Glenair®

MIL-PRF-24758A

SHIPBOARD INTERCONNECT AND CONDUIT SOLUTIONS

DLA / US NAVY APPROVED FOR TOPSIDE APPLICATIONS

NOVEMBER 2013

Glenair MIL-PRF-24758A*
"BlueJacket" Topside Conduit

Do It Once, Do It Right!

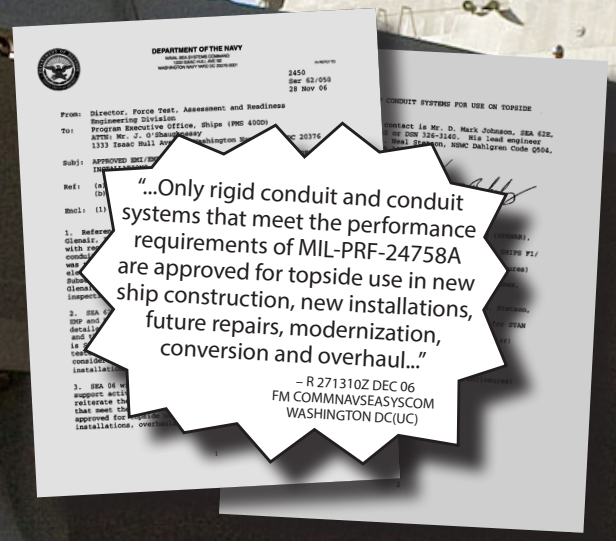

"...Only rigid conduit and conduit systems that meet the performance requirements of MIL-PRF-24758A are approved for topside use in new ship construction, new installations, future repairs, modernization, conversion and overhaul..."

– R 271310Z DEC 06
FM COMMNAVSEASYSCOM
WASHINGTON DC(UC)

BLUEJACKET

A Seaman in the United States Navy, and the brand name of the Glenair MIL-24758A(SH) Weatherproof EMI Shielded Flexible Conduit System. Although haze gray in color, the product is named *"BlueJacket"* in honor of the dedicated Navy personnel who work with these products under arduous topside conditions.

***Glenair Still Manufactures and Stocks Legacy MIL-C-24758 Conduit Systems and Fittings. See www.glenair.com.**

"BlueJacket" Shipboard Connector and MIL-PRF-24758A Conduit Solutions

Table of Contents

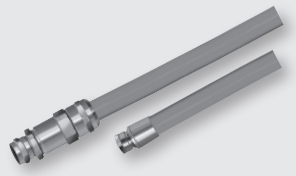

MIL-PRF-24758A EMI/EMP Conduit Systems — A

MIL-DTL-28840 Shipboard Electrical Connectors — B

MIL-PRF-28876 Type Fiber Optic Shipboard Connectors — C

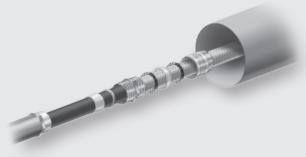

GA-CSGA Cable Shield Grounding Assemblies — D

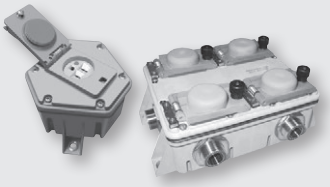

Composite Thermoplastic EMI/EMP Junction Boxes — E

Shipboard Wire and Cable Feedthroughs — F

Appendix: — G

S9407-AB-HBK-010 Shipboard EMI Shielding Practices Handbook
Glenair Qualified GR 2000 and RP2000 Series Fittings
MasterSeal Self-Vulcanizing Tape
Selected Materials and Finishes
Accessory Interface Data

© 2013 Glenair, Inc. CAGE Code 06324 Printed in U.S.A.

GLENAIR, INC. • 1211 AIR WAY • GLENDALE, CA 91201-2497 • 818-247-6000 • FAX 818-500-9912
www.glenair.com
E-Mail: sales@glenair.com

Haze Gray and Underway!

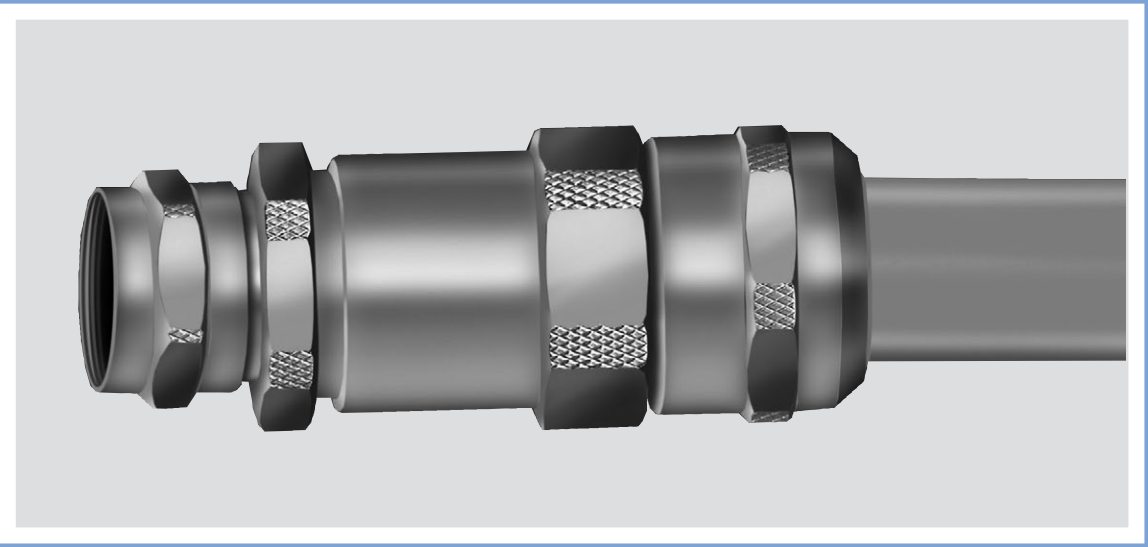

Introducing the Glenair MIL-PRF-24758A *"BlueJacket"* Conduit System

Most topside shipboard conduit users have simple expectations, such as conduit fittings that don't leak or corrode and will last for the full lifetime of a ship. They also want jacket materials that can withstand high heat, extreme UV radiation, demanding weather conditions and caustic chemicals and fluids.

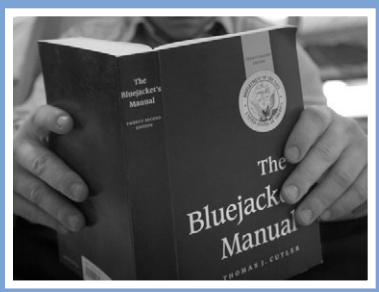

Glenair's U.S. Navy qualified MIL-PRF-24758A conduit system delivers on these expectations–*and a whole lot more.* Our shielded brass conduit meets all EMI shielding and surface transfer impedance requirements. Our jacket material, which we've named "*BlueJacket"* in honor of the dedicated Navy personnel who work with these products in arduous conditions on a daily basis, is a special formula that exceeds all the specifications of MIL-PRF-24758A. These demanding requirements include UV weathering, temperature tolerance, low smoke and toxicity index, flame resistance, and halogen free (IEC754-1) ratings.

And that's not all. Our unique fitting design provides the easiest assembly and the most reliable performance ever in topside conduit systems—no more loosening, no more leaks, no more corrosion, and no more costly replacement of relatively new components that failed to withstand the harsh environmental challenges of shipboard use.

So whether your requirements call for factory terminated M24758A assemblies with lightweight soldered fittings, or field terminated bulk conduit, adapters and fittings, Glenair *BlueJacket* is "Haze Gray and Underway" and more than ready to exceed all your expectations.

Glenair®

1211 Air Way
Glendale, California 91201-2497
Telephone: 818-247-6000 · Facsimilie: 818-500-9912 · EMail: sales@glenair.com
www.glenair.com

MAY-16-2006 13:49 DSCR RICHMOND VA P.01

DEFENSE LOGISTICS AGENCY
DEFENSE SUPPLY CENTER RICHMOND
8000 JEFFERSON DAVIS HIGHWAY
RICHMOND, VIRGINIA 23297-5100

IN REPLY REFER TO DSCR-FAEBA

April 21, 2006

Glenair, Inc.
1211 Air Way
Glendale, Ca. 91201

Gentlemen:

Reference SP0406-06-M-D039, NSN 5975-01-525-3170, First Article Test Report.

The First Article Test Report has been reviewed/evaluated and determined to be acceptable. You are authorized to commence with production of referenced order.

If you need further assistance in this matter, please contact Irene Baskerville/DSCR-FAEBA/ 804-279-6311 or FAX 804-279-3377.

Sincerely,

IRENE P. BASKERVILLE
Acquisition Specialist
Electrical Components IST

cc:
DCMA Los Angeles

Department of the Navy
MIL-PRF-24758A (SH)
Qualification Approval Letter

DEPARTMENT OF THE NAVY
NAVAL SEA SYSTEMS COMMAND
1333 ISAAC HULL AVE SE
WASHINGTON NAVY YARD DC 20376-0001

IN REPLY TO

2450
Ser 62/050
28 Nov 06

From: Director, Force Test, Assessment and Readiness Engineering Division
To: Program Executive Office, Ships (PMS 400D)
ATTN: Mr. J. O'Shaughnessy
1333 Isaac Hull Ave SE, Washington Navy Yard, DC 20376

Subj: APPROVED EMI/EMP CONDUIT SYSTEMS FOR USE ON TOPSIDE INSTALLATIONS

Ref: (a) SEA 62 Memorandum 2450 Ser 06/021 of 29 Jan 04
(b) SEA 62 Letter 2450 Ser 06/055 of 18 Nov 05

Encl: (1) Consolidated Glenair MIL-PRF-24758A Test Report QTR M24758 of 25 Apr 06
(2) Lothar O. Hoeft, PHD, Report, "Foranne MIL-PRF-24758A Conduit Assembly Surface Transfer Impedance Test" of 5 Jul 06 and as revised, 27 Aug 06

1. Reference (a) provided SEA 62E technical review of the Glenair, Inc "First System" conduit testing and documentation with regard to its equivalency to the Entraco "Sea-FROST™" conduit and Termination System. SEA 62E's technical assessment was that the Glenair "First System" product was mechanically and electrically equivalent to the Entraco "Sea-FROST™" system. Subsequently, in response to the issuance of MIL-PRF-24758A(SH), Glenair developed a MIL-PRF-24758A product line. Test and inspection results were provided in enclosure (1).

2. Reference (b) provided the SEA 62E technical review of the Foranne Manufacturing, Inc conduit and components test reports as compared to the MIL-PRF-24758A requirements and recommended that additional testing be conducted to meet the performance requirements of MIL-PRF-24758A. The results of this additional testing were provided in enclosure (2).

3. SEA 62E, the technical warrant holder for EMI Control, EMC, EMP and RADHAZ for ships and submarines, has completed a detailed technical review of enclosures (1) and (2). Based on this review and the previous review noted in reference (b), it is SEA 62E's assessment that the Foranne Inc "Shield Right" and the Glenair MIL-PRF-24758A products tested meet the performance requirements of MIL-PRF-24758A and are considered acceptable to

© 2013 Glenair, Inc.

Subj: APPROVED EMI/EMP CONDUIT SYSTEMS FOR USE ON TOPSIDE INSTALLATIONS

use for EMI/EMP control on topside installations onboard US Navy ships.

3. SEA 06 will provide this information to the Fleet and its support activities via Naval message. This message will also reiterate the policy that only rigid conduit and conduit systems that meet the performance requirements of MIL-PRF-24758A are approved for topside use in new ship construction, new installations, overhauls and modernization.

4. The SEA 06 point of contact is Mr. D. Mark Johnson, SEA 62E, Commercial (202) 781-3140 or DSN 326-3140. His lead engineer for MIL-PRF-24758A is Mr. Neal Stetson, NSWC Dahlgren Code Q504, (540) 653-3470 or DSN 249-3470.

VANCE A. BRAHOSKY

Copy to:
Commander, Space and Naval Warfare Systems Command (SPAWAR), San Diego, CA (w/o Enclosures)
PEO SHIPS, Washington, DC (PMS 400D/J, Odum, R Popp, SHIPS F1/ S. Brown, SHIPS FRC/E. Littig) (w/o Enclosures)
PEO IWS, Washington, DC (IWS1C/LT M. Shine) (w/o Enclosures)
PEO CARRIERS, Washington, DC (w/o Enclosures)
PEO LMW, Washington, DC (CHENG/P. Hagan, PMS 495/G. Humes, CAPT J. Spitz, K. Haas) (w/o Enclosures)
PEO C4I and SPACE, San Diego, CA (w/o Enclosures)
Commander, NSWC Dahlgren, Dahlgren, VA (Code Q504/N. Stetson, Code Q54/G. Winters)
Commander, NSWC Dahlgren, Dahlgren, VA (R. Zanella (for STAN Data Base)) (w/o Enclosures)
Northrop Grumman Ship Systems, Washington DC (N. Buffler) (w/o Enclosures)
Glenair Inc, Glendale CA (D. Holden) (w/o Enclosures)
Foranne Manufacturing Inc, Ivyland PA (M. Magness) (w/o Enclosures)
GDIT, Washington DC (M. Craig, A. Church) (w/o Enclosures)
GDIT, Dahlgren VA (B. Ayers) (w/o Enclosures)

© 2013 Glenair, Inc.

What Ever Happened to the MIL-*C*-24758 EMI/EMP Conduit System?

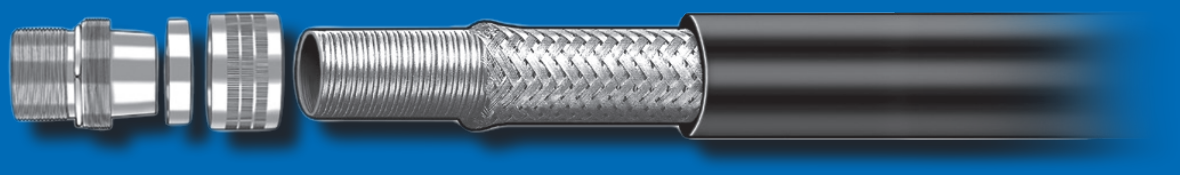

Answer: This venerable metal-core conduit wire routing and protection system has been *superseded* by the new MIL-PRF-24578A(SH) standard. For all new applications, the U.S. Navy requires engineers to specify only MIL-PRF-24578A(SH) conduit, fittings and adapters. But for repair of existing systems, Glenair still manufactures and stocks the complete line of MIL-C-24758 conduit products. For complete order information on any of the parts listed below, please visit our website: www.glenair.com.

- **M24758/1 EMI/EMP Shielding Conduit**
- **M24758/2 Straight Conduit Fitting**
- **M24758/3 45° Conduit Fitting**
- **M24758/4 90° Conduit Fitting**
- **M24758/5 Conduit-to-Panel Fitting**
- **M24758/6 Conduit-to-Threaded Pipe Fittings**
- **M24758/7 Conduit-to-Stuffing Tube Fitting**
- **M24758/8 Conduit-to-Conduit Fitting**
- **M24758/9 Adapter for MIL-DTL-5015 Series 3100 Connectors**
- **M24758/10 Adapter for Triaxial Connectors**
- **M24758/11 Adapter for Coaxial Connectors**
- **M24758/12 Adapter for MIL-C-26482 Series I Connectors**
- **M24758/13 Adapter for Connectors with MS3155 Interface**
- **M24758/14 Adapter for MIL-C-28840 (EC) Backshells**
- **M24758/15 Adapter for MIL-C-24235 Stuffing Tubes**
- **M24758/16 Adapter for Miscellaneous Fittings**
- **M24758/17 Adapter for Tapered Pipe Thread**
- **M24758/18 Adapter for Straight Pipe Thread**
- **M24758/19 Adapter for Panel Termination**

Glenair *BlueJacket* Product Line Overview

MIL-PRF-24758A(SH) Qualified
Flexible Waterproof Shielded Shipboard Conduit System

Product Features

- **Qualified to MIL-PRF-24758A(SH)**
- **Brass Metal-Core Conduit with EMI Shielding and Durable Glenair *"BlueJacket"* Covering**
- **Innovative Stainless Steel Fittings with Advanced Environmental Sealing, EMI Shield Termination and Rotatable Coupling Nut**
- **Available Adapters for all Shipboard Interfaces**
- **Fully Compatible with Legacy MIL-C-24758 Conduit Systems and Adapters (Still Available from Glenair)**
- **Corrosion-Resistant 316L Stainless Steel Eliminates Maintenance Cycles and Reduces Assembly Time**

"Only Rigid Conduit and Conduit Systems that Meet the Performance Requirements of MIL-PRF-24758A are Approved for Topside Use..."

-U.S. DEPARTMENT OF THE NAVY

When we set out to design an innovative conduit system to meet the requirements of the new MIL-PRF-24758A specification, we had a simple goal in mind: create a conduit system which was easy to install, easy to maintain and tough enough to perform in even the harshest ocean environments. The results couldn't be better. Our new qualified MIL-PRF-24758A Conduit system with its *"BlueJacket"* weatherproof jacketing exceeds the performance specifications for improved waterproof sealing, improved corrosion protection, and improved electromagnetic shielding. In fact, we believe no other conduit system can match the quality and performance of our new *"Bluejacket"* system. The U.S. Navy has cast its vote: Glenair's MIL-PRF-24758A conduit systems are the first products approved by the Navy under the new specification for topside use in new ship construction, new installations, future repairs, overhauls and modernization. The refrence message is COMNAVSEASYSCOM 2713107 December 06.

Glenair's *"BlueJacket"* weatherproof conduit is halogen free, flame resistant, and functional to 260˚C. *"BlueJacket"* far surpasses the accelerated solar weathering standards under IEC 60068-2-5. Glenair's *"BlueJacket"* tested to 56 accelerated days, equivalent to 53 years of solar exposure. Our new fittings and adapters are equally impressive. The nickel plated 316L stainless steel components are equipped with rotatable couplings to simplify field installation. The design also offers improved environmental sealing and improved metal-to-metal termination of EMI shielding.

© 2013 Glenair, Inc. CAGE Code 06324 Printed in U.S.A.

GLENAIR, INC. • 1211 AIR WAY • GLENDALE, CA 91201-2497 • 818-247-6000 • FAX 818-500-9912
www.glenair.com
E-Mail: sales@glenair.com

Glenair MIL-PRF-24758A Conduit Component Selection Guide

This selection guide is designed to assist you with the selection of components and planning for installation of MIL-PRF-24758A(SH) conduit and fittings. Per current U.S. Navy policy, only MIL-PRF-24758A qualified systems are now approved for topside use. To cross over part numbers from other manufacturers or the original MIL-C-24758 specification, please contact the factory at (818) 247-6000.

Each point-to-point conduit assembly will require a length of bulk conduit, 2 conduit fittings (M24758-2, -3, or -4) and 2 adapters (M24758-9 through M24758-25). You have three basic options for putting all these parts together:

(1) Specify user installable components (bulk lengths of conduit, fittings and adapters designed for field assembly),

(2) Select made-to-order conduit assemblies built at the factory according to your exact size, length and routing requirements, or

(3) Use a combination approach in which one end of the conduit is terminated at the factory with lightweight solder fittings, while the other end is terminated in the field with user installable fittings and adapters.

Step 1: Select Correct Conduit Size

Conduit size is identified by its inside diameter (ID). The ID is referenced with a size code. The range of available sizes includes .25 inch (M24758-A) through 3.0 inch (M24758-L).

Conduit is normally filled at up to 90% of it's inside diameter. Verify the cable diameter used before selecting the conduit diameter. Low smoke shipboard cable (MIL-C-24643) may have a thicker jacket material than regular (MIL-C-915 and MIL-C-24640) cables and require larger diameter conduit and fittings, so be sure to take this into account.

The shipboard interface, i.e. the diameter of the stuffing tube on the ship the conduit assembly will attach to, is the other key data point for conduit size selection. In a well-designed system, the diameter of the conduit, fitting, adapter and stuffing tube all need to be the same. For example, a size code "D" (1 inch)

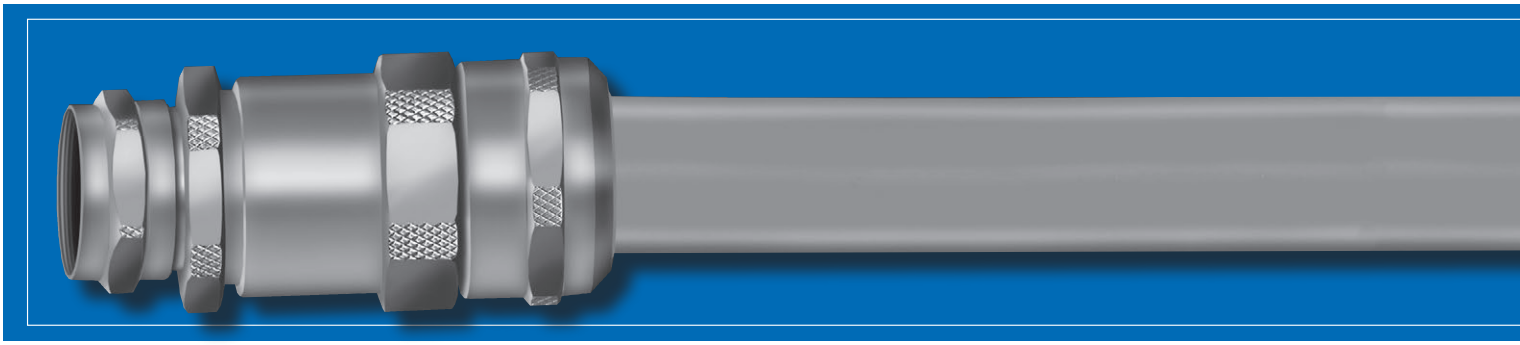

Stainless steel M24758 fittings for field termination and assembly are supplied in straight, 45° and 90° designs. Glenair MIL-PRF-24758A qualified fittings feature unique metal-to-metal shield termination, robust environmental sealing, and a rotatable coupling for easy attachment of M24758 series adapters. Both the environmental sealing and EMI shielding functions incorporate design ideas adapted from military standard backshells, including environmental o-rings, cable-sealing glands and cone-and-ring style shield terminations.

© 2013 Glenair, Inc.

GLENAIR, INC. • 1211 AIR WAY • GLENDALE, CA 91201-2497 • 818-247-6000 • FAX 818-500-9912
www.glenair.com E-Mail: sales@glenair.com

conduit would be selected when the stuffing tube on the ship is also 1 inch in diameter.

NOTE 1: The color of Mil-PRF-24758A conduit is standard US Navy haze gray in accordance with Fed Std 595B #26270. If other colors are desired, contact the factory at (818) 247-6000.

NOTE 2: Conduit internal dimensions 3/8", 5/8", and 3" have been omitted from the MIL-PRF-24758A specification. Products using these dimensions, built to the same standards, are still available from Glenair.

NOTE 3: The operating temperature variant of the M24758A jacket material used on the conduit is -70°C to + 200°C. For higher temperature materials, contact the factory.

Step 2: Select Conduit Fittings

The function of the M24758 conduit fitting is to terminate M24758 flexible shielding conduit and to provide a standard thread for attaching M24758-9 through M24758-24 adapters. Fittings are supplied in straight, 45° and 90° configurations to facilitate the routing of the conduit into and out of kick-pipes and other interfaces to the ship. Selection is a simple matter of matching the size code in the part number with the size code of the selected conduit. Your selection of a straight, 45° or 90° angled part will depend on the routing requirements of your system.

NOTE 1: All conduit fittings and adapters feature a combination of hex wrench flats and knurls to minimize the need for special installation tools.

NOTE 2: Glenair recommends the use of torque wrenches to ensure conduit fittings and adapters are mated with the optimal amount of torque. Torque wrenches required for installation are available from Glenair. Please see page 55 for tool order information.

All conduit fittings and adapters are matte finished, nickel plated, 316L stainless steel. If other materials are desired, contact the factory.

Step 3: Select Appropriate Adapters

As noted, the conduit fittings selected in step 2 provide a standard thread for the attachment of various adapters. The adapters are used to mate the conduit assembly to the many interfaces found on the ship, such as stuffing tubes or kick-pipes with tapered

Flexible bulk conduit is supplied with a brass metal core, phosphorus bronze metal overbraiding and Glenair "BlueJacket" outer jacketing material which has been optimized for shipboad and other harsh application environments.

Factory terminated conduit fittings provide the ultimate flexibility in system specification. The lightweight solder fittings mate to all M24758 adapters and offer a maintenance-free alternative to user installed fittings.

© 2013 Glenair, Inc.

GLENAIR, INC. • 1211 AIR WAY • GLENDALE, CA 91201-2497 • 818-247-6000 • FAX 818-500-9912
www.glenair.com
E-Mail: sales@glenair.com

NPT threads. Adapters are also available to facilitate mating of the conduit assembly to various military standard cylindrical connectors. The following are a selection of the standard adapters covered by MIL-PRF-24758A and supplied by Glenair:

1. Stuffing tube adapter (AKA swage tube or kick pipe adapter): These adapters are identified by the stuffing tube size and conduit diameter. See the M24758-15 drawing.

2. Panel adapter (AKA junction box adapter or interconnecting box adapter): These adapters are identified by the conduit size. The required mounting hole size is shown on M24758-19 and 25 adapters.

3. NPT adapter (AKA tapered pipe thread adapter): These adapters are identified by the NPT thread size and conduit size. See the M24758-17.

4. NPSM adapter (AKA National Pipe Thread Standard adapter): These adapters are identified by the NPSM thread and conduit size. See the M24758-18 drawing.

5. Splice (AKA conduit union adapter): These adapters are used, in conjunction with M24758-2 fittings, to join two sections of conduit together. See the M24758-23 drawing.

6. MS3100 Series MIL-C-5015 Connector adapter: These adapters are used with the obsolete MS3100 series solder style connectors. See the M24758-9 drawing.

NOTE 1: Do not use the M24758-9 series adapters for MS3400 and MS3450 crimp contact connectors. See item 10 below.

NOTE 2: Glenair recommends replacing MS3100 series connectors (and M24758-19 adapters) with the MS3400 series connectors and M24758-13 series adapters.

7. Triaxial connector adapter: These adapters connect the conduit fitting to triaxial connectors. Contact the factory for the order information.

8. Coaxial connector adapter: These adapters connect the conduit fitting to coaxial RF connectors. See the M24758-11 drawing.

9. MIL-C-26482 connector adapter: These adapters connect the conduit fitting to the obsolete MIL-C-26482, series 1 connectors. See the M24758-12 drawing.

NOTE 1: Glenair recommends replacing MS312X series connectors (and M24758-12 adapters) with the MIL-C-26482 series 2, MS347X connectors (and M24758-13 series adapters).

10. MIL-C-5015, MIL-C-26482, MIL-C-81703 and MIL-C-83723 series crimp contact connector adapter: These adapters connect the conduit fitting to MS3400, MS3450 and other MIL-C-5015 crimp style connectors, and MS347X, MIL-C-26482 series connectors. See the M24758-13 drawing.

11. MIL-C-28840 connector adapter: These adapters connect the conduit fitting to MIL-C-28840 series connectors. See the M24758-14 drawing.

12. MIL-D-38999 series connector adapters: These adapters connect the conduit fitting to MS 27XXX, series 1 and 2, and D38999 series III and IV connectors. See the M24758-20 drawing.

13. MIL-C-22992 series connector adapters: These adapters connect the conduit fitting to M1734X connectors. See the M24758-21 drawing. Contact factory for MIL-C-22992 Class L connector adapters.

14. Glenair Series 22 adapter: These adapters connect the conduit fitting to Glenair Series 22 connectors. See the M24758-22 drawing.

15. Multiple shield termination adapters: These adapters provide a shield termination mechanism for individual wire shields. See the M24758-24 drawing.

MIL-PRF-24758-25 Through -57

The MIL-PRF-24758 specification continues to grow. Each new dash number solves an additional interconnect challenge. Glenair is qualified on every one, and is the only comprehensive source for these critical components which handle all aspects of wire and cable routing and protection in topside naval applications. Got a conduit problem? Glenair technical support and procurement specialists are available around the clock, when and where you need us.

© 2013 Glenair, Inc.

Glenair *BlueJacket*
U.S. Navy Qualified Jacketing Material
Material Specification

Glenair has developed and qualified a new formula jacketing material, which we are calling *"BlueJacket"* in honor of the men and women of the U.S. Navy who work with these products in ardous conditions on a daily basis. The material is low smoke, halogen free, high UV tolerant, and meets both U.S. Navy and aerospace fluid requirements. The color of Mil-PRF-24758A *"BlueJacket"* conduit is standard US Navy haze gray in accordance with Fed Std 595B #26270. If other colors are desired, contact the factory at (818) 247-6000. The material has the following performance characteristics:

GLENAIR *"BLUEJACKET"* TESTING
Temperature rating: -40°C to +260°C (with excursions to 290°C) Per MIL-PRF-24758A.
Halogen free per IEC 60614-1. Less than 5mg of HCL per 1 gm of product tested.
Accelerated Weathering (Solar) per IEC 60068-2-5; 56 days exposure (Equivalent to 50 years in the sun).
Flame Resistant per IEC 60614-1; Material does not sustain combustion when the source of flame is removed.
Low Smoke Index per NES 711 (11.75); Minimum standard is 25. The Glenair tested level is 11.75. This makes the material acceptable for interior applications as well as topside use.
Smoke Density Class F1 Per NF F 16-101 IAW DIN EN 60695-2-11:2001
Toxicity Index per NES 713 (1.9); Minimum standard is 5. The Glenair tested level is 1.9. This makes the material acceptable for interior applications as well as topside use.
Colorable to Fed Std 595B
Markable IAW MIL-PRF-24758A
Oxygen Limiting Index = 45.1 Per EN ISO 4589-2:1999; Minimum is 28.
12 Sec Vertical Burn: (Pass) Per 14CFR Part 25.853(a) AMDT 25-116 App F Part 1 (a)(1)(ii)
Fluids Per MIL STD 810F, Method 504
Fuel (MIL-T-83133): JPG
Hydraulic Fluid (MIL H 5606): ROYCO 756
Lube Oil (MIL-L-23699): ROYCO-500
Cleaner (MIL-C-85570): CALLA-855
Solvent (Isopropyl Alcohol): TT-I-735
De Icer (AMS-1432): E36 Runway Deicer
Coolant (MIL-C-87252): Coolanol 25R
Fire Extinguishant Foam: AMEREX AFFF
ASTM E 595 Vacuum Outgassing: Post Bake results; TML.06%, CVCM .006%, WVR .02%.
NAWC Lakehurst Amphib VLA flexible conduit JSF high temperature tests (600 deg F).
Fungus Resistance testing (Rating of 0) per MIL:-SRD-810F, Method 508.5.
ASTM D624 Die B tear test: 150kN/m.
Cold Bend -65°C, IAW TP 972-7103TP-1 No crazing or cracks.

© 2013 Glenair, Inc.

GLENAIR, INC. • 1211 AIR WAY • GLENDALE, CA 91201-2497 • 818-247-6000 • FAX 818-500-9912
www.glenair.com E-Mail: sales@glenair.com

Glenair®

Now Available: **New Ultra-Lightweight Qualified MIL-PRF-24758A(SH) Conduit Fittings**
About 40% Weight Reduction • Select Styles and Sizes

A Marriage of Lightweight Composite Thermoplastic and Stainless Steel Provides About 40% Weight Reduction on a Select Group of Qualified MIL-PRF-24758A (SH) Conduit Fitting Styles and Sizes

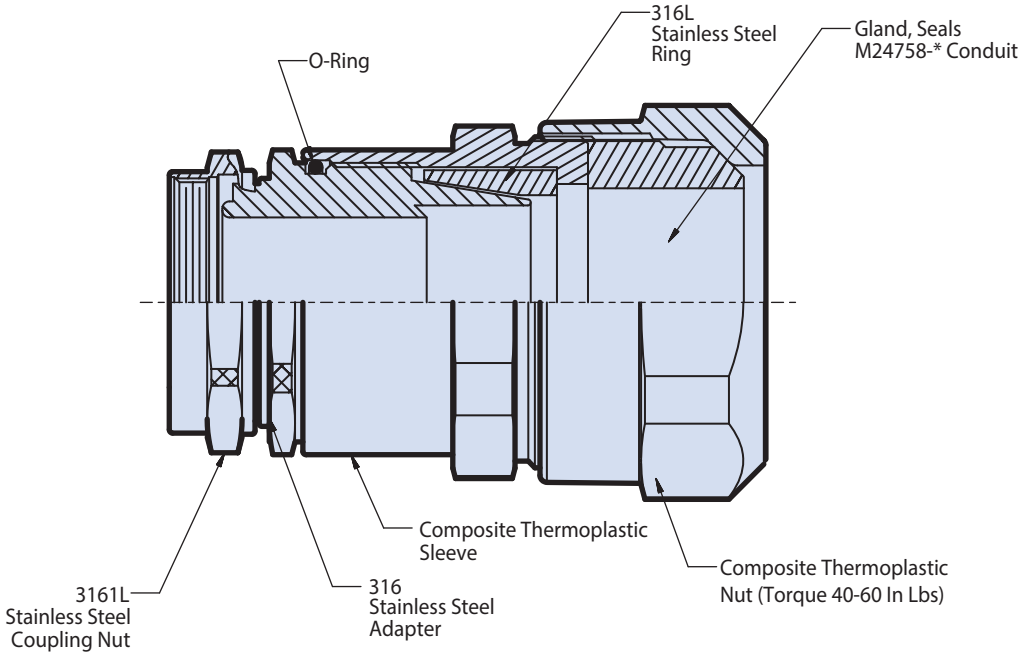

Typical Distribution of Materials
Comprising the New Ultra-Lightweight
MIL-PRF-24758A(SH)
Conduit Fittings

© 2013 Glenair, Inc.

GLENAIR, INC. • 1211 AIR WAY • GLENDALE, CA 91201-2497 • 818-247-6000 • FAX 818-500-9912
www.glenair.com **E-Mail: sales@glenair.com**

Now Available: New Ultra-Lightweight Qualified MIL-PRF-24758A(SH) Conduit Fittings

About 40% Weight Reduction • Select Styles and Sizes

Glenair®

How to Order the Qualified New Ultra-Lightweight MIL-PRF-24758 A(SH) Conduit Fittings

Basic Number	Conduit Size Code *(Table I)*	*L = Composite Sleeve and Nut Supplied (Color Grey)*
M24758-2	C	L

Be Sure to Add the "L"

The New Ultra-Lightweight MIL-PRF-24758A(SH) Conduit Fittings are available

ONLY IN THE FOLLOWING DASH NUMBERS AND SIZE CODES:

DASH NUMBERS:

-2L, -3L, 4L, 5L, 6L, 7L, 8L, 39L, 40L, 41L, 43L, 44L, 45L, 46L, 47L, 48L, 52L, 53L, 54L, 56L, 57L

SIZE CODES:

A, B, C, D, E, J, K

Materials / Finish:

Adapter, Coupling Nut and Ring – 316L Stainless Steel/ Nickel Plating, Grey Color.

Sleeve and Nut – Composite Thermoplastic/Grey Color

O-Ring and Gland – Silicone Rubber/N.A.

© 2013 Glenair, Inc.

GLENAIR, INC. • 1211 AIR WAY • GLENDALE, CA 91201-2497 • 818-247-6000 • FAX 818-500-9912
www.glenair.com E-Mail: sales@glenair.com

Glenair MIL-PRF-24758A(SH) Qualified Conduit-to-Conduit Fitting
Termination Instructions

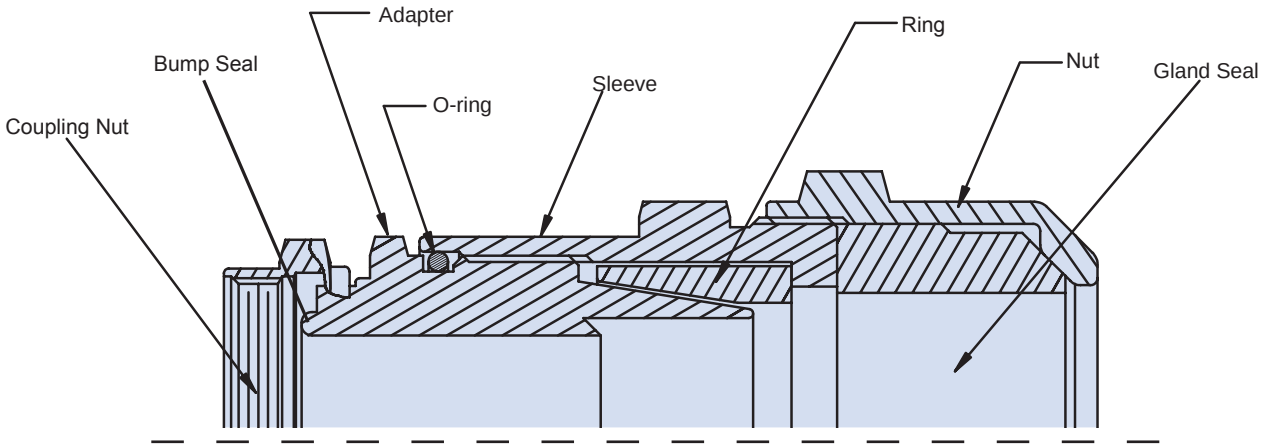

Tools:

Tin snips or scissors capable of trimming conduit and braid
Hacksaw, chop saw or tubing cutter
Anti Seize Compound such as NSN 8030-01 450 4009 Tef Gel
Razorblade
Adjustable wrench (Rigid E110 or similar)
Silicone O-ring lube
Vice or second wrench
Needle-nose pliers

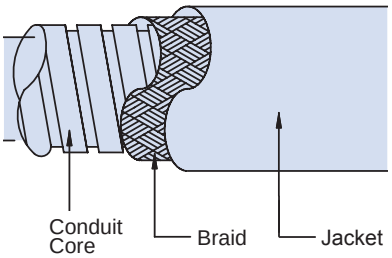

Preassembly instructions: Disassemble fitting and ensure all thread engagements are smooth and burr free. Lubricate gland and O-ring with silicone lube.

1. Measure conduit to desired length (better long than short) and cut to length.

2. Using snips, trim end of conduit, braid and jacket. Ensure all bent edges are removed or smoothed.

3. Slide sleeve, nut and gland seal up conduit (out of way).

4. Using ring as a guide, cut jacket back 1/4” (6.35mm) wider than ring.

5. Slide ring over braid to edge of jacket.

6. Insert cone portion of adapter under braid and ring over conduit core. Apply anti seize to threads.

7. Slide sleeve down conduit and engage threads on adapter. Tighten sleeve until it bottoms out against adapter. O-ring should not be visible.

8. Slide gland seal and nut down to engage thread on sleeve. Tighten until only a small portion of blue gland 1/32” (.793mm) seal is visible above nut.

© 2013 Glenair, Inc. CAGE Code 06324 Printed in U.S.A.

MIL-PRF-24758-*
EMI/EMP Shielding Conduit
with Glenair *BlueJacket*

Basic Number	Conduit Size Code *(Table I)*	High Temp Option *(See Note 4)* *Omit for Standard*
M24758 -	G	H

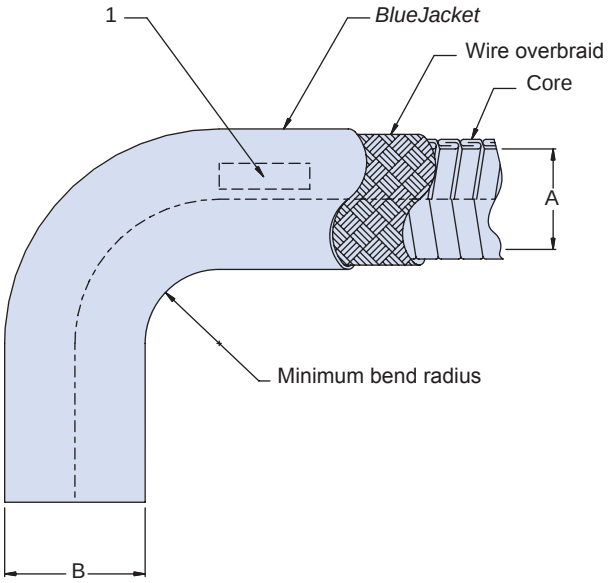

TABLE I

CONDUIT SIZE CODE	A I.D. MIN	B O.D. MAX	MINIMUM BEND RADIUS
A	.25 (6.35)	.62 (15.748)	1.25 (31.75)
B	.50 (12.7)	.89 (22.606)	2.50 (63.5)
C	.75 (19.05)	1.14 (33.06)	3.75 (95.25)
D	1.00 (25.4)	1.45 (36.83)	5.00 (127.0)
E	1.25 (31.75)	1.70 (43.2)	6.25 (158.75)
F	1.50 (38.1)	1.95 (49.53)	7.50 (190.5)
G	2.00 (50.8)	2.48 (62.992)	10.00 (254.0)
H	2.50 (63.5)	2.98 (75.692)	12.50 (317.5)
J	.37 (9.398)	.74 (18.796)	2.00 (50.8)
K	.62 (15.748)	1.02 (25.908)	3.00 (76.2)
L	3.00 (76.2)	3.48 (88.392)	15.00 (381.0)

APPLICATION NOTES

1. Conduit identified with M24758-* Glenair *"BlueJacket"* halogen free. Marking shall be applied on the conduit jacket. "*" = Conduit Size code.
2. Material:
   Core - Brass
   Wire overbraid - Phosphorus bronze
   Jacket - Glenair *BlueJacket* (U.S. Navy haze grey color).
3. Metric dimensions (mm) are indicated in parentheses.
4. MIL-PRF-24758A operating temperature range: -40°C to + 125°C. (Select Designator "H" for for high temperature *BlueJacket* option, -65°C to +260°C.)

© 2013 Glenair, Inc.

GLENAIR, INC. • 1211 AIR WAY • GLENDALE, CA 91201-2497 • 818-247-6000 • FAX 818-500-9912
www.glenair.com
E-Mail: sales@glenair.com

MIL-PRF-24758-2
Straight Conduit Fitting

DID YOU KNOW?

You Can Also Order a Lightweight Version of this Conduit Fitting Only in Size Codes **A**, **B**, **C**, **D**, **J** and **K** Just By Adding **"L"** to the Part Number

Basic Number	Conduit Size Code *(Table I)*	
M24758-*	C	L

L = Composite Sleeve and Nut Supplied (Color Grey)

Basic Number	Conduit Size Code *(Table I)*
M24758-2	C

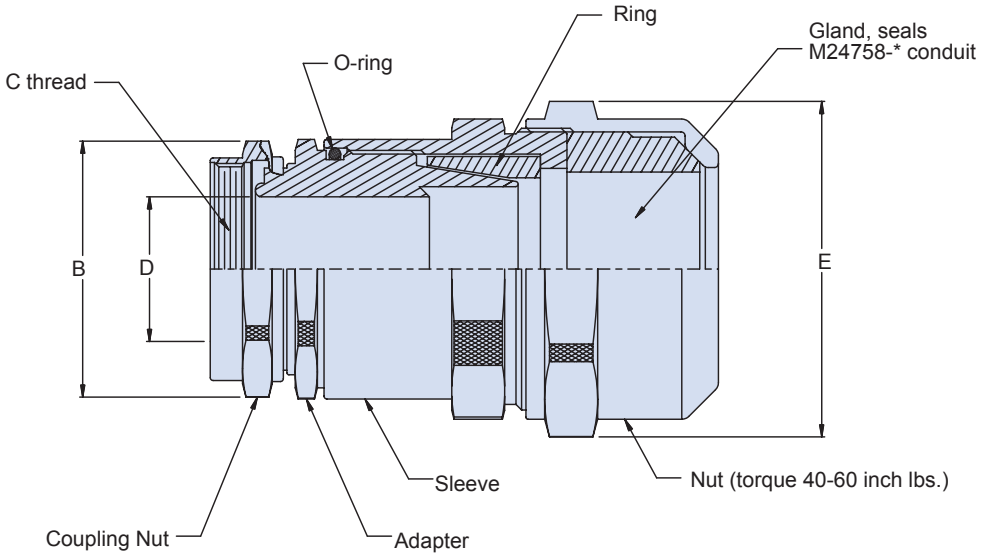

APPLICATION NOTES

1. Assembly identified with manufacurer's code identification number (Glenair, part number and classification code 490).
2. The function of the M24758-2 fitting is to terminate M24758-* flexible sheilding conduit and to provide a standard thread for attaching all M24758-9 through M24758-21 fittings.
3. Material / Finish:
   Adapter, nuts, sleeve & ring - 316 / electroless nickel, matte finish.
   O-ring and gland - silicone rubber / NA.
4. Metric dimensions (mm) are indicated in parentheses.

© 2013 Glenair, Inc.

GLENAIR, INC. • 1211 AIR WAY • GLENDALE, CA 91201-2497 • 818-247-6000 • FAX 818-500-9912
www.glenair.com
E-Mail: sales@glenair.com

TABLE I				
CONDUIT SIZE CODE	C CLASS - 2B THREAD	B DIA MAX	D DIA MIN	E DIA MAX
A	.438-28 UNEF	.88 (22.35)	.245 (6.22)	1.18 (29.97)
B	.688-24 UNEF	1.13 (28.70)	.495 (12.57)	1.45 (36.83)
C	.938-20 UNEF	1.38 (35.05)	.745 (18.92)	1.79 (45.47)
D	1.250-18 UNEF	1.69 (42.93)	.995 (25.27)	2.06 (52.32)
E	1.563-18 UNEF	2.00 (50.80)	1.245 (31.62)	2.32 (58.93)
F	1.875-16 UN	2.31 (58.67)	1.495 (37.97)	2.59 (65.79)
G	2.375-16 UN	2.94 (74.65)	1.995 (50.77)	3.26 (82.80)
H	2.875-16 UN	3.44 (87.38)	2.495 (63.37)	3.80 (96.52)
J	.563-24 UNEF	.94 (23.88)	.370 (9.40)	1.32 (33.53)
K	.813-20 UNEF	1.19 (30.23)	.620 (15.75)	1.66 (42.16)
L	3.375-16 UN	3.94 (100.08)	2.995 (76.07)	4.34 (110.24)

TABLE II RECOMMENDED TORQUE			
CONDUIT SIZE CODE	± 5 Inch lbs.		
	C THREAD	SLEEVE	Nut
A	50	120	40-60
B	75	140	40-60
C	100	150	40-60
D	120	170	40-60
E	140	170	40-60
F	150	170	40-60
G	170	170	40-60
H	170	170	40-60
J	50	120	40-60
K	75	140	40-60
L	170	170	40-60

© 2013 Glenair, Inc.

MIL-PRF-24758-3
45° Conduit Fitting

Basic Number	Conduit Size Code *(Table I)*
M24758-3	C

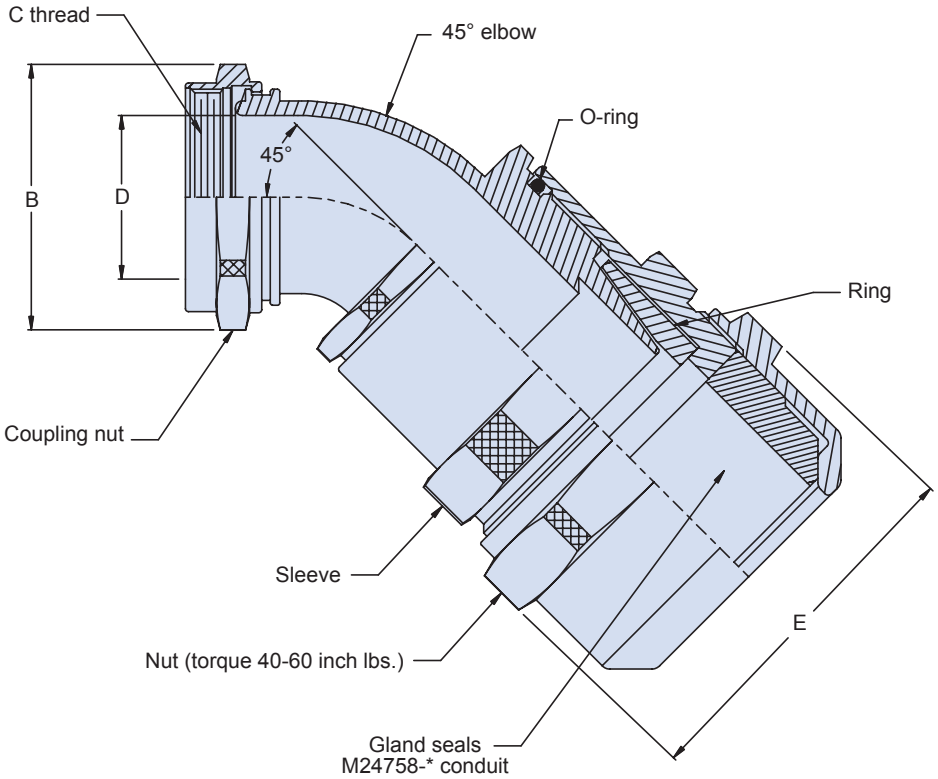

APPLICATION NOTES

1. Assembly identified with manufacurer's code identification number (Glenair, part number and classification code 490).
2. The function of the M24758-3 fitting is to terminate M24758-* flexible sheilding conduit and to provide a standard thread for attaching onto M24758-9 through M24758-25 fittings.
3. Material / Finish:
   Adapter, nuts, sleeve & ring - 316 / electroless nickel, matte finish.
   O-ring and gland - silicone rubber / NA.
4. Metric dimensions (mm) are indicated in parentheses.

© 2013 Glenair, Inc.

GLENAIR, INC. • 1211 AIR WAY • GLENDALE, CA 91201-2497 • 818-247-6000 • FAX 818-500-9912
www.glenair.com
E-Mail: sales@glenair.com

TABLE I				
CONDUIT SIZE CODE	C CLASS - 2B THREAD	B DIA MAX	D DIA MIN	E DIA MAX
A	.438-28 UNEF	.88 (22.35)	.245 (6.22)	1.18 (29.97)
B	.688-24 UNEF	1.13 (28.70)	.495 (12.57)	1.45 (36.83)
C	.938-20 UNEF	1.38 (35.05)	.745 (18.92)	1.79 (45.47)
D	1.250-18 UNEF	1.69 (42.93)	.995 (25.27)	2.06 (52.32)
E	1.563-18 UNEF	2.00 (50.80)	1.245 (31.62)	2.32 (58.93)
F	1.875-16 UN	2.31 (58.67)	1.495 (37.97)	2.59 (65.79)
G	2.375-16 UN	2.94 (74.68)	1.995 (50.67)	3.26 (82.80)
H	2.875-16 UN	3.44 (87.38)	2.495 (63.37)	3.80 (96.52)
J	.563-24 UNEF	.94 (23.88)	.370 (9.40)	1.32 (33.53)
K	.813-20 UNEF	1.19 (30.23)	.620 (15.75)	1.66 (42.16)
L	3.375-16 UN	3.94 (100.08)	2.995 (76.07)	4.34 (110.24)

TABLE II RECOMMENDED TORQUE			
CONDUIT SIZE CODE	± 5 Inch lbs.		
	C THREAD	SLEEVE	Nut
A	50	120	40-60
B	75	140	40-60
C	100	150	40-60
D	120	170	40-60
E	140	170	40-60
F	150	170	40-60
G	170	170	40-60
H	170	170	40-60
J	50	120	40-60
K	75	140	40-60
L	170	170	40-60

© 2013 Glenair, Inc.

MIL-PRF-24758-4
90° Conduit Fitting

Basic Number	Conduit Size Code *(Table I)*
M24758-4	C

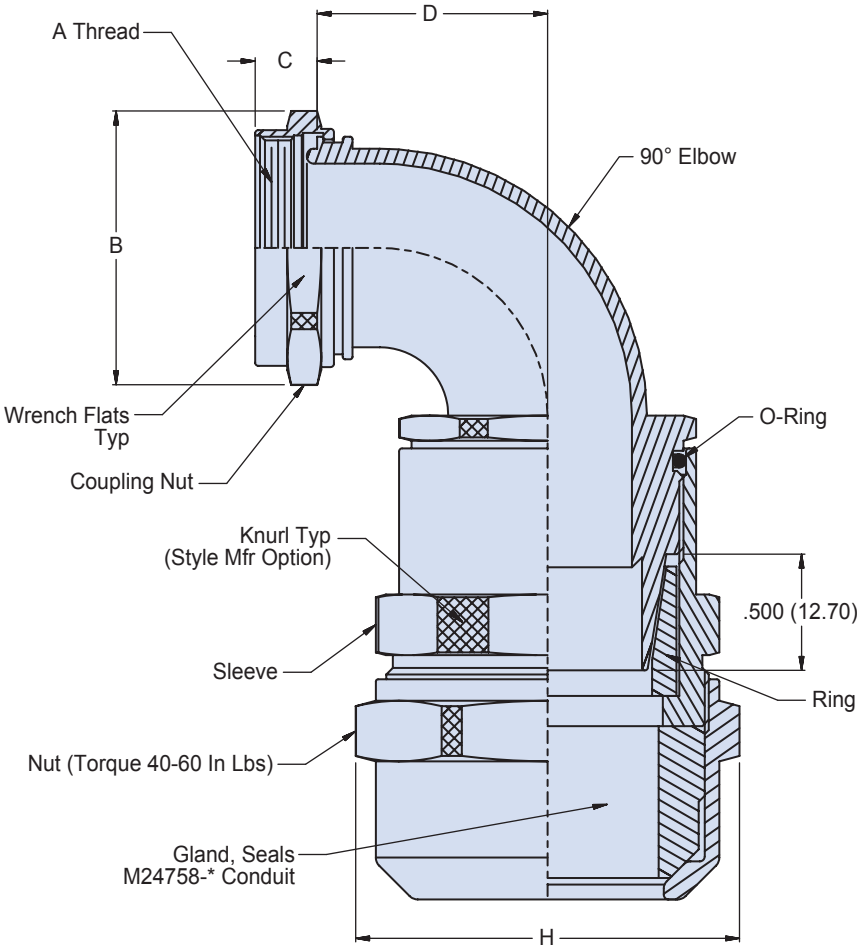

APPLICATION NOTES

1. Assembly identified with manufacurer's code identification number (Glenair, part number and classification code 490).
2. The function of the M24758-4 fitting is to terminate M24758-* flexible sheilding conduit and to provide a standard thread for attaching onto M24758-9 through M24758-25 fittings.
3. Material / Finish:
   Adapter, nuts, sleeve & ring - 316 / electroless nickel, matte finish.
   O-ring and gland - silicone rubber / NA.
4. Metric dimensions (mm) are indicated in parentheses.

© 2013 Glenair, Inc. CAGE Code 06324 Printed in U.S.A.

TABLE I					
CONDUIT SIZE CODE	C CLASS - 2B THREAD	B DIA MAX	C +.00 -.03 DIM	D ± .06 DIM	H MAX DIA
A	.438-28 UNEF	.88 (22.35)	.205 (5.21)	.81 (20.57)	1.18 (29.97)
B	.688-24 UNEF	1.13 (28.70)	.245 (6.22)	1.12 (28.45)	1.45 (36.83)
C	.938-20 UNEF	1.38 (35.05)	.305 (7.75)	1.47 (37.34)	1.79 (45.47)
D	1.250-18 UNEF	1.69 (42.93)	.365 (9.27)	1.81 (45.97)	2.06 (52.32)
E	1.563-18 UNEF	2.00 (50.80)	.365 (9.27)	2.12 (53.85)	2.32 (58.93)
F	1.875-16 UN	2.31 (58.67)	.425 (10.80)	2.50 (63.50)	2.59 (65.79)
G	2.375-16 UN	2.94 (74.68)	.425 (10.80)	3.12 (79.25)	3.26 (82.80)
H	2.875-16 UN	3.44 (87.38)	.425 (10.80)	3.25 (82.55)	3.80 (96.52)
J	.563-24 UNEF	.940 (23.88)	.245 (6.22)	.93 (23.62)	1.32 (33.53)
K	.813-20 UNEF	1.19 (30.23)	.305 (7.75)	1.25 (31.75)	1.66 (42.16)
L	3.375-16 UN	3.94 (100.08)	.425 (10.80)	4.50 (114.30)	4.34 (110.24)

TABLE II RECOMMENDED TORQUE			
CONDUIT SIZE CODE	± 5 Inch lbs.		
	C THREAD	SLEEVE	Nut
A	50	120	40-60
B	75	140	40-60
C	100	150	40-60
D	120	170	40-60
E	140	170	40-60
F	150	170	40-60
G	170	170	40-60
H	170	170	40-60
J	50	120	40-60
K	75	140	40-60
L	170	170	40-60

© 2013 Glenair, Inc.

MIL-PRF-24758-5
Straight Conduit to Panel Fitting

Basic Number	Conduit Size Code *(Table I)*
M24758-5	C

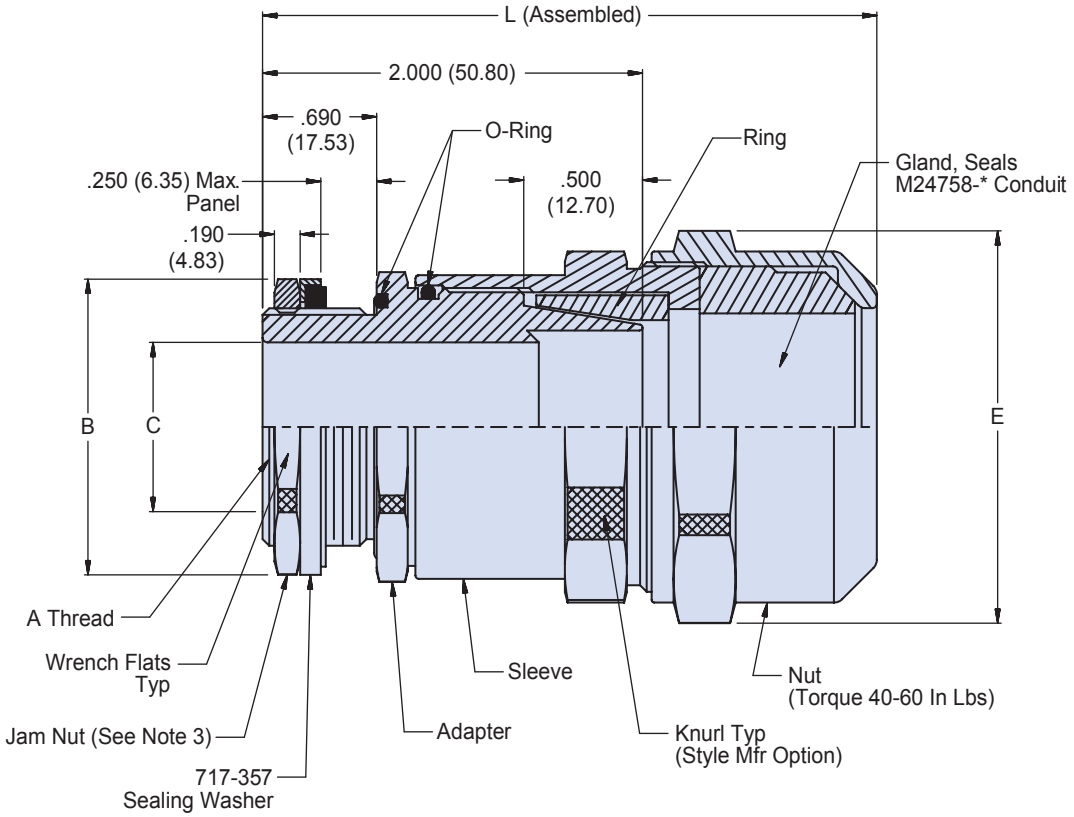

APPLICATION NOTES

1. Assembly identified with manufacurer's code identification number (Glenair, part number and classification code 490).
2. The function of the M24758-5 fitting is to terminate M24758-* flexible sheilding conduit directly to a panel. Two jam nuts are supplied with this fitting. One nut secures the fitting to the panel and the second nut acts as a lock nut to the first.
3. Use Glenair 600-176 Jam Nut Wrench.
4. Material / Finish:
   Adapter, nuts, sleeve & ring - 316 SST/Electroless nickel, matte finish.
   O-Ring and gland - Silicone rubber / NA.
   Sealing Washer - See individual drawing.
5. 4. Metric dimensions (mm) are indicated in parentheses.

© 2013 Glenair, Inc.

GLENAIR, INC. • 1211 AIR WAY • GLENDALE, CA 91201-2497 • 818-247-6000 • FAX 818-500-9912
www.glenair.com
E-Mail: sales@glenair.com

MIL-PRF-24758-5
Straight Conduit to Panel Fitting

Glenair®

TABLE I					
CONDUIT SIZE CODE	A CLASS - 2A THREAD	B DIA ±.06 (1.5)	C DIA MIN	E MAX DIA	L REF DIM
A	.625-24 UNEF	1.000 (25.40)	.245 (6.2)	1.18 (29.97)	3.400 (86.36)
B	.875-20 UNEF	1.250 (31.75)	.495 (12.6)	1.45 (36.83)	3.400 (86.36)
C	1.188-18 UNEF	1.562 (39.67)	.745 (18.9)	1.79 (45.47)	3.400 (86.36)
D	1.438-18 UNEF	1.812 (46.02)	.995 (25.3)	2.06 (52.32)	3.400 (86.36)
E	1.750-16 UN	2.125 (53.98)	1.245 (31.6)	2.32 (58.93)	3.400 (86.36)
F	2.000-16 UN	2.375 (60.33)	1.495 (38.0)	2.59 (65.79)	3.680 (93.47)
G	2.500-16 UN	2.875 (73.03)	1.995 (50.7)	3.26 (82.80)	3.680 (93.47)
H	3.000-16 UN	3.375 (85.73)	2.495 (63.4)	3.80 (96.52)	3.680 (93.47)
J	.750-20 UNEF	1.125 (28.58)	.370 (9.4)	1.32 (33.53)	3.400 (86.36)
K	1.000-20 UNEF	1.500 (38.10)	.620 (15.7)	1.66 (42.16)	3.400 (86.36)
L	3.500-16 UN	3.750 (95.3)	2.995 (76.1)	4.34 (110.24)	3.680 (93.47)

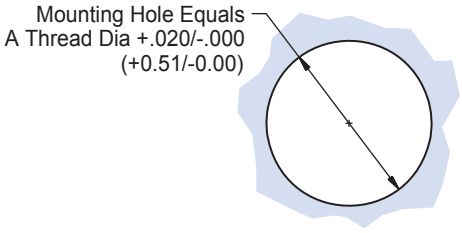

Panel Cut-Out

TABLE II RECOMMENDED TORQUE (Inch Lbs.)		
CONDUIT SIZE CODE	SLEEVE	JAM NUT See Note 3
A	115 – 125	40 – 50
B	135 – 145	50 – 60
C	145 – 155	
D	165 – 175	80 – 90
E	165 – 175	
F	165 – 175	100 – 110
G	165 – 175	150 – 160
H	165 – 175	
J	115 – 125	50 – 60
K	135 – 145	
L	165 – 175	150 – 160

© 2013 Glenair, Inc.

MIL-PRF-24758-6
Straight Conduit to Tapered Pipe Thread Fitting

Basic Number	Conduit Size Code *(Table I)*	Dash Number *(Table II)*
M24758-6	C	04

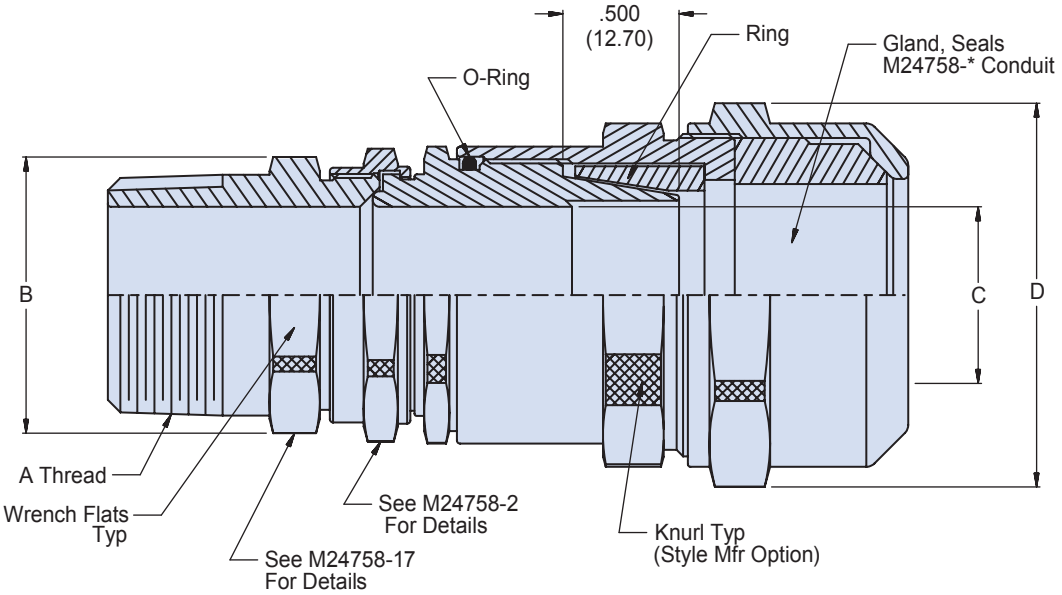

APPLICATION NOTES

1. Assembly identified with manufacurer's code identification number (Glenair, part number and classification code 490).
2. The function of the M24758-6 fitting is to terminate M24758-* flexible sheilding conduit to a reusable fitting having an external tapered pipe thread.
3. See M24758-2 for recommended torque values.
4. Material / Finish:
   Adapter, nuts, sleeve & ring - 316L SST/Electroless nickel, matte finish.
   O-Ring and gland - Silicone rubber / NA.
5. Metric dimensions (mm) are indicated in parentheses.

© 2013 Glenair, Inc.

GLENAIR, INC. • 1211 AIR WAY • GLENDALE, CA 91201-2497 • 818-247-6000 • FAX 818-500-9912
www.glenair.com
E-Mail: sales@glenair.com

TABLE I		
CONDUIT SIZE CODE	C DIA MIN	D DIA MAX
A	.245 (6.2)	1.18 (29.97)
B	.495 (12.6)	1.45 (36.83)
C	.745 (18.9)	1.79 (45.47)
D	.995 (25.3)	2.06 (52.32)
E	1.245 (31.6)	2.32 (58.93)
F	1.495 (38.0)	2.59 (65.79)
G	1.995 (50.7)	3.26 (82.80)
H	2.495 (63.4)	3.80 (96.52)
J	.370 (9.4)	1.32 (33.53)
K	.620 (15.7)	1.66 (42.16)
L	2.995 (76.1)	4.34 (110.24)

TABLE II		
DASH NUMBER	A EXTERNAL TAPER PIPE THREAD	B DIA MAX
1	.250-18 NPT	1.000 (25.40)
2	.375-18 NPT	1.130 (28.70)
3	.500-14 NPT	1.250 (31.75)
4	.750-14 NPT	1.500 (38.10)
5	1.000-11.5 NPT	1.750 (44.45)
6	1.250-11.5 NPT	2.130 (54.10)
7	1.500-11.5 NPT	2.380 (60.45)
8	2.000-11.5 NPT	2.880 (73.15)
9	2.500-8 NPT	3.380 (85.85)
10	3.000-8 NPT	4.130 (104.90)

TABLE III RECOMMENDED TORQUE (See Note 3)		
CONDUIT SIZE CODE	± 5 Inch lbs.	
	A THREAD	SLEEVE
A	40	120
B	45	140
C	50	150
D	80	170
E	80	170
F	80	170
G	80	170
H	80	170
J	45	120
K	50	140
L	80	170

© 2013 Glenair, Inc.

GLENAIR, INC. • 1211 AIR WAY • GLENDALE, CA 91201-2497 • 818-247-6000 • FAX 818-500-9912
www.glenair.com
E-Mail: sales@glenair.com

MIL-PRF-24758-7
Straight Conduit to Stuffing Tube

Basic Number	Stuffing Tube Size *(Table II)*	Conduit Size Code *(Table I)*
M24758-7	C	C

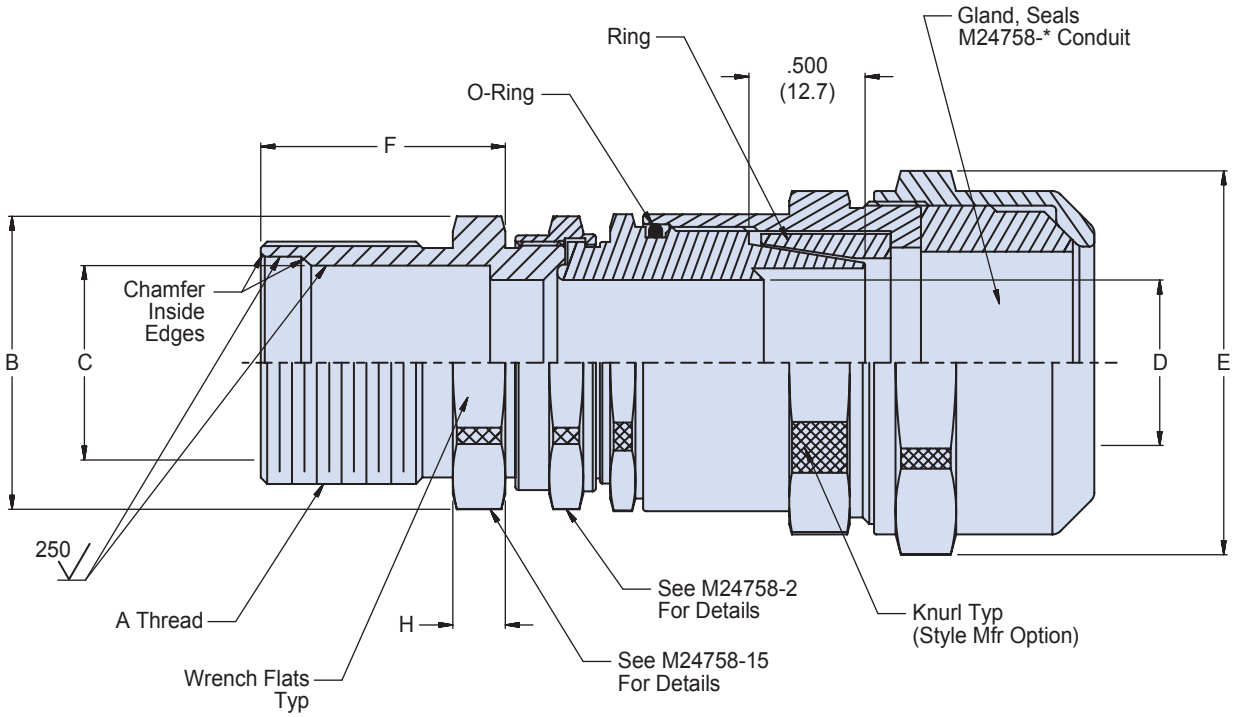

APPLICATION NOTES

1. Assembly identified with manufacurer's code identification number (Glenair, part number and classification code 490).
2. The M24758-7 adapter couples MIL-S-24235/9 through MIL-S-24235/17 stuffing tubes to M24758-* conduit.
3. See M25758-2 for recommended torque values.
4. Material / Finish:
   Adapter, nuts, sleeve & ring - 316L SST/Electroless nickel, matte finish.
   O-Ring and gland - Silicone rubber / NA.
5. Metric dimensions (mm) are indicated in parentheses.

© 2013 Glenair, Inc.

MIL-PRF-24758-7
Straight Conduit to Stuffing Tube

Glenair®

TABLE II						
STUFFING TUBE SIZE	CONDUIT SIZE CODE	A CLASS - 2A THREAD	B DIA MAX	C DIA	F ± .020 (0.51)	H ± .020 (0.51)
A	A, B, J	.875-12UN	1.375 (34.93)	.406 (10.31)	1.063 (27.00)	.188 (4.78)
B	B	1.000-12UN	1.500 (38.10)	.515 (13.08)	1.063 (27.00)	.188 (4.78)
C	B, C, K	1.250-12UN	1.625 (41.28)	.640 (16.26)	1.063 (27.00)	.188 (4.78)
D	C, K	1.250-12UN	1.750 (44.45)	.750 (19.05)	1.063 (27.00)	.188 (4.78)
E	D	1.313-12UN	2.750 (69.85)	.812 (20.62)	1.063 (27.00)	.188 (4.78)
F	D	1.625-12UN	2.812 (71.42)	.843 (21.41)	1.188 (30.18)	.188 (4.78)
G	E	1.750-12UN	2.000 (50.80)	.935 (23.75)	1.188 (30.18)	.188 (4.78)
J	E	1.813-12UN	2.125 (53.98)	1.062 (26.97)	1.188 (30.18)	.188 (4.78)
K	E	2.000-12UN	2.250 (57.15)	1.171 (29.74)	1.500 (38.10)	.188 (4.78)
L	E, F	2.063-12UN	2.312 (58.72)	1.265 (32.13)	1.500 (38.10)	.188 (4.78)
M	F	2.188-12UN	2.500 (63.50)	1.406 (35.71)	1.500 (38.10)	.250 (6.35)
N	G	2.313-12UN	2.625 (66.66)	1.515 (38.48)	1.563 (39.70)	.250 (6.35)
P	G	2.688-12UN	2.750 (69.85)	1.625 (41.28)	1.563 (39.70)	.250 (6.35)
R	G	2.875-12UN	2.875 (73.03)	1.750 (44.45)	1.563 (39.70)	.250 (6.35)
S	G	3.000-12UN	3.250 (82.55)	1.875 (47.63)	2.188 (55.58)	.313 (7.95)
T	G	2.875-12UN	3.500 (88.90)	2.062 (52.37)	2.188 (55.58)	.313 (7.95)
V	G, H	3.000-12UN	3.625 (92.08)	2.187 (55.55)	2.188 (55.58)	.313 (7.95)
W	H	3.125-12UN	3.750 (95.25)	2.312 (58.72)	2.188 (55.58)	.313 (7.95)
X	H	3.250-12UN	3.875 (98.43)	2.500 (63.50)	2.188 (55.58)	.313 (7.95)
Y	H	3.375-12UN	4.000 (101.60)	2.609 (66.27)	2.188 (55.58)	.313 (7.95)
Z	H	3.563-12UN	4.250 (107.95)	2.781 (70.64)	2.188 (55.58)	.313 (7.95)
AA	H	3.750-12UN	4.500 (114.30)	2.875 (73.03)	3.125 (79.38)	.438 (11.13)
BB	H, L	4.000-12UN	4.750 (120.65)	3.157 (80.19)	3.125 (79.38)	.438 (11.13)

TABLE I		
CONDUIT SIZE CODE	D MIN DIA	E MAX DIA
A	.245 (6.22)	1.18 (29.97)
B	.495 (12.57)	1.45 (36.83)
C	.745 (18.63)	1.79 (45.47)
D	.995 (25.73)	2.06 (52.32)
E	1.245 (31.63)	2.32 (58.93)
F	1.495 (37.97)	2.59 (65.79)
G	1.995 (50.63)	3.26 (82.80)
H	2.495 (63.37)	3.80 (96.52)
J	.370 (9.40)	1.32 (33.53)
K	.620 (15.75)	1.66 (42.16)
L	2.995 (76.03)	4.34 (110.24)

TABLE III RECOMMENDED TORQUE (See Note 3)		
CONDUIT SIZE CODE	± 5 Inch lbs.	
	A THREAD	SLEEVE
A	40	120
B	45	140
C	50	150
D	80	170
E	80	170
F	80	170
G	80	170
H	80	170
J	45	120
K	50	140
L	80	170

© 2013 Glenair, Inc.

GLENAIR, INC. • 1211 AIR WAY • GLENDALE, CA 91201-2497 • 818-247-6000 • FAX 818-500-9912
www.glenair.com E-Mail: sales@glenair.com

MIL-PRF-24758-8
Straight Conduit-to-Conduit Fitting

Basic Number	Conduit Size Code *(Table I)*
M24758-8	C

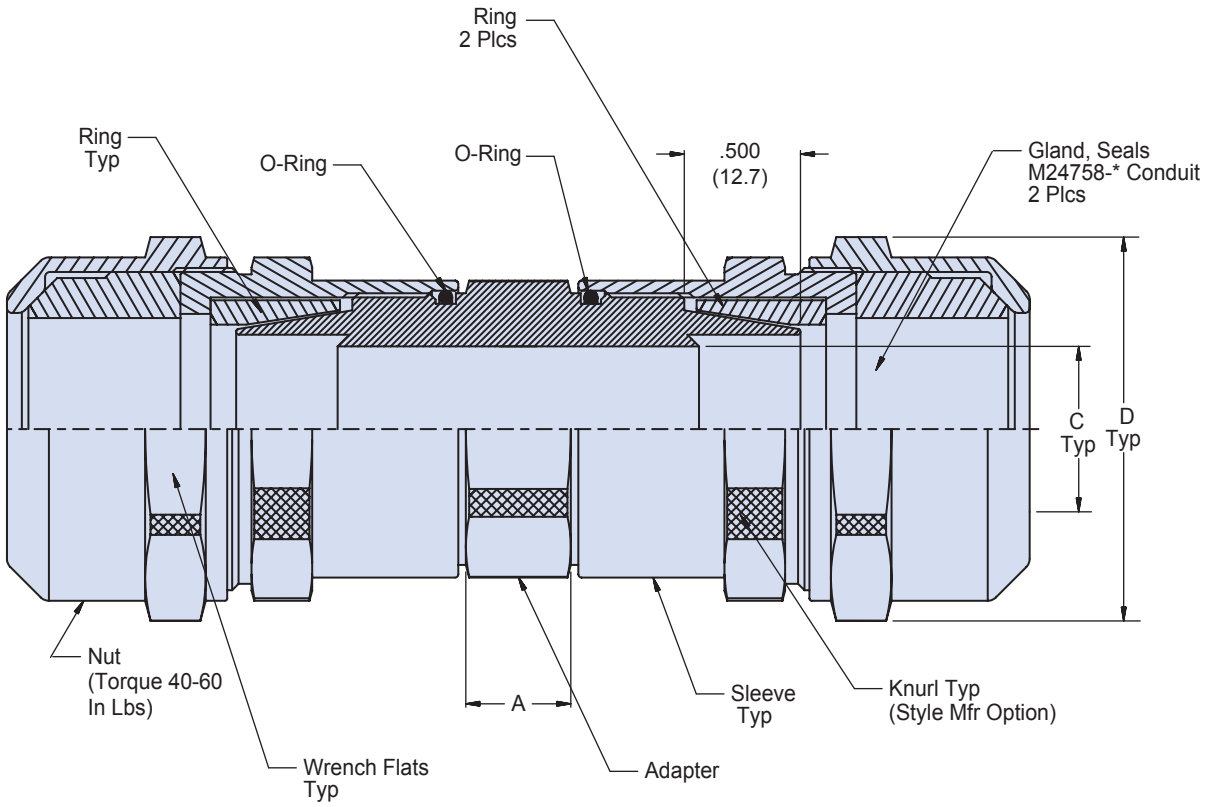

APPLICATION NOTES

1. Assembly identified with manufacurer's code identification number (Glenair, part number and classification code 490).
2. The function of the M24758/8 conduit-to-conduit fitting is to connect two sections of M24758-* flexible shielding conduit. Consult factory to mate two different sizes of conduit or to purchase the union fitting separately.
3. See M25758-2 for recommended torque values.
4. Material / Finish:
   Adapter, nuts, sleeve & ring - 316L SST/Electroless nickel, matte finish.
   O-Ring and gland - Silicone rubber / NA.
5. Metric dimensions (mm) are indicated in parentheses.

© 2013 Glenair, Inc.

GLENAIR, INC. • 1211 AIR WAY • GLENDALE, CA 91201-2497 • 818-247-6000 • FAX 818-500-9912
www.glenair.com
E-Mail: sales@glenair.com

TABLE I			
CONDUIT SIZE CODE	A ± .060 (1.52) DIM	C MIN DIA	D MAX DIA
A	.500 (12.70)	.245 (6.22)	1.18 (29.97)
B	.560 (14.22)	.495 (12.57)	1.45 (36.83)
C	.620 (15.75)	.745 (18.63)	1.79 (45.47)
D	.620 (15.75)	.995 (25.73)	2.06 (52.32)
E	.680 (17.27)	1.245 (31.63)	2.32 (58.93)
F	.680 (17.27)	1.495 (37.97)	2.59 (65.79)
G	.750 (19.05)	1.995 (50.63)	3.26 (82.80)
H	.750 (19.05)	2.495 (63.37)	3.80 (96.52)
J	.500 (12.70)	.370 (9.40)	1.32 (33.53)
K	.560 (14.22)	.620 (15.75)	1.66 (42.16)
L	.750 (19.05)	2.995 (76.03)	4.34 (110.24)

TABLE III RECOMMENDED TORQUE (See Note 3)		
CONDUIT SIZE CODE	± 5 Inch lbs.	
	A THREAD	SLEEVE
A	40	120
B	45	140
C	50	150
D	80	170
E	80	170
F	80	170
G	80	170
H	80	170
J	45	120
K	50	140
L	80	170

© 2013 Glenair, Inc.

MIL-PRF-24758-9
Adapter for MS3100 Series MIL-DTL-5015 Connectors

Basic Number	Conduit Size Code *(Table I)*	A Thread Code *(Table III)*
M24758-9	C	11

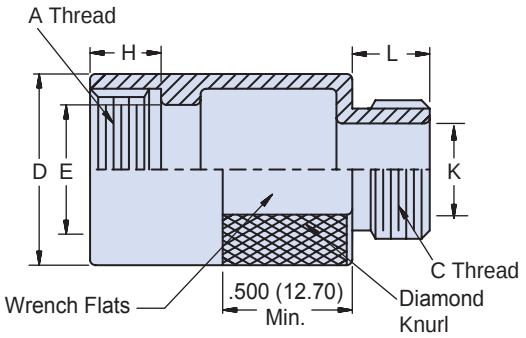

For Use When E Diameter is Greater Than K Diameter

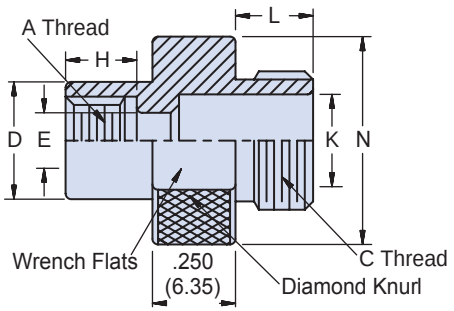

For Use When E Diameter is Equal to or Less Than K Diameter

TABLE I

CONDUIT SIZE CODE	C CLASS - 2A THREAD	L +.030 (0.76) -.00 (0.00)	K DIA MIN	N DIA ± .020 (0.51)
A	.438-28 UNEF	.210 (5.33)	.245 (6.22)	.687 (17.45)
B	.688-24 UNEF	.250 (6.35)	.490 (12.57)	.937 (23.80)
C	.938-20 UNEF	.310 (7.87)	.745 (18.92)	1.187 (30.15)
D	1.250-18 UNEF	.370 (9.40)	.995 (25.27)	1.500 (38.10)
E	1.563-18 UNEF	.370 (9.40)	1.245 (31.62)	1.812 (46.02)
F	1.875-16 UN	.430 (10.92)	1.495 (37.97)	2.125 (53.98)
G	2.375-16 UN	.430 (10.92)	1.995 (50.67)	2.625 (66.68)
H	2.875-16 UN	.430 (10.92)	2.495 (63.37)	3.125 (79.8)
J	.563-24 UNEF	.250 (6.35)	.370 (9.40)	.812 (20.62)
K	.813-20 UNEF	.310 (7.87)	.620 (15.75)	1.062 (26.97)
L	3.375-16 UN	.430 (10.92)	2.995 (76.07)	3.625 (92.08)

APPLICATION NOTES

1. Assembly identified with manufacurer's code identification number (Glenair, part number and classification code 490).
2. The function of the M24758-9 couples MIL-C-5015 connectors (MS3100, MS3101, MS3106 and MS-series end bells) to M24758-2, MS24758-3 or M24758-4 fittings.
3. For MIL-DTL-5015, MS3400 series, the M24758-13 adapter shall be used.
4. See Glenair Circular Connector Accessories Catalog for recommended torque values, Group 1.
5. Material / Finish:
   Adapter - 316 / electroless nickel, matte finish
6. Metric dimensions (mm) are indicated in parentheses.

© 2013 Glenair, Inc.

GLENAIR, INC. • 1211 AIR WAY • GLENDALE, CA 91201-2497 • 818-247-6000 • FAX 818-500-9912
www.glenair.com
E-Mail: sales@glenair.com

MIL-PRF-24758-9
Adapter for MS3100 Series MIL-DTL-5015 Connectors

MIL-DTL-5015 CONNECTOR MANUFACTURER SYMBOLS

Symbol	Manufacturer	Connector Series	Class
A	All	MS3100, 01, 06	A/E/F/R
H	Amphenol	MS3100, 01, 06; 97 Series, Blue Insert	A
J		MS3100, 01, 06	E/F/R
L	Amphenol/BCO	MS3100, 01, 06; 10-214, 10-720, 10-721, 10-726	A/E/F/R
M	Cannon	MS3100, 01, 06	A
N	Cannon	MS3100, 01, 063; CA 00, 01, 06	E/F/R

A-THREAD CODE AND ADAPTER DIMENSIONS

A Thread Code	Connector Shell Size	Connector Code	A Class – 2B Thread	H ± .02		D Dia ± .02		E Dia ± .02	
				In.	mm.	In.	mm.	In.	mm.
1	8S	D	.375-32 UNEF	0.180	4.6	0.500	12.7	0.280	7.1
2	8S	B	.438-27 UNS	0.210	5.3	0.560	14.2	0.340	8.6
3	8	C,E,F	.438-28 UNEF	0.210	5.3	0.560	14.2	0.340	8.6
4	8S	A	.500-28 UNEF	0.210	5.3	0.620	15.7	0.370	9.4
4	10S	A,B,C,D,E	.500-28 UNEF	0.210	5.3	0.620	15.7	0.370	9.4
5	10S	E	.563-24 UNEF	0.250	6.4	0.680	17.3	0.450	11.4
5	10SL	E,F	.563-24 UNEF	0.250	6.4	0.680	17.3	0.450	11.4
6	10SL	A,B,C,D	.625-24 UNEF	0.250	6.4	0.750	19.1	0.500	12.7
6	12,12S	A,D,F	.625-24 UNEF	0.250	6.4	0.750	19.1	0.500	12.7
7	12,12S	B,C,E	.688-24 UNEF	0.250	6.4	0.810	20.6	0.570	14.5
8	12SL	A	.750-20 UNEF	0.280	7.1	0.870	22.1	0.620	15.7
8	14,14S	A,B,C,D,E,F	.750-20 UNEF	0.280	7.1	0.870	22.1	0.620	15.7
9	16,16S	A,B,C,D,E,F	.875-20 UNEF	0.280	7.1	1.000	25.4	0.750	19.1
10	18	A,B,C,D,E,F	1.000-20 UNEF	0.280	7.1	1.120	28.4	0.870	22.1
11	20	B,D,E,F	1.125-18 UNEF	0.280	7.1	1.250	31.8	1.000	25.4
12	20	C	1.125-24 UNS	0.280	7.1	1.250	31.8	1.000	25.4
13	20,22	A	1.188-18 UNEF	0.280	7.1	1.310	33.3	1.060	26.9
14	22	B,C,D,E,F	1.250-18 UNEF	0.280	7.1	1.370	34.8	1.120	28.4
15	24	B,C,D,E,F	1.375-18 UNEF	0.280	7.1	1.500	38.1	1.250	31.8
16	24,28	A	1.438-18 UNEF	0.280	7.1	1.560	39.6	1.310	33.3
17	28	B,C,D,E,F	1.625-18 UNEF	0.280	7.1	1.750	44.5	1.500	38.1
18	32	A	1.750-18 UNS	0.280	7.1	1.870	47.5	1.620	41.1
19	32	D,E,F	1.875-16 UN	0.280	7.1	2.000	50.8	1.750	44.5
20	32	B,C	1.906-18	0.280	7.1	2.030	51.6	1.780	45.2
21	36	A	2.000-18 UNS	0.280	7.1	2.120	53.8	1.870	47.5
22	36	D	2.063-16 UNS	0.310	7.9	2.180	55.4	1.930	49.0
23	36	C	2.063-20	0.280	7.1	2.180	55.4	1.930	49.0
24	36	E,F	2.125-16 UN	0.310	7.9	2.250	57.2	2.000	50.8
25	36	B	2.125-18	0.280	7.1	2.250	57.2	2.000	50.8
26	40	A	2.250-16 UN	0.310	7.9	2.370	60.2	2.120	53.8
27	40	D	2.313-16 UNS	0.310	7.9	2.430	61.7	2.180	55.4
28	40	B,E,F	2.375-16 UN	0.310	7.9	2.500	63.5	2.250	57.2
29	44	B,F	2.625-16 UN	0.310	7.9	2.750	69.9	2.500	63.5
30	48	F	2.813-18	0.280	7.1	2.930	74.4	2.680	68.1
31	48	B	2.875-16 UN	0.310	7.9	3.000	76.2	2.750	69.9

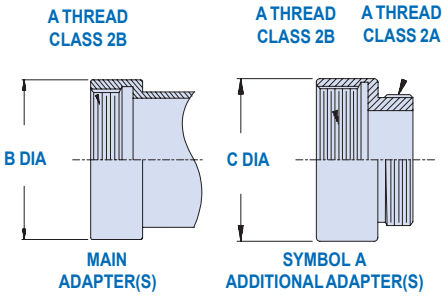

1. If the specific manufacturer is not known, order symbol A and corresponding dash number, for MS universal fit.
2. Symbol A mates with all connectors for each shell size.
3. Additional transition adapters may be supplied with symbol A for each shell size, as noted.

© 2013 Glenair, Inc. CAGE Code 06324 Rev. 12.5.14 Printed in U.S.A.

MIL-PRF-24758-10
Adapter for Triaxial Connectors

Basic Number	Conduit Size Code *(Table I)*	A Thread Code *(Table II)*
M24758-10	C	01

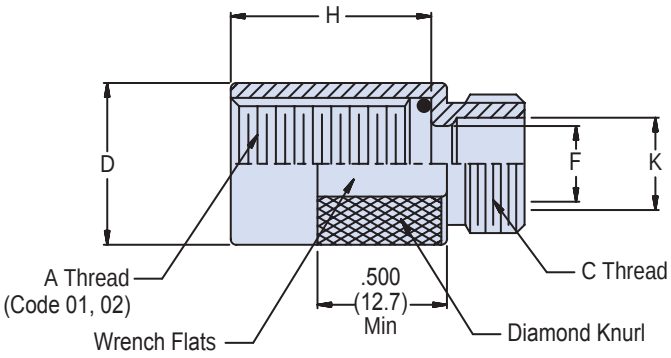

Adapter with
Internal Class 2B Thread
(Code 01 and 02)

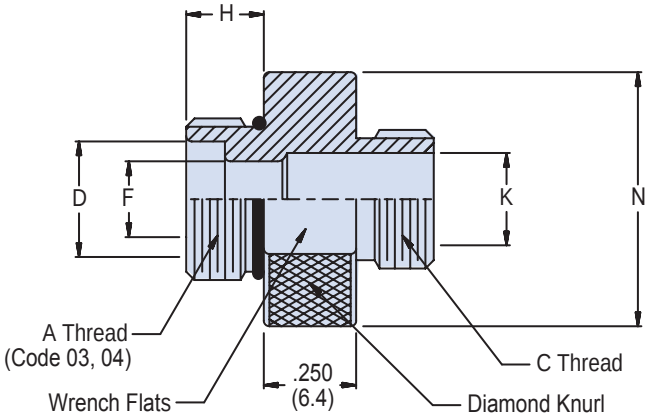

Adapter with
Internal Class 2B Thread
(Code 03 and 04)

APPLICATION NOTES

1. Assembly identified with manufacurer's code identification number (Glenair, part number and classification code 490).
2. The M24758-10 adapter couples triaxial connectors to M24758-2, M24758-3 or M24758-4 fittings.
3. See Table III for recommended torque values.
4. Material / Finish:
   Adapter - 316 SST/electroless nickel, matte finish.
   O-Ring - silicone rubber / NA.
5. Metric dimensions (mm) are indicated in parentheses.

© 2013 Glenair, Inc.

TABLE I			
Conduit Size Code	C Class - 2A Thread	K Dia Min	N Dia ±.02 (0.5)
A	.438-28 UNEF	.245 (6.2)	.687 (17.4)
B	.688-24 UNEF	.495 (12.6)	.937 (23.8)
C	.938-20 UNEF	.745 (18.9)	1.187 (30.1)
D	1.250-18 UNEF	.995 (25.3)	1.500 (38.1)
J	.563-24 UNEF	.370 (9.4)	.812 (20.6)
K	.813-20 UNEF	.620 (15.7)	1.062 (27.0)

TABLE II: A-THREAD CODE AND ADAPTER DIMENSIONS								
A Thread Code	Connector Part Number		A Thread	D Dia Min	F Dia Min	H ±.02 (0.5)	Cable (Reference)	
	ITT/Cannon	Formerly Gremar					Type	OD
01	152105-2380	5633	.750-16 UNF-2B	.875 (22.2)	.297 (7.5)	.562 (14.3)	RG-22/U RG-258C/U	.216 (5.5) .195 (5.0)
02	152100-2390	7991	.875-20 UNEF-2B	1.000 (25.4)	.515 (13.1)	.500 (12.7)	RG-214/U RG-98/U	.425 (10.8) .420 (10.7)
03	152190-0000	16312	1.063-18 UNEF-2A	.922 (23.4)	.564 (14.3)	.212 (7.9)	RG-14A/U RG-293A/U *TRF-8 RG-14A/U	.545 (13.8) .545 (13.8) .500 (12.7) .545 (13.8)
04		11865	1.063-18 UNEF-2A	.922 (23.4)	.564 (14.3)	.335 (8.5)	RG-293A/U *TRF-8	.545 (13.8) .500 (12.7)

TABLE III: RECOMMENDED TORQUE						
Conduit Size Code	A	B	C	D	J	K
C Thread ± 5 Inch lbs.	40	40	40	40	80	120

© 2013 Glenair, Inc.

GLENAIR, INC. • 1211 AIR WAY • GLENDALE, CA 91201-2497 • 818-247-6000 • FAX 818-500-9912
www.glenair.com
E-Mail: sales@glenair.com

MIL-PRF-24758-11
Adapter for Coaxial Connectors

Basic Number	Conduit Size Code *(Table I)*	A Thread Code *(Table II; See Note 3)*
M24758-11	C	02

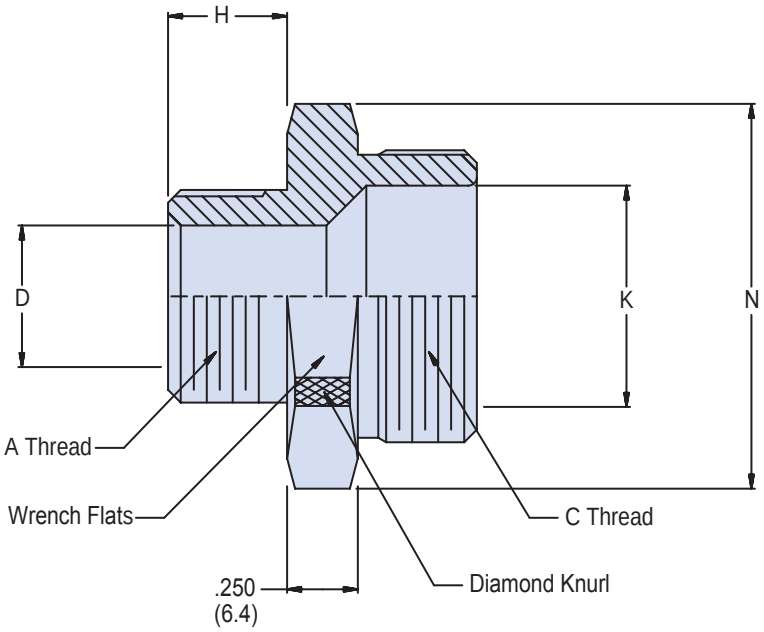

APPLICATION NOTES

1. Assembly identified with manufacurer's code identification number (Glenair, part number and classification code 490).
2. The M24758-11 adapter couples coaxil connectors to M24758-2, M24758-3, M24758-4 series fittings.
3. Select an A-thread from table II which matches that of the back of the nut on the connector being used. If none of the A-threads match, substitute the desired A-thread information in lieu of the A-thread code in the part number. For example: A fitting for a 0.500" conduit with a 0.5-28 A-thread of 0.313' H-length would have the part number: M24758-11B0.5-28-0.313.
5. Material / Finish:
   Adapter - 316 / electroless nickel, matte finish
6. Metric dimensions (mm) are indicated in parentheses.
7. See M24758-2, -3, -4 torque values for C thread.

© 2013 Glenair, Inc.

GLENAIR, INC. • 1211 AIR WAY • GLENDALE, CA 91201-2497 • 818-247-6000 • FAX 818-500-9912
www.glenair.com E-Mail: sales@glenair.com

TABLE I			
CONDUIT SIZE CODE	C CLASS - 2A THREAD	K DIA MIN	N DIA ± .02 (0.5)
A	.438-28 UNEF	.245 (6.22)	.687 (17.4)
B	.688-24 UNEF	.495 (12.57)	.937 (23.8)
C	.938-20 UNEF	.745 (18.92)	1.187 (30.1)
D	1.250-18 UNEF	.995 (25.27)	1.500 (38.1)
E	1.563-18 UNEF	1.245 (31.62)	1.812 (46.0)
J	.563-24 UNEF	.370 (9.40)	.812 (20.6)
K	.813-20 UNEF	.620 (15.75)	1.062 (27.0)

TABLE II: A-THREAD CODE AND ADAPTER DIMENSIONS					
A THREAD CODE	A THREAD Class 2A	H ± .03 (.76)	D DIA ±.02 (.51)	CABLE (REFRENCE)	
				TYPE	OD
02	.375-32 UNEF	.210 (5.33)	.226 (5.74)	RG-58, RG-233	.195 (4.95) .216 (54.86)
04	.438-28 UNEF	.250 (6.35)	.345 (8.76)	RG-5, RG-21	.332 (8.43)
06	.625-24 UNEF	.310 (7.87)	.433 (10.83)	RG-9, RG-214	.420 (10.67) .425 (10.80)
08	.688-24 UNEF	.310 (7.87)	.568 (14.43)	RG-14, RG-293	.545 (13.84)
10	.938-20 UNEF	.310 (7.87)	.650 (16.51)	RG-57, RG-294	.625 (15.88) .630 (16.00)
12	.813-20 UNEF	.310 (7.87)	.895 (22.73)	RG-17	.870 (22.10)

© 2013 Glenair, Inc.

MIL-PRF-24758-12
Adapter for MIL-C-26482
Solder Type Series I Connectors

Basic Number	Conduit Size Code *(Table I)*	A Thread Code *(Table II)*
M24758-12	C	15

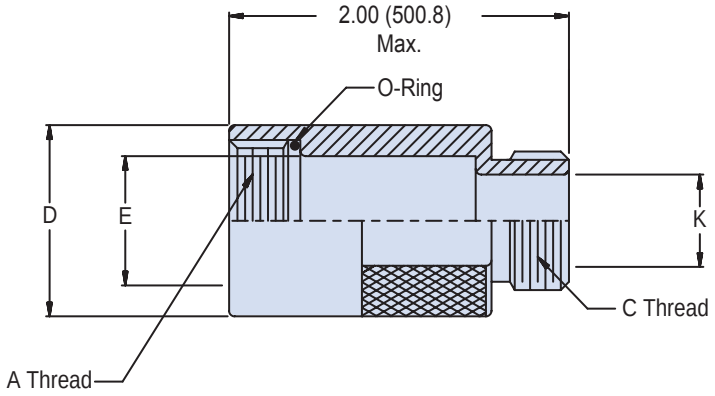

APPLICATION NOTES

1. Assembly identified with manufacurer's code identification number (Glenair, part number and classification code 490).
2. The M24758-12 adapter couples MIL-C-26482 series I connectors (series MS3100, MS3111 or MS3116) to M24758-2, M24758-3 or M24758-4 series fittings.
3. For MIL-DTL-26482 series II, the M24758-13 adapter shall be used.
4. See Glenair Circular Connector Accessories catalog for recommended torque values, Group 1.
5. Material / Finish:
   Adapter - 316 / electroless nickel, matte finish.
6. Metric dimensions (mm) are indicated in parentheses.
7. See M24758-2, -3, -4 torque values for C thread.

© 2013 Glenair, Inc.

TABLE I		
CONDUIT SIZE CODE	C CLASS - 2A THREAD	K DIA MIN
A	.438-28 UNEF	.245 (6.22)
B	.688-24 UNEF	.495 (12.57)
C	.938-20 UNEF	.745 (18.92)
D	1.250-18 UNEF	.995 (25.27)
E	1.563-18 UNEF	1.245 (31.62)
F	1.875-16 UN	1.495 (37.97)
G	2.375-16 UN	1.995 (50.67)
H	2.875-16 UN	2.495 (63.37)
J	.563-24 UNEF	.370 (9.340)
K	.813-20 UNEF	.620 (15.75)
L	3.375-16 UN	2.995 (76.07)

TABLE II: A-THREAD CODE AND ADAPTER DIMENSIONS				
A THREAD CODE	CONN SHELL SIZE	A CLASS - 2B THREAD	D DIA ± .02 (.51)	E DIA ± .02 (.51)
07	8	.438-28 UNEF	.590 (14.99)	.340 (8.64)
09	10	.563-24 UNEF	.710 (18.03)	.450 (11.43)
11	12	.688-24 UNEF	.840 (21.34)	.580 (14.73)
13	14	.813-20 UNEF	.960 (24.38)	.680 (17.27)
15	16	.938-20 UNEF	1.090 (27.69)	.810 (20.57)
17	18	1.063-18 UNEF	1.210 (30.73)	.930 (23.62)
19	20	1.188-18UNEF	1.340 (34.04)	1.060 (26.92)
21	22	1.313-18 UNEF	1.460 (37.08)	1.180 (29.97)
23	24	1.438-18 UNEF	1.590 (40.39)	1.310 (33.27)

© 2013 Glenair, Inc.

MIL-PRF-24758-13
Adapter for MS-3155 Type Connectors

Basic Number	Conduit Size Code *(Table I)*	Connector Dash No. *(Table II)*
M24758-13	C	20

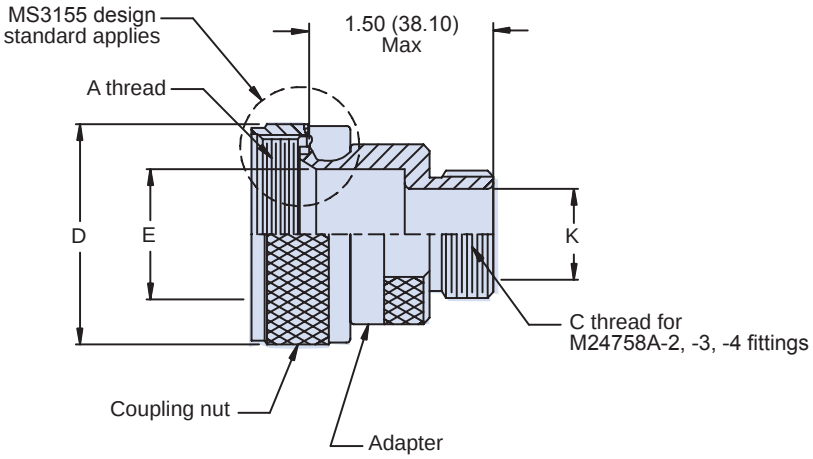

TABLE I

CONDUIT SIZE CODE	C CLASS - 2A THREAD	K DIA MIN
A	.438-28 UNEF	.245 (6.22)
B	.688-24 UNEF	.495 (12.57)
C	.938-20 UNEF	.745 (18.92)
D	1.250-18 UNEF	.995 (25.27)
E	1.563-18 UNEF	1.245 (31.62)
F	1.875-16 UN	1.495 (37.97)
G	2.375-16 UN	1.995 (50.67)
H	2.875-16 UN	2.495 (63.37)
J	.563-24 UNEF	.370 (9.40)
K	.813-20 UNEF	.620 (15.75)
L	3.375-16 UN	2.995 (76.07)

APPLICATION NOTES

1. Assembly identified with manufacurer's code identification number (Glenair, part number and classification code 490).
2. The M24758-13 adapter couples connectors listed in table II to M24758-2, M24758-3 or M24758-4 series conduit fittings.
3. The coupling nut end of this adapter shall conform to military standard MS3155 (Navy), 'Connector, electric, rear accessory design standard." MS3155 takes precedence over this specification.
4. The E diameter and M thread of this drawing are the same as the E diameter and M thread of MS3155, and are included for reference purposes.
5. See Glenair Circular Connector Accessories catalog for recommended torque values, Group 2.
6. Material/Finish:
   Adapter, coupling nut, 316 / electroless nickel, matte finish.
7. Metric dimensions (mm) are indicated in parentheses.

© 2013 Glenair, Inc.

GLENAIR, INC. • 1211 AIR WAY • GLENDALE, CA 91201-2497 • 818-247-6000 • FAX 818-500-9912
www.glenair.com
E-Mail: sales@glenair.com

TABLE II: CONNECTOR DASH NUMBERS AND FITTING DIMENSIONS

CONN DASH NO.	NAS 1599 & MIL-DTL-83723 (SERIES 1 & 3)	MIL-DTL-5015 (MS3400 SERIES)	AS81703 (NAVY) (SERIES 3)	MIL-DTL-26482 (SERIES 2) (MS347X)	A CLASS - 2B THREAD	D DIA MAX	E DIA REF	Y (Style 01) .03 (0.8)
03	--	--	03	--	.562-24 UNEF	.669 (16.99)	.270 (6.86)	.620 (15.7)
08	08	8S	--	08	.500-20 UNF	.617 (15.67)	.270 (6.86)	.620 (15.7)
10	10	10S, 10SL	--	10	.625-24 UNEF	.734 (18.64)	.375 (9.53)	.690 (17.5)
12	12	12, 12S	07	12	.750-20 UNEF	.858 (21.79)	.511 (12.98)	.690 (17.5)
14	14	14, 14S	12	14	.875-20 UNEF	.984 (24.99)	.585 (14.86)	.750 (19.1)
16	16	16, 16S	19	16	1.000-20 UNEF	1.112 (28.24)	.710 (18.03)	.750 (19.1)
18	18	18	27	18	1.062-18 UNEF	1.218 (30.98)	.789 (20.04)	.750 (19.1)
20	20	20	37	20	1.188-18 UNEF	1.345 (34.16)	.914 (23.22)	.810 (20.6)
22	22	22	--	22	1.312-18 UNEF	1.468 (37.29)	1.039 (26.39)	.810 (20.6)
24	24	24	--	24	1.438-18 UNEF	1.593 (40.46)	1.154 (29.31)	.810 (20.6)
28	--	28	--	--	1.750-18 UNS	1.969 (50.01)	1.389 (35.28)	.880 (22.4)
32	--	32	--	--	2.000-18 UNS	2.219 (56.36)	1.635 (41.53)	.880 (22.4)
36	--	36	--	--	2.250-16 UN	2.469 (62.71)	1.850 (46.99)	.880 (22.4)
40	--	40	--	--	2.500-16 UN	2.719 (69.06)	2.065 (52.45)	.940 (23.9)
44	--	44	--	--	2.750-16 UN	2.969 (75.41)	2.320 (58.93)	.940 (23.9)
48	--	48	--	--	3.000-16 UN	3.219 (81.76)	2.570 (65.28)	.940 (23.9)
61	--	--	61	--	1.500-18 UNEF	1.653 (41.99)	1.194 (30.33)	.810 (20.6)

© 2013 Glenair, Inc.

MIL-PRF-24758-14
Adapter for MIL-DTL-28840 Connectors

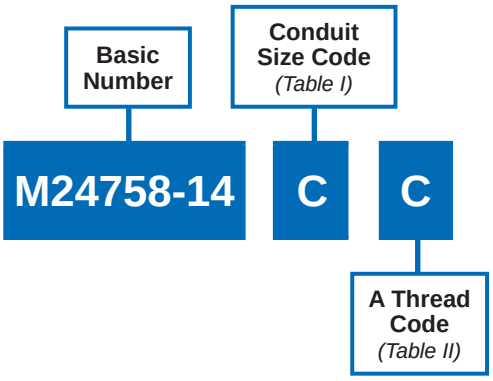

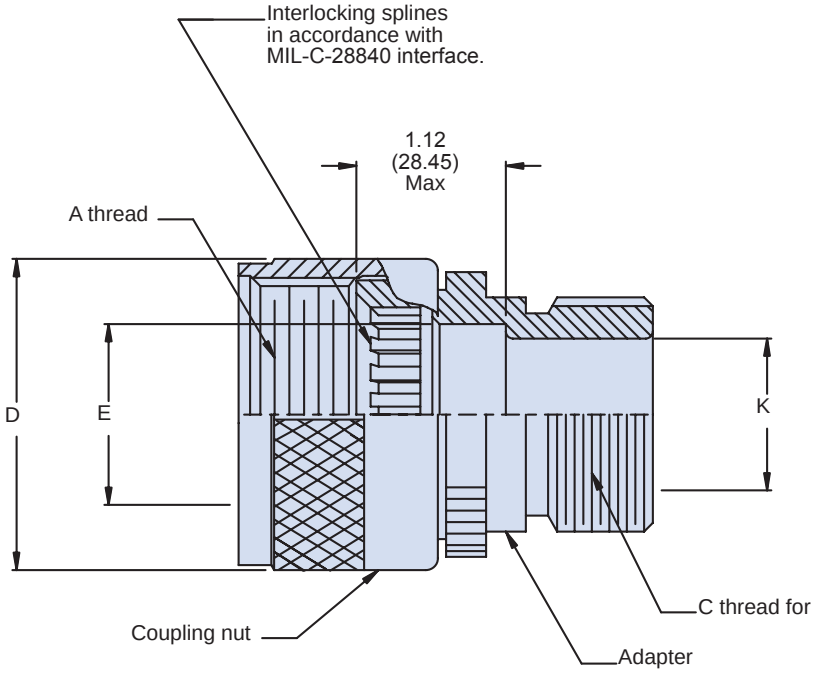

APPLICATION NOTES

1. Assembly identified with manufacurer's code identification number (Glenair, part number and classification code 490).
2. The M24758-14 adapter provides an environmental coupling between MIL-C-28840 (EC) connectors and M24758-2, M24758-3, or M24758-4 series fittings.
3. See Glenair Circular Connector Accessories catalog for recommended torque values, Group 2.
4. Material / Finish:
   Adapter, coupling nut, 316 / electroless nickel, matte finish.
5. Metric dimensions (mm) are indicated in parentheses.

© 2013 Glenair, Inc.

GLENAIR, INC. • 1211 AIR WAY • GLENDALE, CA 91201-2497 • 818-247-6000 • FAX 818-500-9912
www.glenair.com
E-Mail: sales@glenair.com

TABLE I			
CONDUIT SIZE CODE	C CLASS - 2A THREAD	K DIA MIN	N DIA ± .02 (0.5)
A	.438-28 UNEF	.245 (6.22)	.687 (17.4)
B	.688-24 UNEF	.495 (12.57)	.937 (23.8)
C	.938-20 UNEF	.745 (18.92)	1.187 (30.1)
D	1.250-18 UNEF	.995 (25.27)	1.500 (38.1)
E	1.563-18 UNEF	1.245 (31.62)	1.812 (46.0)
F	1.875-16 UN	1.495 (37.97)	2.125 (54.0)
G	2.375-16 UN	1.995 (50.67)	2.625 (66.7)
H	2.875-16 UN	2.495 (63.37)	3.125 (79.4)
J	.563-24 UNEF	.370 (9.40)	.812 (20.6)
K	.813-20 UNEF	.620 (15.75)	1.062 (27.0)
L	3.375-16 UN	2.995 (76.07)	3.625 (92.1)

TABLE II: A-THREAD CODE AND ADAPTER DIMENSIONS				
A THREAD CODE	SHELL SIZE (REF)	A CLASS - 2B THREAD	D DIA MAX	E DIA + .01 (.25) - .00
A	11	.750-20 UNEF	1.028 (26.11)	.357 (9.07)
B	13	.875-20 UNEF	1.141 (28.98)	.492 (12.50)
C	15	1.000-20 UNEF	1.263 (30.08)	.637 (16.18)
D	17	1.125-18 UNEF	1.387 (35.23)	.734 (18.64)
E	19	1.250-18 UNEF	1.513 (38.43)	.866 (22.00)
F	23	1.438-18 UNEF	1.703 (43.26)	1.063 (27.00)
G	25	1.562-18 UNEF	1.825 (46.36)	1.195 (30.35)
H	29	1.875-16 UN	2.143 (54.43)	1.432 (36.37)
J	33	2.062-16 UNS	2.329 (59.16)	1.630 (41.40)

© 2013 Glenair, Inc.

MIL-PRF-24758-15
Adapter for MIL-S-24235 Stuffing Tubes

Basic Number	Stuffing Tube Size Code (Table I)	Conduit Size Code (Table II)
M24758-15	C	C

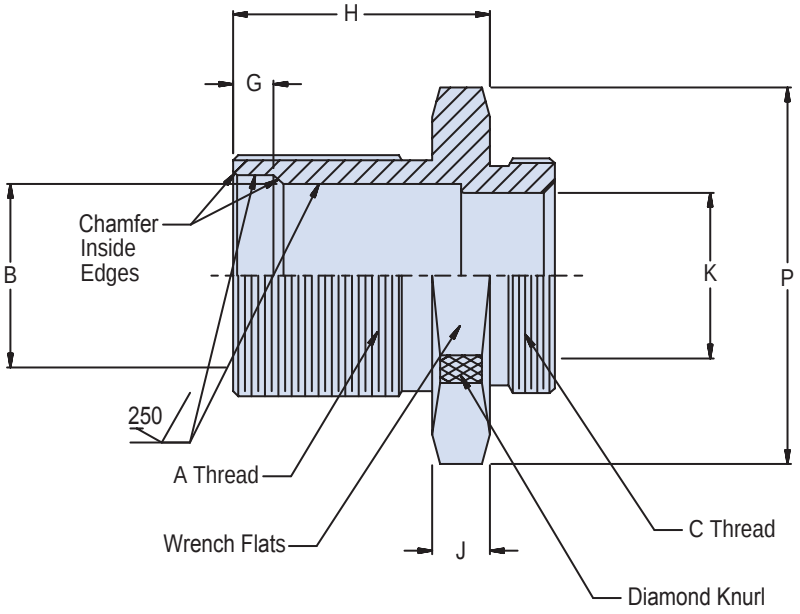

TABLE II

CONDUIT SIZE CODE	C CLASS - 2A THREAD	K DIA MIN
A	.438-28 UNEF	.245 (6.22)
B	.688-24 UNEF	.495 (12.57)
C	.938-20 UNEF	.745 (18.92)
D	1.250-18 UNEF	.995 (25.27)
E	1.563-18 UNEF	1.245 (31.62)
F	1.875-16 UN	1.495 (37.97)
G	2.375-16 UN	1.995 (50.67)
H	2.875-16 UN	2.495 (63.37)
J	.563-24 UNEF	.370 (9.40)
K	.813-20 UNEF	.620 (15.75)
L	3.375-16 UN	2.995 (76.07)

APPLICATION NOTES

1. Assembly identified with manufacurer's code identification number (Glenair, part number and classification code 490).
2. The M24758-15 adapter couples MIL-S-24235/9 through MIL-S-24235/17 stuffing tubes to M24758-2, M24758-3 or M24758-4 series fittings.
3. Material / Finish:
   Adapter - 316 / electroless nickel, matte finish
4. Metric dimensions (mm) are indicated in parentheses.

© 2013 Glenair, Inc.

GLENAIR, INC. • 1211 AIR WAY • GLENDALE, CA 91201-2497 • 818-247-6000 • FAX 818-500-9912
www.glenair.com
E-Mail: sales@glenair.com

TABLE I							
MIL-S-24235 /9, 17 STUFFING TUBE SIZE	CONDUIT SIZE CODE	A CLASS - 2A THREAD	B DIA	G DIM	H DIM ±.02 (.51)	J DIM ±.02 (.51)	P MAX DIA
A	A, B, J	.875-12 UN	.406 (10.31)	.250 (6.4)	1.063 (27.00)	.188 (4.78)	1.375 (34.93)
B	B	1.000-12 UN	.515 (13.08)	.250 (6.4)	1.063 (27.00)	.188 (4.78)	1.500 (38.10)
C	B, C, K	1.125-12 UN	.640 (16.26)	.250 (6.4)	1.063 (27.00)	.188 (4.78)	1.625 (41.28)
D	C, K	1.250-12 UN	.750 (19.05)	.250 (6.4)	1.063 (27.00)	.188 (4.78)	1.750 (44.45)
E	C, D, K	1.250-12 UN	.812 (20.62)	.250 (6.4)	1.063 (27.00)	.188 (4.78)	1.750 (44.45)
F	D	1.313-12 UN	.843 (21.41)	.250 (6.4)	1.188 (30.18)	.188 (4.78)	1.812 (46.02)
G	D	1.500-12 UN	.935 (23.75)	.250 (6.4)	1.188 (30.18)	.188 (4.78)	2.000 (50.80)
J	E	1.625-12 UN	1.062 (26.97)	.250 (6.4)	1.188 (30.18)	.188 (4.78)	2.125 (53.98)
K	E	1.750-12 UN	1.171 (29.74)	.250 (6.4)	1.500 (38.10)	.188 (4.78)	2.250 (57.15)
L	E	1.813-12 UN	1.265 (32.13)	.250 (6.4)	1.500 (38.10)	.188 (4.78)	2.312 (28.72)
M	E, F	2.000-12 UN	1.406 (35.71)	.250 (6.4)	1.500 (38.10)	.188 (4.78)	2.500 (63.50)
N	F	2.063-12 UN	1.515 (38.48)	.250 (6.4)	1.563 (39.70)	.250 (6.35)	2.625 (66.68)
P	G	2.188-12 UN	1.625 (41.28)	.250 (6.4)	1.563 (39.70)	.250 (6.35)	2.750 (69.85)
R	G	2.313-12 UN	1.750 (44.45)	.250 (6.4)	1.563 (39.70)	.250 (6.35)	2.875 (73.03)
S	G	2.688-12 UN	1.875 (47.63)	.375 (9.5)	2.188 (55.58)	.313 (7.95)	3.250 (82.55)
T	G	2.875-12 UN	2.062 (52.37)	.375 (9.5)	2.188 (55.58)	.313 (7.95)	3.500 (88.90)
V	G	3.000-12 UN	2.187 (55.55)	.375 (9.5)	2.188 (55.58)	.313 (7.95)	3.625 (92.08)
W	G, H	3.125-12 UN	2.312 (58.72)	.375 (9.5)	2.188 (55.58)	.313 (7.95)	3.750 (95.25)
X	H	3.250-12 UN	2.500 (63.50)	.375 (9.5)	2.188 (55.58)	.313 (7.95)	3.875 (98.43)
Y	H	3.375-12 UN	2.609 (66.27)	.375 (9.5)	2.188 (55.58)	.313 (7.95)	4.000 (101.60)
Z	H	3.563-12 UN	2.781 (70.64)	.375 (9.5)	2.188 (55.58)	.313 (7.95)	4.250 (107.95)
AA	H	3.750-12 UN	2.875 (73.03)	.375 (9.5)	3.125 (79.38)	.438 (11.13)	4.500 (114.30)
BB	H, L	4.000-12 UN	3.157 (80.19)	.375 (9.5)	3.125 (79.38)	.438 (11.13)	4.750 (120.65)

© 2013 Glenair, Inc.

MIL-PRF-24758-16
Adapter for Miscellaneous Fittings

Basic Number	Conduit Size Code *(Table I)*	A Thread Code *(Table II)*
M24758-16	C	04

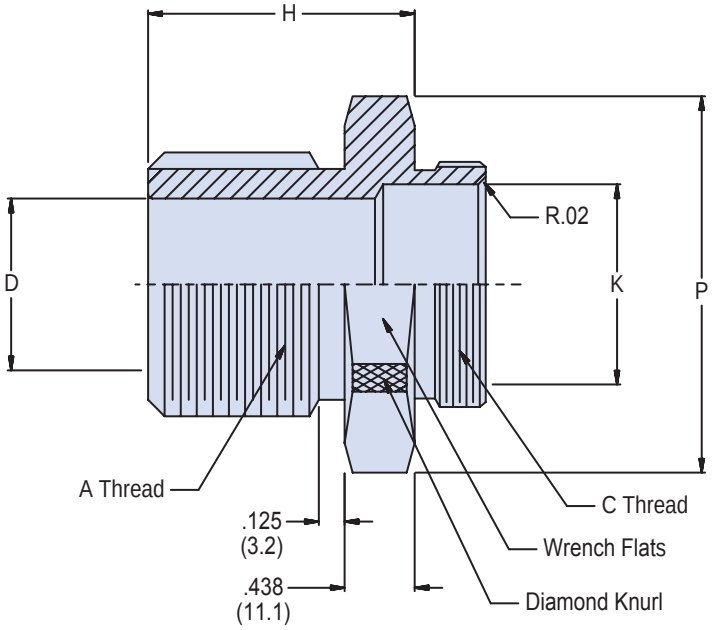

APPLICATION NOTES

1. Assembly identified with manufacurer's code identification number (Glenair, part number and classification code 490).
2. The M24758-16 adapter couples miscellaneous fittings to M24758-2, MS24758-3 or M24758-4 series fittings.
3. The American national thread series (N) has been superseded by the unified thread series (UN) the series N-thread sizes listed in table II are retained for use with those items which have series N-threads.
4. Material / Finish:
   Adapter, - 316 / electroless nickel, matte finish.
5. Metric dimensions (mm) are indicated in parentheses.

© 2013 Glenair, Inc.

GLENAIR, INC. • 1211 AIR WAY • GLENDALE, CA 91201-2497 • 818-247-6000 • FAX 818-500-9912
www.glenair.com
E-Mail: sales@glenair.com

TABLE I		
CONDUIT SIZE CODE	C CLASS - 2A THREAD	K DIA MIN
A	.438-28 UNEF	.245 (6.22)
B	.688-24 UNEF	.495 (12.57)
C	.938-20 UNEF	.745 (18.92)
D	1.250-18 UNEF	.995 (25.27)
E	1.563-18 UNEF	1.245 (31.62)
F	1.875-16 UN	1.495 (37.97)
G	2.375-16 UN	1.995 (50.67)
H	2.875-16 UN	2.495 (63.37)
J	.563-24 UNEF	.370 (9.40)
K	.813-20 UNEF	.620 (15.75)
L	3.375-16 UN	2.995 (76.07)

TABLE II					
A THREAD CODE	A CLASS - 2A THREAD	D DIA ± .005 (.13)	H DIM ± .02 (.51)	P DIM MAX	CONDUIT SIZE
01	1.125-14 N	.500 (12.70)	1.250 (31.75)	1.625 (41.28)	A, B
03	1.280-14 N	.750 (19.05)	1.250 (31.75)	1.750 (44.45)	A-C
04	.750-14 NPSM	.750 (19.05)	1.250 (31.75)	1.500 (38.10)	A-C
06	1.000-11 1/2 NPSM	1.000 (25.40)	1.250 (31.75)	1.750 (44.45)	A-D
07	1.250-11 1/2 NPSM	1.000 (25.40)	1.250 (31.75)	2.000 (50.80)	A-D
09	1.250-11 1/2 NPSM	1.180 (29.97)	1.250 (31.75)	2.000 (50.80)	A-E
10	2.025-11 1/2 N	1.250 (31.75)	1.560 (39.62)	2.875 (73.03)	A-E
13	2.250-11 1/2 N	1.500 (38.10)	1.690 (42.93)	3.250 (82.55)	A-F
16	2.500-8 NPSM	2.000 (50.80)	2.000 (50.80)	3.500 (88.90)	A-G
19	3.000-8 NPSM	2.500 (63.50)	2.060 (25.32)	4.000 (101.60)	A-H
20	1.500-11 1/2 NPSM	1.500 (38.10)	1.250 (31.75)	2.500 (63.50)	A-D
21	2.000-11 1/2 NPSM	2.000 (50.80)	1.250 (31.75)	3.000 (76.20)	A-G

© 2013 Glenair, Inc.

MIL-PRF-24758-17
Adapter for Tapered Pipe Thread

Basic Number	Conduit Size Code *(Table I)*	
M24758-17	C	04

Dash Code *(Table II)*

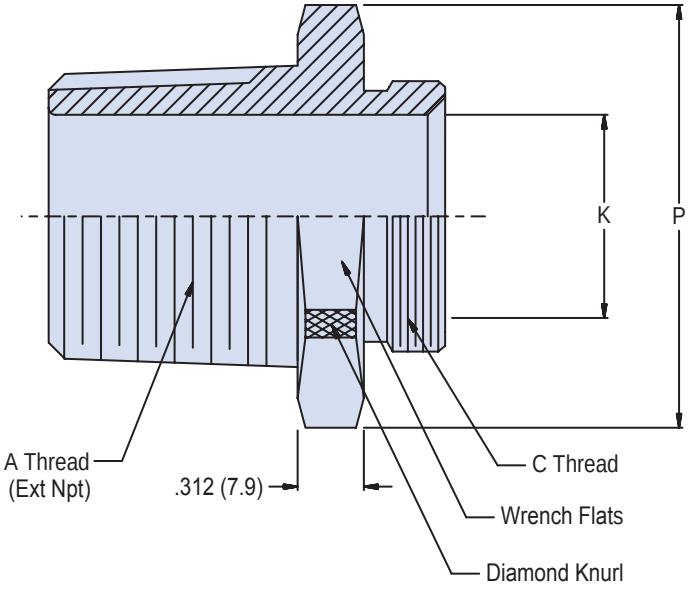

APPLICATION NOTES

1. Assembly identified with manufacurer's code identification number (Glenair, part number and classification code 490).
2. The M24758-17 adapter couples any fittings that have a female tapered pipe thread to M24758-2, M24758-3 or M24758-4 fittings.
3. Material / Finish: Adapter, - 316 / electroless nickel, matte finish.
4. Metric dimensions (mm) are indicated in parentheses.

© 2013 Glenair, Inc.

GLENAIR, INC. • 1211 AIR WAY • GLENDALE, CA 91201-2497 • 818-247-6000 • FAX 818-500-9912
www.glenair.com
E-Mail: sales@glenair.com

TABLE I			
CONDUIT SIZE CODE	C CLASS - 2A THREAD	K DIA MIN	MAX ENTRY DASH NUMBER
A	.438-28 UNEF	.245 (6.22)	01
B	.688-24 UNEF	.495 (12.57)	03
C	.938-20 UNEF	.745 (18.92)	04
D	1.250-18 UNEF	.995 (25.27)	05
E	1.563-18 UNEF	1.245 (31.62)	06
F	1.875-16 UN	1.495 (37.97)	07
G	2.375-16 UN	1.995 (50.67)	08
H	2.875-16 UN	2.495 (63.37)	09
J	.563-24 UNEF	.370 (9.40)	02
K	.813-20 UNEF	.620 (15.75)	04
L	3.375-16 UN	2.995 (76.07)	10

TABLE II		
DASH NUMBER	A EXTERNAL TAPER PIPE THREAD	D DIA MAX
01	.250-18 NPT	1.000 (25.40)
02	.375-18 NPT	1.130 (28.70)
03	.500-14 NPT	1.250 (31.75)
04	.750-14 NPT	1.500 (38.10)
05	1.000-11.5 NPT	1.750 (44.45)
06	1.250-11.5 NPT	2.130 (54.10)
07	1.500-11.5 NPT	2.380 (60.45)
08	2.000-11.5 NPT	2.880 (73.15)
09	2.500-8 NPT	3.380 (85.85)
10	3.000-8 NPT	4.130 (104.90)

© 2013 Glenair, Inc.

MIL-PRF-24758-18
Adapter for Straight Pipe Thread

Basic Number	Conduit Size Code *(Table I)*	
M24758-18	F	06

Dash Code *(Table II)*

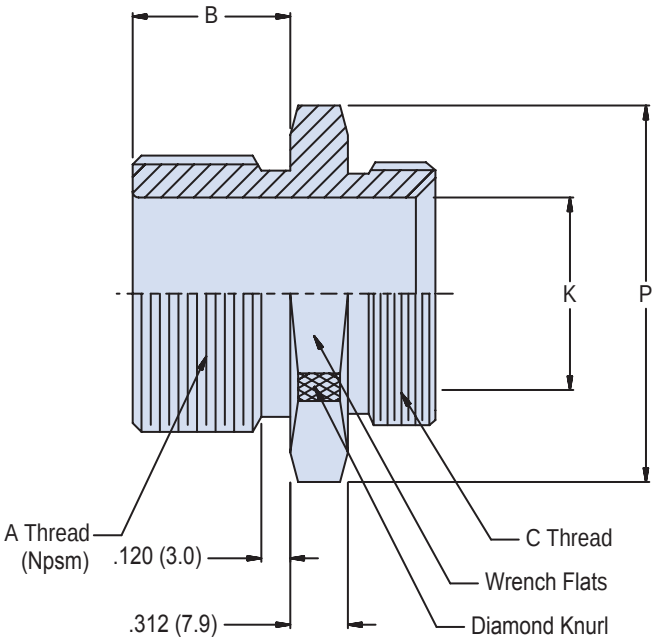

APPLICATION NOTES

1. Assembly identified with manufacurer's code identification number (Glenair, part number and classification code 490).
2. The M24758-18 adapter couples any fittings having a female straight pipe thread to M24758-2, M24758-3 or M24758-4 fittings.
3. Material / Finish:
   Adapter, - 316 / electroless nickel, matte finish.
4. Metric dimensions (mm) are indicated in parentheses.

© 2013 Glenair, Inc.

GLENAIR, INC. • 1211 AIR WAY • GLENDALE, CA 91201-2497 • 818-247-6000 • FAX 818-500-9912
www.glenair.com
E-Mail: sales@glenair.com

TABLE I				
CONDUIT SIZE CODE	C Class 2A Thread	K DIA MIN	P DIA MAX	MAX ENTRY DASH NUMBER
A	.438-28 UNEF	.245 (6.22)	1.000 (25.40)	01
B	.688-24 UNEF	.495 (12.57)	1.250 (31.75)	03
C	.938-20 UNEF	.745 (18.92)	1.500 (38.10)	04
D	1.250-18 UNEF	.995 (25.27)	1.750 (44.45)	05
E	1.563-18 UNEF	1.245 (31.62)	2.130 (54.10)	06
F	1.875-16 UN	1.495 (37.97)	2.380 (60.45)	07
G	2.375-16 UN	1.995 (50.67)	2.880 (73.15)	08
H	2.875-16 UN	2.495 (63.37)	3.380 (85.85)	09
J	.563-24 UNEF	.370 (9.40)	1.130 (28.70)	02
K	.813-20 UNEF	.620 (15.75)	1.630 (41.40)	04
L	3.375-16 UN	2.995 (76.07)	4.130 (104.90)	10

TABLE II		
DASH NUMBER	A EXTERNAL TAPER PIPE THREAD	B DIM ±.02 (0.5)
01	.250-18 NPSM	.750 (19.1)
02	.375-18 NPSM	.750 (19.1)
03	.500-14 NPSM	.870 (22.1)
04	.750-14 NPSM	.870 (22.1)
05	1.000-11.5 NPSM	.870 (22.1)
06	1.250-11.5 NPSM	.870 (22.1)
07	1.500-11.5 NPSM	1.000 (25.4)
08	2.000-11.5 NPSM	1.190 (30.2)
09	2.500-8 NPSM	1.620 (41.1)
10	3.000-8 NPSM	1.690 (42.9)

© 2013 Glenair, Inc.

MIL-PRF-24758-19
Adapter for Panel Termination

Basic Number	Conduit Size Code *(Table I)*
M24758-19	C

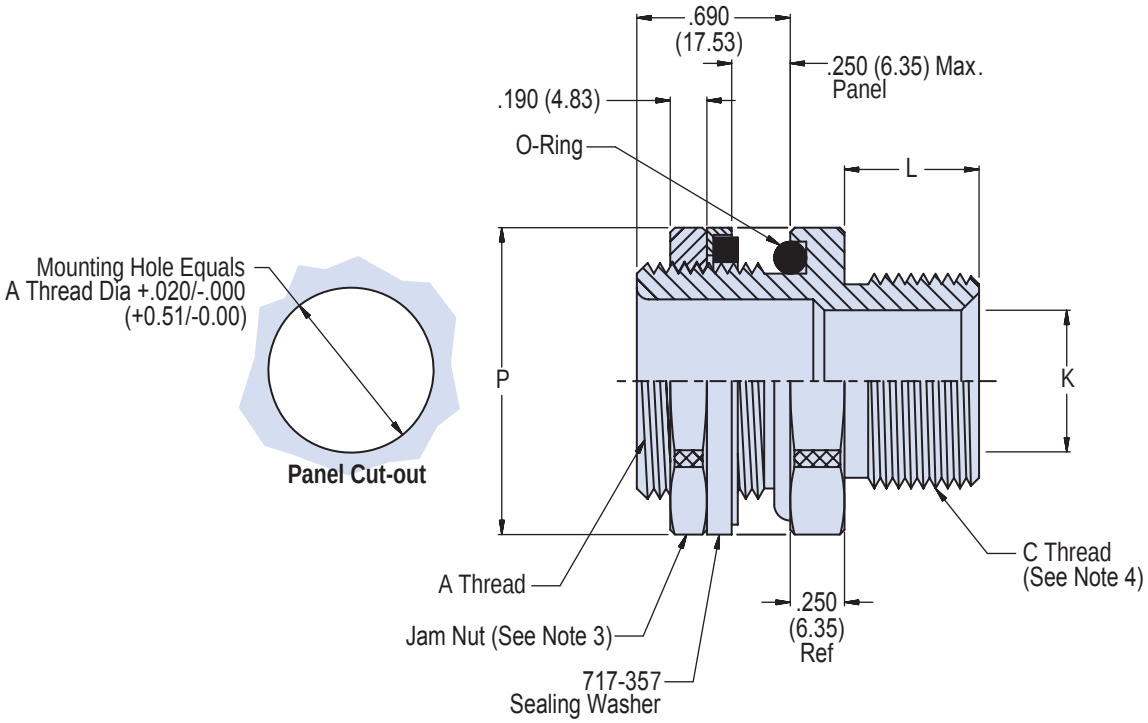

APPLICATION NOTES

1. Assembly identified with manufacurer's code identification number (Glenair, part number and classification code 490).
2. The M24758-19 adapter provides the capability of terminating a M24758-2, M24758-3 or M24758-4 series fitting to a panel.
3. Use Glenair 600-176 jam nut wrench.
4. See M24758-2 for C thread torque values.
5. Metric dimensions (mm) are indicated in parentheses.
6. Material / Finish:
   Adapter, jam nut - 316 electroless nickel, matte finish
   O-Ring - silicone rubber/N.A.
   Sealing washer - See individual drawing.

© 2013 Glenair, Inc.

GLENAIR, INC. • 1211 AIR WAY • GLENDALE, CA 91201-2497 • 818-247-6000 • FAX 818-500-9912
www.glenair.com
E-Mail: sales@glenair.com

TABLE I						
CONDUIT SIZE CODE	A CLASS - 2A THREAD	P DIA	C CLASS - 2A THREAD	L + .030 - .00 +(0.76 -.00)	K DIA MIN	RECOMMENDED TORQUE VALUES INCH LBS (SEE NOTE 3)
A	.625-24 UNEF	.970 (24.6)	.438-28 UNEF	.210 (5.3)	.245 (6.22)	40 - 50
B	.875-20 UNEF	1.240 (31.5)	.688-24 UNEF	.250 (6.4)	.495 (12.6)	50 - 60
BC	1.188-18 UNEF	1.580 (40.1)	.688-24 UNEF	.250 (6.4)	.495 (12.6)	
C	1.188-18 UNEF	1.580 (40.1)	.938-20 UNEF	.310 (7.9)	.745 (19.0)	
CK	1.000-20 UNEF	1.530 (38.9)	.938-20 UNEF	.310 (7.9)	.745 (19.0)	
D	1.438-18 UNEF	1.840 (46.7)	1.250-18 UNEF	.370 (9.4)	.995 (25.3)	80 - 90
E	1.750-16 UN	2.180 (55.4)	1.563-18 UNEF	.370 (9.4)	1.245 (31.6)	
F	2.000-16 UN	2.410 (61.2)	1.875-16 UN	.430 (10.9)	1.495 (38.0)	100 - 110
G	2.500-16 UN	2.980 (75.7)	2.375-16 UN	.430 (10.9)	1.995 (50.7)	150 - 160
H	3.000-16 UN	3.410 (86.6)	2.875-16 UN	.430 (10.9)	2.495 (63.4)	
J	.750-20 UNEF	1.160 (29.5)	.563-24 UNEF	.250 (6.4)	.370 (9.4)	50 - 60
K	1.000-20 UNEF	1.530 (38.9)	.813-20 UNEF	.310 (7.9)	.620 (15.8)	
L	3.500-16 UN	4.060 (103.1)	3.375-16 UN	.430 (10.9)	2.995 (76.1)	150 - 160

NOTE: Panel Cut-Out is +.016 (0.41) -.000 over A Thread Size.

© 2013 Glenair, Inc.

MIL-PRF-24758-20
Adapter for MIL-DTL-38999 Connectors

Basic Number	Conduit Size Code *(Table I)*	Connector Dash Code *(Table II)*
M24758-20	C	20

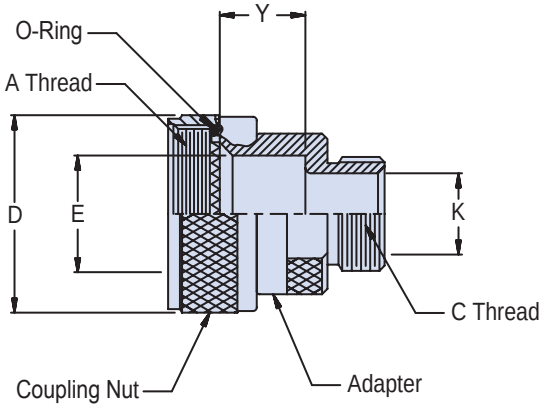

APPLICATION NOTES

1. Assembly identified with manufacurer's code identification number (Glenair, part number and classification code 490).
2. The M24758-20 adapter couples connectors listed in table II to M24758-2, M24758-3 or M24758-4 series fittings.
3. The coupling nut end of this adapter shall conform to AS85049.
4. The E diameter and M thread of this drawing are the same as AS85049 and are included for reference purposes.
5. See Glenair Circular Connector Accessories catalog for recommended torque values.
6. Material / Finish:
   Adapter, coupling nut, 316 / electroless nickel, matte finish,
   O-ring - silicone rubber N/A.
7. Metric dimensions (mm) are indicated in parentheses.

TABLE I

CONDUIT SIZE CODE	C CLASS - 2A THREAD	K DIA MIN
A	.438-28 UNEF	.245 (6.22)
B	.688-24 UNEF	.495 (12.57)
C	.938-20 UNEF	.745 (18.92)
D	1.250-18 UNEF	.995 (25.27)
E	1.563-18 UNEF	1.245 (31.62)
F	1.875-16 UN	1.495 (37.97)
G	2.375-16 UN	1.995 (50.67)
H	2.875-16 UN	2.495 (63.37)
J	.563-24 UNEF	.370 (9.40)
K	.813-20 UNEF	.620 (15.75)
L	3.375-16 UN	2.995 (76.07)

© 2013 Glenair, Inc.

TABLE II: CONNECTOR DASH NUMBERS AND FITTING DIMENSIONS

CONN DASH NO.	MIL-DTL-38999 SERIES 1 & 2	MIL-DTL-38999 SERIES 3 & 4	A Class - 2B THREAD	D DIA MAX	E DIA REF	Y (Style 01) ± .03 (0.8)
08	08	--	.438-28 UNEF	.860 (21.84)	.269 (6.83)	.620 (15.7)
10	10	--	.562-24 UNEF	.980 (24.89)	.402 (10.21)	.620 (15.7)
12	12	--	.688-24 UNEF	1.160 (29.46)	.516 (13.11)	.620 (15.7)
14	14	--	.812-20 UNEF	1.280 (32.51)	.641 (16.28)	.620 (15.7)
16	16	--	.938-20 UNEF	1.410 (35.81)	.766 (19.46)	.750 (19.1)
18	18	--	1.062-18 UNEF	1.520 (38.61)	.863 (21.92)	.750 (19.1)
20	20	--	1.188-18 UNEF	1.640 (41.66)	.988 (25.10)	.750 (19.1)
22	22	--	1.312-18 UNEF	1.770 (44.96)	1.113 (28.70)	.810 (20.6)
24	24	--	1.438-18 UNEF	1.890 (48.01)	1.238 (31.45)	.810 (20.6)
09	--	A / 09	M12 X 1.0 - 6H	.860 (21.84)	.269 (6.83)	.620 (15.7)
11	--	B / 11	M15 X 1.0 - 6H	.980 (24.89)	.402 (10.21)	.620 (15.7)
13	--	C / 13	M18 X 1.0 - 6H	1.160 (29.46)	.516 (13.11)	.690 (17.5)
15	--	D / 15	M22 X 1.0 - 6H	1.280 (32.51)	.641 (16.28)	.690 (17.5)
17	--	E / 17	M25 X 1.0 - 6H	1.410 (35.81)	.766 (19.46)	.750 (19.1)
19	--	F / 19	M28 X 1.0 - 6H	1.520 (38.61)	.863 (21.92)	.750 (19.1)
21	--	G / 21	M31 X 1.0 - 6H	1.640 (41.66)	.988 (25.10)	.750 (19.1)
23	--	H / 23	M34 X 1.0 - 6H	1.770 (44.96)	1.113 (28.70)	.810 (20.6)
25	--	J / 25	M37 X 1.0 - 6H	1.890 (48.01)	1.238 (31.45)	.810 (20.6)

© 2013 Glenair, Inc.

MIL-PRF-24758-21
Adapter for MIL-DTL-22992 Connectors

Basic Number	Conduit Size Code *(Table I)*	Connector Dash Code *(Table II)*
M24758-21	C	20

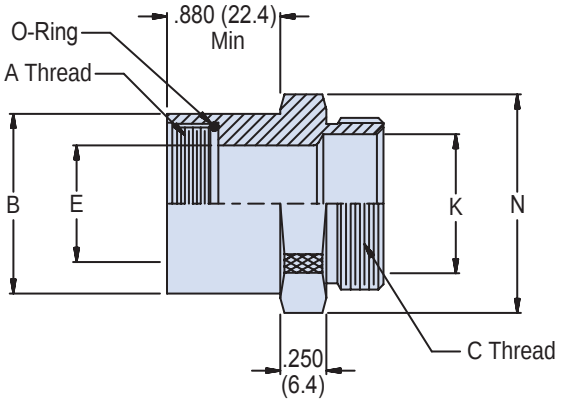

APPLICATION NOTES

1. Assembly identified with manufacurer's code identification number (Glenair, part number and classification code 490).
2. The M24758-21 adapter couples connectors listed in table I to M24758-2, M24758-3 or M24758-4 series fittings.
3. This adapter shall conform to military standard MIL-DTL-22992 connector.
4. The E diameter and M thread of this drawing are included for reference purposes.
5. See Glenair Circular Connector Accessories catalog for recommended torque values.
6. Material / Finish:
   Adapter, coupling nut - 316 / electroless nickel, matte finish.
   O-ring - silicone rubber.
7. Metric dimensions (mm) are indicated in parentheses.

© 2013 Glenair, Inc.

TABLE I		
CONDUIT SIZE CODE	C CLASS - 2A THREAD	K DIA MIN
A	.438-28 UNEF	.245 (6.22)
B	.688-24 UNEF	.495 (12.57)
C	.938-20 UNEF	.745 (18.92)
D	1.250-18 UNEF	.995 (25.27)
E	1.563-18 UNEF	1.245 (31.62)
F	1.875-16 UN	1.495 (37.97)
G	2.375-16 UN	1.995 (50.67)
H	2.875-16 UN	2.495 (63.37)
J	.563-24 UNEF	.370 (9.40)
K	.813-20 UNEF	.620 (15.75)
L	3.375-16 UN	2.995 (76.07)

TABLE II: CONNECTOR DASH NUMBERS AND ADAPTER DIMENSIONS				
CONN DASH NO.	MIL-DTL-22992	A LEFT HAND CLASS - 2B THREAD	B DIA MAX	E DIA REF
12	12	.750-20 UNEF	.858 (21.79)	.600 (15.24)
14	14	.875-20 UNEF	.984 (24.99)	.720 (18.29)
16	16	1.000-20 UNEF	1.112 (28.45)	.840 (21.34)
18	18	1.125-18 UNEF	1.218 (30.94)	.940 (23.88)
20	20	1.250-18 UNEF	1.345 (34.16)	1.100 (27.94)
22	22	1.375-18 UNEF	1.468 (37.29)	1.200 (30.48)
24	24	1.625-18 UNEF	1.593 (40.46)	1.440 (36.58)
28	28	1.875-16 UN	1.969 (50.01)	1.690 (42.93)
32	32	2.062-16 UNS	2.219 (56.34)	1.880 (47.75)
36	36	2.312-16 UN	2.469 (62.71)	2.130 (54.10)
40	40	2.625-16 UN	2.719 (69.06)	2.440 (61.98)
44	44	2.875-16 UN	2.969 (75.41)	2.750 (68.85)
48	48	3.125-16 UN	3.219 (81.76)	2.880 (73.15)

© 2013 Glenair, Inc.

MIL-PRF-24758-22
For Glenair 22 Series Adapters

Basic Number	Conduit Size Code *(Table I)*	
M24758-22	C	16

Shell Size *(Table II)*

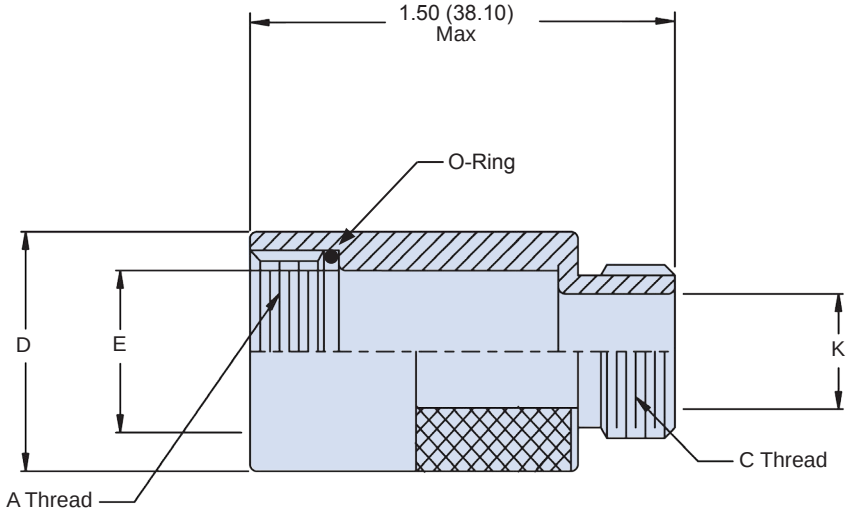

APPLICATION NOTES

1. Assembly identified with manufacurer's code identification number (Glenair, part number and classification code 490).
2. The M24758-22 adapter couples Glenair series 22 connectors to M24758-2, M24758-3 or M24758-4 series fittings.
3. See Glenair Circular Connector Accessories catalog for recommended torque values.
4. Material / Finish:
   Adapter, coupling nut - 316 / electroless nickel, matte finish.
   O-ring - silicone rubber.
5. Metric dimensions (mm) are indicated in parentheses.

© 2013 Glenair, Inc.

GLENAIR, INC. • 1211 AIR WAY • GLENDALE, CA 91201-2497 • 818-247-6000 • FAX 818-500-9912
www.glenair.com
E-Mail: sales@glenair.com

TABLE I		
CONDUIT SIZE CODE	C CLASS - 2A THREAD	K DIA MIN
A	.438-28 UNEF	.245 (6.22)
B	.688-24 UNEF	.495 (12.57)
C	.938-20 UNEF	.745 (18.92)
D	1.250-18 UNEF	.995 (25.27)
E	1.563-18 UNEF	1.245 (31.62)
F	1.875-16 UN	1.495 (37.97)
G	2.375-16 UN	1.995 (50.67)
H	2.875-16 UN	2.495 (63.37)
J	.563-24 UNEF	.370 (9.40)
K	.813-20 UNEF	.620 (15.75)
L	3.375-16 UN	2.995 (76.07)

TABLE II			
CONN SHELL SIZE	A CLASS - 2B THREAD	D DIA ± .02 (0.5)	E DIA REF
10	.625-24 UNEF	.750 (19.05)	.430 (10.92)
12	.750-20 UNEF	.875 (22.23)	.540 (13.72)
14	.875-20 UNEF	1.000 (25.40)	.660 (16.76)
16	1.000-20 UNEF	1.125 (28.58)	.790 (20.07)
18	1.125-16 UN	1.250 (31.75)	.880 (22.35)
20	1.250-16 UN	1.375 (34.93)	1.000 (25.40)
22	1.375-16 UN	1.500 (38.10)	1.130 (28.70)
24	1.500-16 UN	1.625 (41.28)	1.250 (31.75)

© 2013 Glenair, Inc.

MIL-PRF-24758-23
Union Fitting

Basic Number	Conduit Size Code *(Table I)*
M24758-23	C

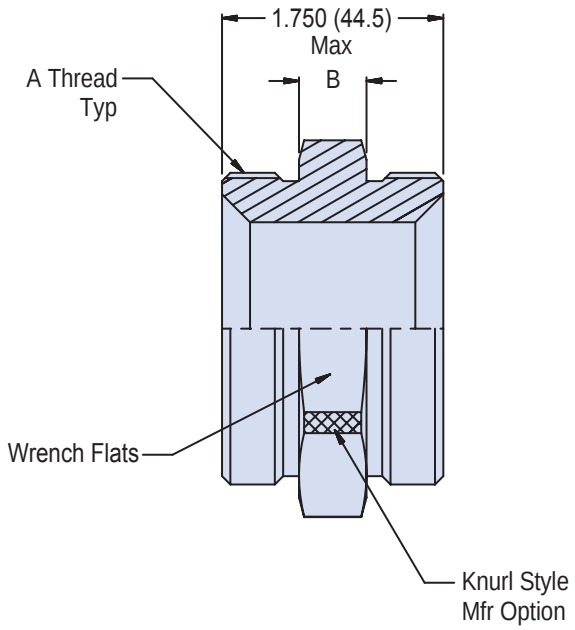

TABLE I

CONDUIT SIZE CODE	C CLASS - 2A THREAD	B ± .06 (1.52) DIM
A	.438-28 UNEF	.500 (12.70)
B	.688-24 UNEF	.560 (14.22)
C	.938-20 UNEF	.620 (15.75)
D	1.250-18 UNEF	.620 (15.75)
E	1.563-18 UNEF	.680 (17.27)
F	1.875-16 UN	.680 (17.27)
G	2.375-16 UN	.750 (19.05)
H	2.875-16 UN	.750 (19.05)
J	.563-24 UNEF	.500 (12.70)
K	.813-20 UNEF	.560 (14.22)
L	3.375-16 UN	.750 (19.05)

APPLICATION NOTES

1. Assembly identified with manufacurer's code identification number (Glenair, part number and classification code 490).
2. The M24758-23 union fitting couples to Glenair M24758-2, M24758-3 or M24758-4 series fittings.
3. See Glenair Circular Connector Accessories catalog for recommended torque values.
4. Material / Finish:
   Adapter, coupling nut - 316 / electroless nickel, matte finish.
5. Metric dimensions (mm) are indicated in parentheses.

© 2013 Glenair, Inc.

GLENAIR, INC. • 1211 AIR WAY • GLENDALE, CA 91201-2497 • 818-247-6000 • FAX 818-500-9912
www.glenair.com
E-Mail: sales@glenair.com

MIL-PRF-24758-24
Individual Termination Adapter

Basic Number	Conduit Size Code *(Table I)*
M24758-24	C

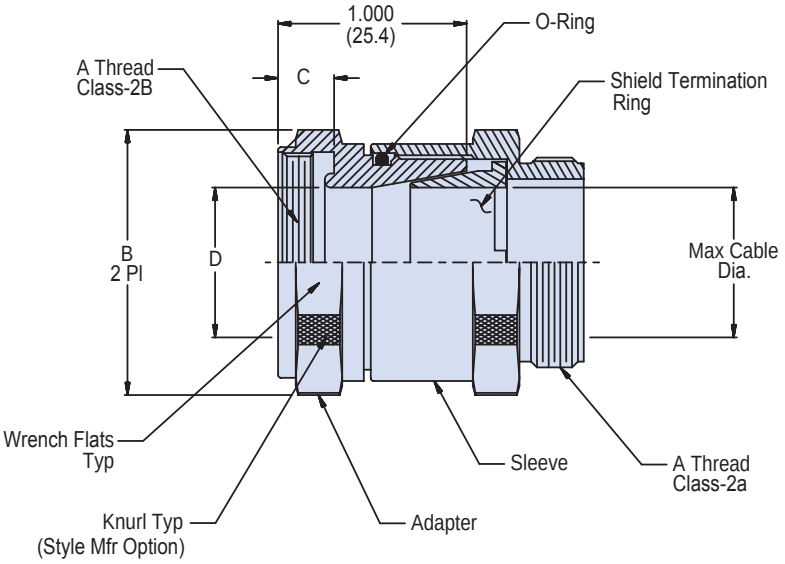

APPLICATION NOTES

1. Assembly identified with manufacurer's code identification number (Glenair, part number and classification code 490).
2. The function of the M24758-24 fitting is to couple with M24758-9 through M24758-23 fittings, terminate individual cable shields and to provide a standard thread for attaching all M24758-2, M24758-3 or M24758-4 fittings.
3. See Glenair Circular Connector Accessories catalog for recommended torque values.
4. Material / Finish:
   Adapter, coupling nut - 316 / electroless nickel, matte finish.
   O-Ring - silicone rubber/N.A.
5. Metric dimensions (mm) are indicated in parentheses.

TABLE I

CONDUIT SIZE CODE	A CLASS - 2* THREAD	D DIA MAX	C +.00 -.03 (0.8)	B DIA MIN	MAX CABLE DIA
A	.438-28 UNEF	.880 (22.35)	.250 (5.21)	.245 (6.22)	.220 (5.59)
B	.688-24 UNEF	1.130 (28.70)	.245 (6.22)	.495 (12.57)	.445 (11.30)
C	.938-20 UNEF	1.380 (35.05)	.305 (7.75)	.745 (18.92)	.670 (17.02)
D	1.250-18 UNEF	1.620 (41.15)	.350 (8.89)	1.015 (25.78)	.895 (22.73)
E	1.563-18 UNEF	2.000 (50.80)	.365 (9.27)	1.245 (31.62)	1.120 (28.45)
F	1.875-16 UN	2.310 (58.67)	.425 (10.80)	1.495 (37.97)	1.345 (34.16)
G	2.375-16 UN	2.940 (74.68)	.425 (10.80)	1.995 (50.67)	1.795 (45.59)
H	2.875-16 UN	3.440 (87.38)	.425 (10.80)	2.495 (63.37)	2.245 (57.02)
J	.563-24 UNEF	.940 (23.88)	.245 (6.22)	.370 (9.40)	.333 (8.46)
K	.813-20 UNEF	1.190 (30.23)	.305 (7.75)	.620 (15.75)	0.558 (14.17)
L	3.375-16 UN	3.940 (100.08)	.425 (10.80)	2.995 (76.07)	2.695 (68.45)

© 2013 Glenair, Inc.

MIL-PRF-24758-25
Adapter for Panel Termination

Basic Number	Conduit Size Code *(Table I)*
M24758-25	C

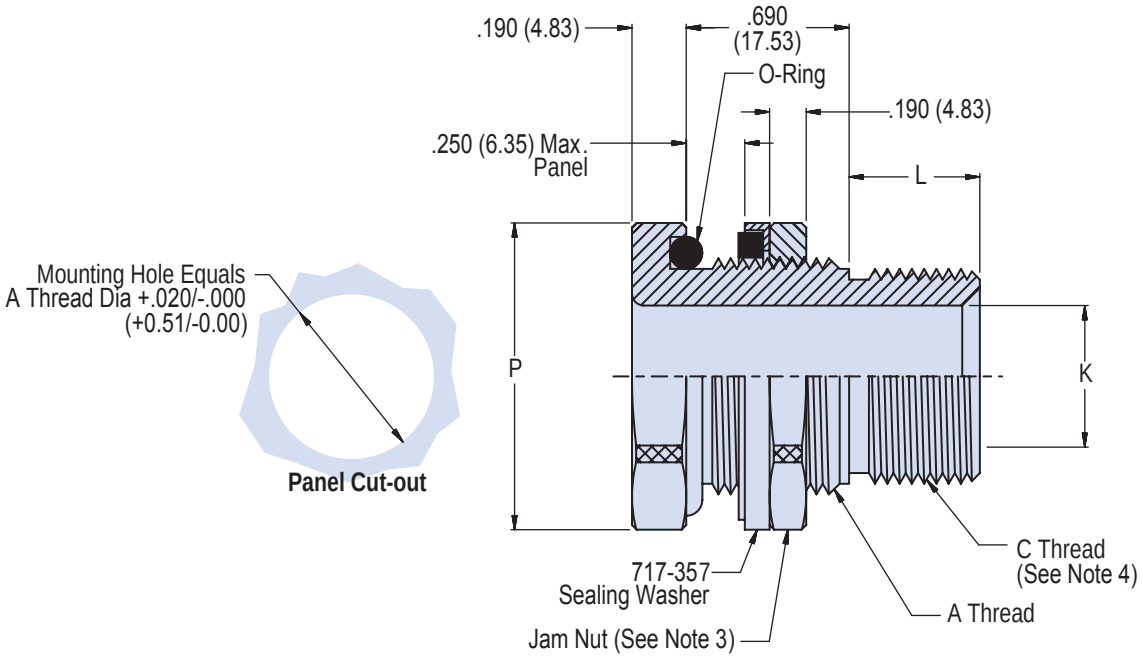

APPLICATION NOTES

1. Assembly identified with manufacurer's code identification number (Glenair, part number and classification code 490).
2. The M24758-25 adapter provides the capability of terminating a M24758-2, M24758-3 or M24758-4 series fitting to a panel.
3. Use Glenair 600-176 jam nut wrench.
4. See M24758-2 for C thread torque values.
5. Metric dimensions (mm) are indicated in parentheses.
6. Material / Finish:
   Adapter, jam nut - 316 electroless nickel, matte finish
   O-Ring - silicone rubber/N.A.
   Sealing washer - See individual drawing.

© 2013 Glenair, Inc.

GLENAIR, INC. • 1211 AIR WAY • GLENDALE, CA 91201-2497 • 818-247-6000 • FAX 818-500-9912
www.glenair.com
E-Mail: sales@glenair.com

TABLE I					
CONDUIT SIZE CODE	A CLASS - 2A THREAD	P DIA	C CLASS - 2A THREAD	K DIA MIN	Recommended Torque Values[3]
A	.625-24 UNEF	1.000 (25.40)	.438-28 UNEF	.245 (6.22)	40 - 50
B	.875-20 UNEF	1.250 (31.75)	.688-24 UNEF	.495 (12.57)	50 - 60
C	1.188-18 UNEF	1.562 (39.67)	.938-20 UNEF	.745 (18.92)	
D	1.438-18 UNEF	1.812 (46.02)	1.250-18 UNEF	.995 (25.27)	80 - 90
E	1.750-16 UN	2.125 (53.98)	1.563-18 UNEF	1.245 (31.62)	
F	2.000-16 UN	2.375 (60.33)	1.875-16 UN	1.495 (37.97)	100 - 110
G	2.500-16 UN	2.875 (73.03)	2.375-16 UN	1.995 (50.67)	150 - 160
H	3.000-16 UN	3.375 (85.73)	2.875-16 UN	2.495 (63.37)	
J	.750-20 UNEF	1.125 (28.58)	.563-24 UNEF	.370 (9.40)	50 - 60
K	1.000-20 UNEF	1.500 (38.10)	.813-20 UNEF	.620 (15.75)	
L	3.500-16 UN	4.375 (111.13)	3.375-16 UN	2.995 (76.07)	150 - 160

NOTE: Panel Cut-Out is +.016 (0.41) -.000 over A Thread Size.

© 2013 Glenair, Inc.

MIL-PRF-24758-26
Adapter for Panel Termination

Basic Number	Conduit Size Code *(Table I)*	Panel Fitting Thread Size Code *(Table II)*
M24758-26	C	32

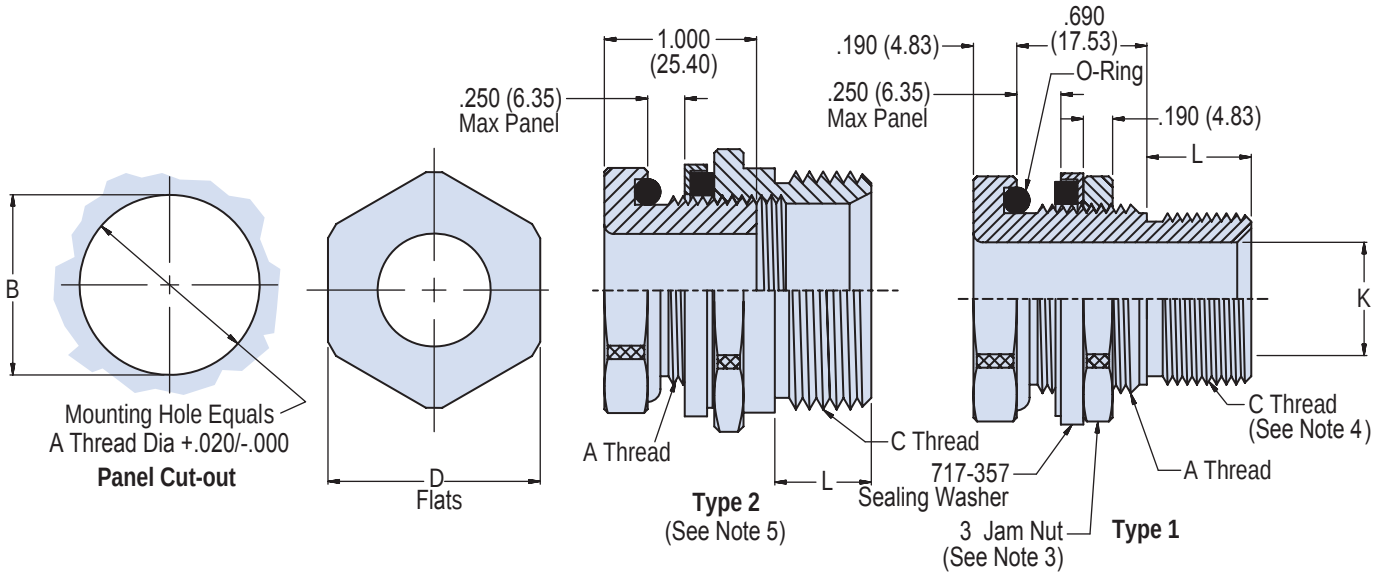

APPLICATION NOTES

1. Assembly identified with manufacurer's code identification number (Glenair, part number and classification code 490).
2. The M24758-26 adapter provides the capability of terminating a M24758-2, M24758-3 or M24758-4 fitting to a panel.
3. Use Glenair 600-176 jam nut wrench.
4. See M24758-2 for C thread torque values.
5. Type 2 supplied when C thread exceeds A thread (see Table II).
6. Metric dimensions (mm) are indicated in parentheses.
7. Material / Finish:
   Adapter, jam nut - 316L stainless steel/electroless nickel, matte finish
   O-Ring - silicone rubber/N.A.
   Sealing washer - See individual drawing.

© 2013 Glenair, Inc. CAGE Code 06324 Printed in U.S.A.

TABLE I			
CONDUIT SIZE CODE	C CLASS - 2A THREAD	L + .03 (0.76) - .00	K DIA MIN
A	.438-28 UNEF	.210 (5.33)	.245 (6.22)
B	.688-24 UNEF	.250 (6.35)	.495 (12.57)
C	.938-20 UNEF	.310 (7.87)	.745 (18.92)
D	1.250-18 UNEF	.370 (9.40)	.995 (25.27)
E	1.563-18 UNEF	.370 (9.40)	1.245 (31.62)
F	1.875-16 UN	.430 (10.92)	1.495 (37.97)
G	2.375-16 UN	.430 (10.92)	1.995 (50.67)
H	2.875-16 UN	.430 (10.92)	2.495 (63.37)
J	.563-24 UNEF	.250 (6.35)	.370 (9.40)
K	.813-20 UNEF	.310 (7.87)	.620 (15.75)
L	3.375-16 UN	.430 (10.92)	2.995 (76.07)

TABLE II						
DASH NO	A CLASS - 2A THREAD	B +.03 (0.8) -.00	D FLATS	MAX SIZE CODE (TABLE I)		RECOMMENDED TORQUE VALUES INCH LBS (See Note 3)
20	5/8-24 UNEF	.630 (16.0)	.875 (22.2)	J	B	40 – 50
24	3/4-20 UNEF	.750 (19.1)	1.000 (25.4)	B	K	50 – 60
28	7/8-20 UNEF	.880 (22.4)	1.125 (28.6)	K	C	
32	1-20 UNEF	1.000 (25.4)	1.250 (31.8)	C	–	
36	1 1/8-18 UNEF	1.130 (28.7)	1.375 (34.9)	C	D	
40	1 1/4-18 UNEF	1.250 (31.8)	1.500 (38.1)	D	–	80 – 90
42	1 5/16-18 UNEF	1.310 (33.3)	1.625 (41.3)	D	–	
48	1 1/2-18 UNEF	1.500 (38.1)	1.750 (44.5)	D	E	
56	1 3/4-16 UN	1.750 (55.5)	2.000 (50.8)	E	F	
64	2-16 UN	2.000 (50.8)	2.500 (63.50)	F	–	100 – 110
80	2 1/2-16 UN	2.500 (63.50)	2.750 (69.85)	G	–	150 – 160
96	3-16 UN	3.000 (76.20)	3.000 (76.20)	H	–	
112	3 1/2-16 UN	3.500 (88.90)	3.750 (95.25)	L	–	
				Type 1	Type 2	

© 2013 Glenair, Inc.

MIL-PRF-24758-27
90° Adapter for Tapered Pipe Thread

Basic Number	Conduit Size Code *(Table I)*	Dash No. *(Table II)*
M24758-27	C	32

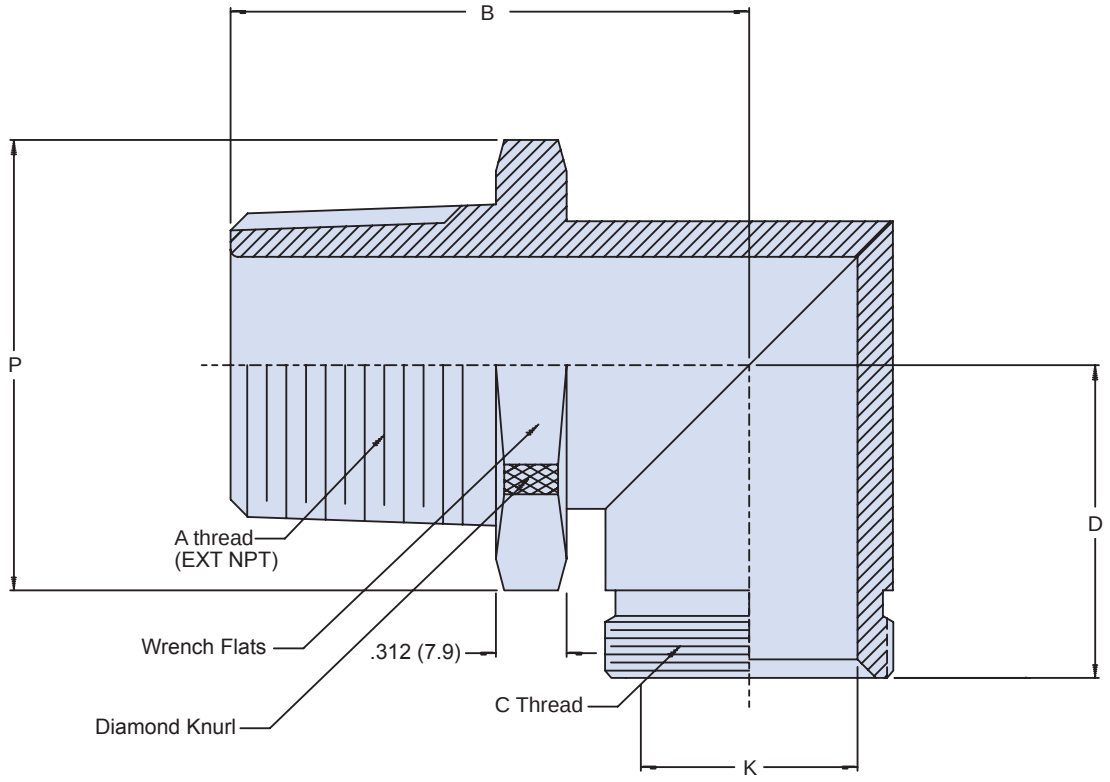

APPLICATION NOTES

1. Assembly identified with manufacurer's code identification number (Glenair, part number and classification code 490).
2. The M24758-27 adapter couples any fittings having a female tapered pipe thread to M24758-2, M24758-3 or M24758-4 fittings.
3. Material / Finish:
   Elbow - 316 / electroless nickel, matte finish
4. Metric dimensions (mm) are indicated in parentheses.

© 2013 Glenair, Inc.

GLENAIR, INC. • 1211 AIR WAY • GLENDALE, CA 91201-2497 • 818-247-6000 • FAX 818-500-9912
www.glenair.com
E-Mail: sales@glenair.com

TABLE I: CONDUIT SIZE CODE				
CONDUIT SIZE CODE	C CLASS - 2A THREAD	D DIM	K DIA MIN	MAX ENTRY DASH NO.
B	.688-24 UNEF	.890 (22.6)	.495 (12.57)	03

TABLE II: DASH NUMBER			
DASH NO	A EXTERNAL TAPER PIPE THREAD	B DIM	P MAX DIA
03	.500-14 NPT	1.570 (39.9)	1.250 (31.8)

© 2013 Glenair, Inc.

GLENAIR, INC. • 1211 AIR WAY • GLENDALE, CA 91201-2497 • 818-247-6000 • FAX 818-500-9912
www.glenair.com
E-Mail: sales@glenair.com

MIL-PRF-24758-28
Straight Conduit Fitting to PEEK Conduit

Basic Number	Conduit Size Code *(Table I)*	
M24758-28	A	12

PEEK Conduit Size
(Table II--Omit for Standard Size)

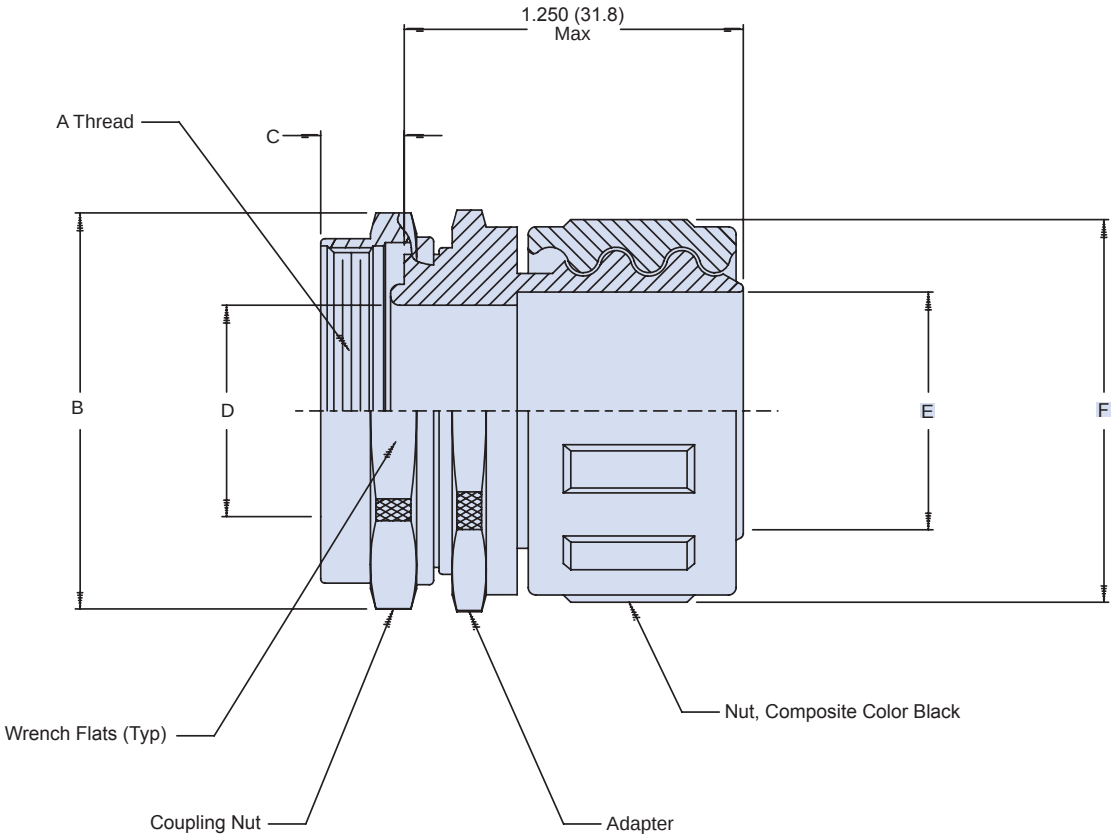

APPLICATION NOTES

1. Assembly identified with manufacurer's code identification number (Glenair, part number and classification code 490).
2. The function of the M24758-28 fitting is to terminate A-A-59827 PEEK conduit and to provide a standard thread for attaching M24758-15 and -25 fittings.
3. Material / Finish:
   Adapter, coupling nut - 316 / electroless nickel, matte finish
   Conduit nut - Ultem 7301, black
4. Metric dimensions (mm) are indicated in parentheses.

© 2013 Glenair, Inc. CAGE Code 06324 Printed in U.S.A.

TABLE I: CONDUIT SIZE CODE					
CONDUIT SIZE CODE	A CLASS - 2B THREAD	B MAX DIA	C +00 -.03 (0.8)	D MIN DIA	STANDARD SIZE CONDUIT
A	.438-28 UNEF	.880 (22.4)	.205 (5.2)	.245 (6.2)	09
B	.688-24 UNEF	1.130 (28.7)	.245 (6.2)	.495 (12.6)	12
C	.938-20 UNEF	1.380 (35.1)	.305 (7.7)	.745 (18.9)	24
D	1.250-18 UNEF	1.690 (42.9)	.365 (9.3)	.995 (25.3)	32
E	1.563-18 UNEF	2.000 (50.8)	.365 (9.3)	1.245 (31.6)	40
F	1.875-16 UN	2.310 (58.7)	.425 (10.8)	1.495 (38.0)	48
G	2.375-16 UN	2.940 (74.7)	.425 (10.8)	1.995 (50.7)	64
H	2.875-16 UN	3.440 (87.4)	.425 (10.8)	2.495 (63.4)	N/A
J	.563-24 UNEF	.940 (23.9)	.245 (6.2)	.370 (9.4)	16
K	.813-20 UNEF	1.190 (30.2)	.305 (7.7)	.620 (15.7)	20
L	3.375-16 UN	3.940 (100.1)	.425 (10.8)	2.995 (76.1)	N/A

TABLE II: PEEK CONDUIT SIZE		
PEEK CONDUIT SIZE CODE	E	F MAX
09	.210 (5.3)	.640 (16.3)
12	.320 (8.1)	.760 (19.3)
14	.360 (9.1)	.830 (21.1)
16	.420 (10.7)	.890 (22.6)
20	.550 (14.0)	1.020 (25.9)
24	.680 (17.3)	1.200 (30.5)
28	.790 (20.1)	1.300 (33.0)
32	.910 (23.1)	1.390 (35.3)
40	1.160 (29.5)	1.730 (43.9)
48	1.410 (35.8)	1.970 (50.0)

© 2013 Glenair, Inc.

MIL-PRF-24758-29
Adapter for Miscellaneous Termination

Basic Number	Conduit Size Code *(Table I)*	Dash No. *(Table II)*
M24758-29	B	01

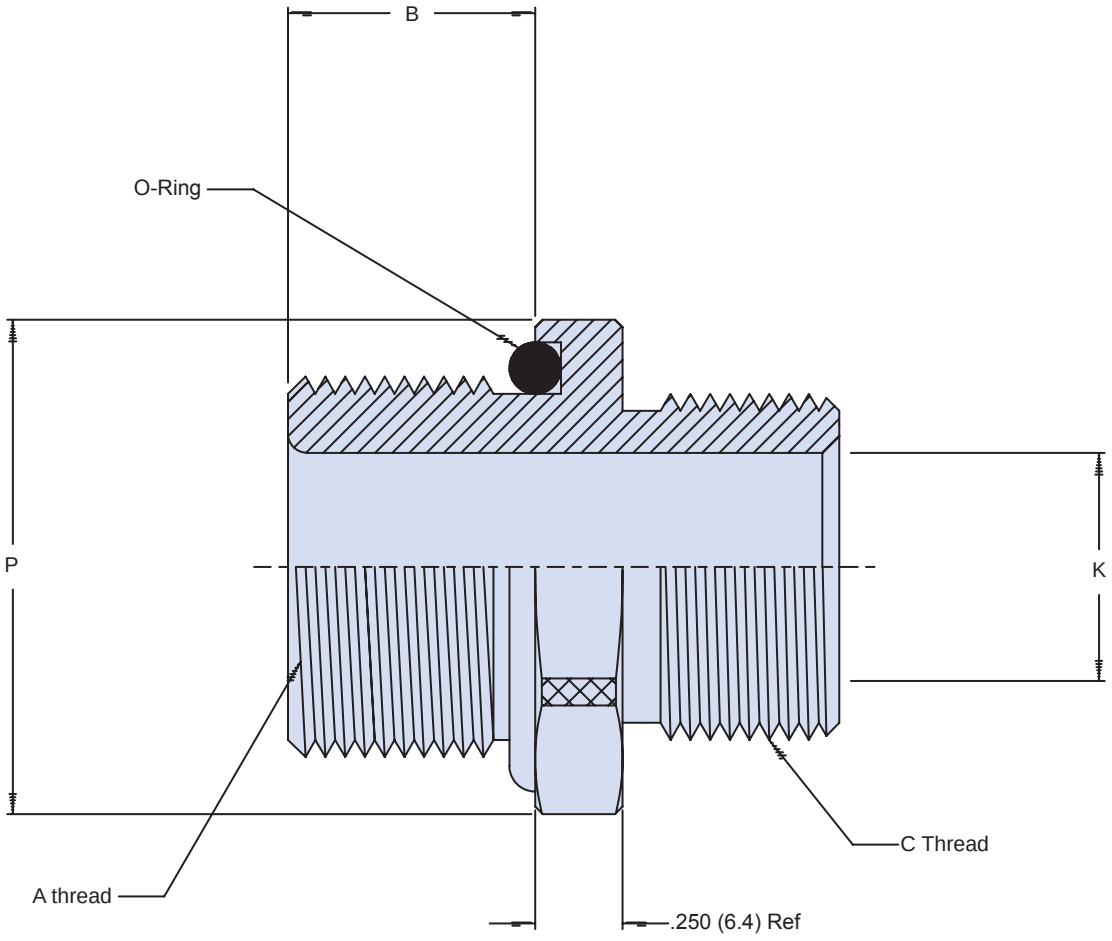

© 2013 Glenair, Inc.

GLENAIR, INC. • 1211 AIR WAY • GLENDALE, CA 91201-2497 • 818-247-6000 • FAX 818-500-9912
www.glenair.com
E-Mail: sales@glenair.com

TABLE I: CONDUIT SIZE CODE		
CONDUIT SIZE CODE	C CLASS - 2A THREAD	K DIA MIN
B	.688-24 UNEF	.495 (12.57)
C	.938-20 UNEF	.745 (18.9)

TABLE II: DASH NUMBER			
DASH NO	A CLASS -2A THREAD	B DIM	P MAX DIA
01	.875-18 UNS	.250 (6.35)	1.280 (32.5)

APPLICATION NOTES

1. Assembly identified with manufacurer's code identification number (Glenair, part number and classification code 490).
2. The M24758-29 mates with the Amphenol RJF (Ethernet) connector (replace rear nut with this fitting).
3. Material / Finish:
   Adapter - 316 / electroless nickel, matte finish
   O-Ring - silicone rubber / N.A.
4. Metric dimensions (mm) are indicated in parentheses.

© 2013 Glenair, Inc.

GLENAIR, INC. • 1211 AIR WAY • GLENDALE, CA 91201-2497 • 818-247-6000 • FAX 818-500-9912
www.glenair.com
E-Mail: sales@glenair.com

MIL-PRF-24758-30
90° Elbow for MIL-S-24235 Stuffing Tubes

Basic Number	Stuffing Tube Size *(Table I)*	Conduit Size Code *(Table II)*
M24758-30	C	C

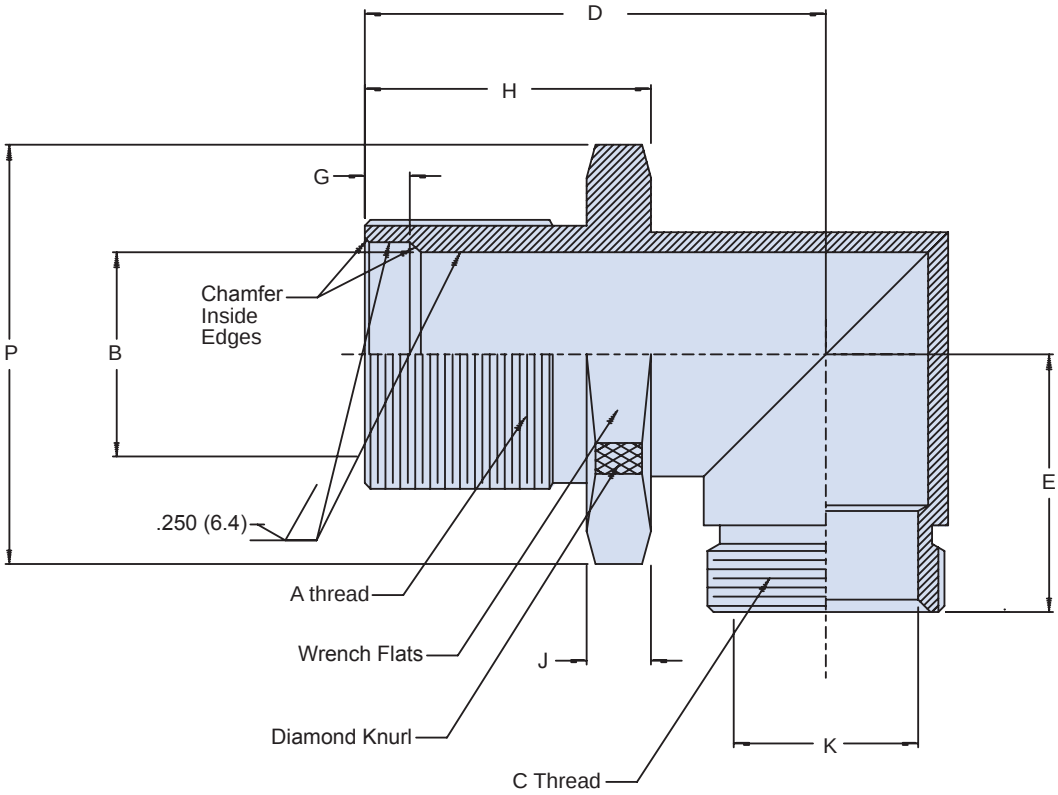

APPLICATION NOTES

1. Assembly identified with manufacurer's code identification number (Glenair, part number and classification code 490).
2. The M24758-30 adapter couples MIL-S-24235/9 through MIL-S-24235/17 stuffing tubes to M24758-2, M24758-3 or M24758-4 fittings.
3. Material / Finish:
   Adapter - 316/Electroless nickel, matte finish
4. Metric dimensions (mm) are indicated in parentheses.

© 2013 Glenair, Inc.

MIL-PRF-24758-30
90° Elbow for MIL-S-24235 Stuffing Tubes

Glenair®

TABLE I: STUFFING TUBE SIZE

MIL-S-24235/9, /17 STUFFING TUBE SIZE	CONDUIT SIZE CODE	A CLASS -2A THREAD	B DIA	D MAX	E MAX	G DIM	H ±.02 (0.5)	J ±.02 (0.5)	P DIA MIN
A	B, J	.875-12 UN	.406 (10.3)			.250 (6.4)	1.063 (27.0)	.188 (4.8)	1.375 (34.9)
B	B, K	1.000-12 UN	.515 (13.1)	1.780 (45.2)	.950 (24.1)	.250 (6.4)	1.063 (27.0)	.188 (4.8)	1.500 (38.1)
C	C, K	1.125-12 UN	.640 (16.3)			.250 (6.4)	1.063 (27.0)	.188 (4.8)	1.625 (41.3)
D	C, D	1.250-12 UN	.750 (19.1)	1.920 (48.8)	1.200 (30.5)	.250 (6.4)	1.063 (27.0)	.188 (4.8)	1.750 (44.5)
E	C, D	1.250-12 UN	.812 (20.6)			.250 (6.4)	1.063 (27.0)	.188 (4.8)	1.750 (44.5)
F	D	1.313-12 UN	.843 (21.4)			.250 (6.4)	1.188 (30.2)	.188 (4.8)	1.812 (46.0)
G	D	1.500-12 UN	.935 (23.7)			.250 (6.4)	1.188 (30.2)	.188 (4.8)	2.000 (50.8)
J	D, E	1.625-12 UN	1.062 (27.0)			.250 (6.4)	1.188 (30.2)	.188 (4.8)	2.125 (54.0)
K	E	1.750-12 UN	1.171 (29.7)			.250 (6.4)	1.500 (38.1)	.188 (4.8)	2.250 (57.2)
L	E	1.813-12 UN	1.265 (32.1)			.250 (6.4)	1.500 (38.1)	.188 (4.8)	2.312 (58.7)
M	F	2.000-12 UN	1.406 (35.7)			.250 (6.4)	1.500 (38.1)	.188 (4.8)	2.500 (63.5)
N	F	2.063-12 UN	1.515 (38.5)			.250 (6.4)	1.563 (39.7)	.250 (6.4)	2.625 (66.7)
P	G	2.188-12 UN	1.625 (41.3)			.250 (6.4)	1.563 (39.7)	.250 (6.4)	2.750 (69.9)
R	G	2.313-12 UN	1.750 (44.5)			.250 (6.4)	1.563 (39.7)	.250 (6.4)	2.875 (73.0)
S	G	2.688-12 UN	1.875 (47.6)			.375 (9.5)	2.188 (55.6)	.313 (8.0)	3.250 (82.6)
T	G	2.875-12 UN	2.062 (52.4)			.375 (9.5)	2.188 (55.6)	.313 (8.0)	3.500 (88.9)
V	G, H	3.000-12 UN	2.187 (55.5)			.375 (9.5)	2.188 (55.6)	.313 (8.0)	3.625 (92.1)
W	H	3.125-12 UN	2.312 (58.7)			.375 (9.5)	2.188 (55.6)	.313 (8.0)	3.750 (95.3)
X	H	3.250-12 UN	2.500 (63.5)			.375 (9.5)	2.188 (55.6)	.313 (8.0)	3.875 (98.4)
Y	H	3.375-12 UN	2.609 (66.3)			.375 (9.5)	2.188 (55.6)	.313 (8.0)	4.000 (101.6)
Z	L	3.563-12 UN	2.781 (70.6)			.375 (9.5)	2.188 (55.6)	.313 (8.0)	4.250 (108.0)
AA	L	3.750-12 UN	2.875 (73.0)			.375 (9.5)	3.125 (79.4)	.438 (12.3)	4.500 (114.3)
BB	L	4.000-12 UN	3.157 (80.2)			.375 (9.5)	3.125 (79.4)	.438 (12.3)	4.750 (120.7)

TABLE II: CONDUIT SIZE CODE

CONDUIT SIZE CODE	C CLASS -2A THREAD	K DIA MIN
A	.438-28 UNEF	.245 (6.2)
B	.688-24 UNEF	.495 (12.6)
C	.938-24 UNEF	.745 (18.9)
D	1.250-18 UNEF	.995 (25.3)
E	1.563-18 UNEF	1.245 (31.6)
F	1.875-16 UN	1.495 (38.0)
G	2.375-16 UN	1.995 (50.7)
H	2.875-16 UN	2.495 (63.4)
J	.563-24 UNEF	.370 (9.4)
K	.813-20 UNEF	.620 (15.7)
L	3.375-16 UN	2.995 (76.1)

© 2013 Glenair, Inc.

MIL-PRF-24758-31
Adapter for PG Thread

Basic Number	Conduit Size Code *(Table I)*	A Thread Code *(Table II)*
M24758-31	C	16

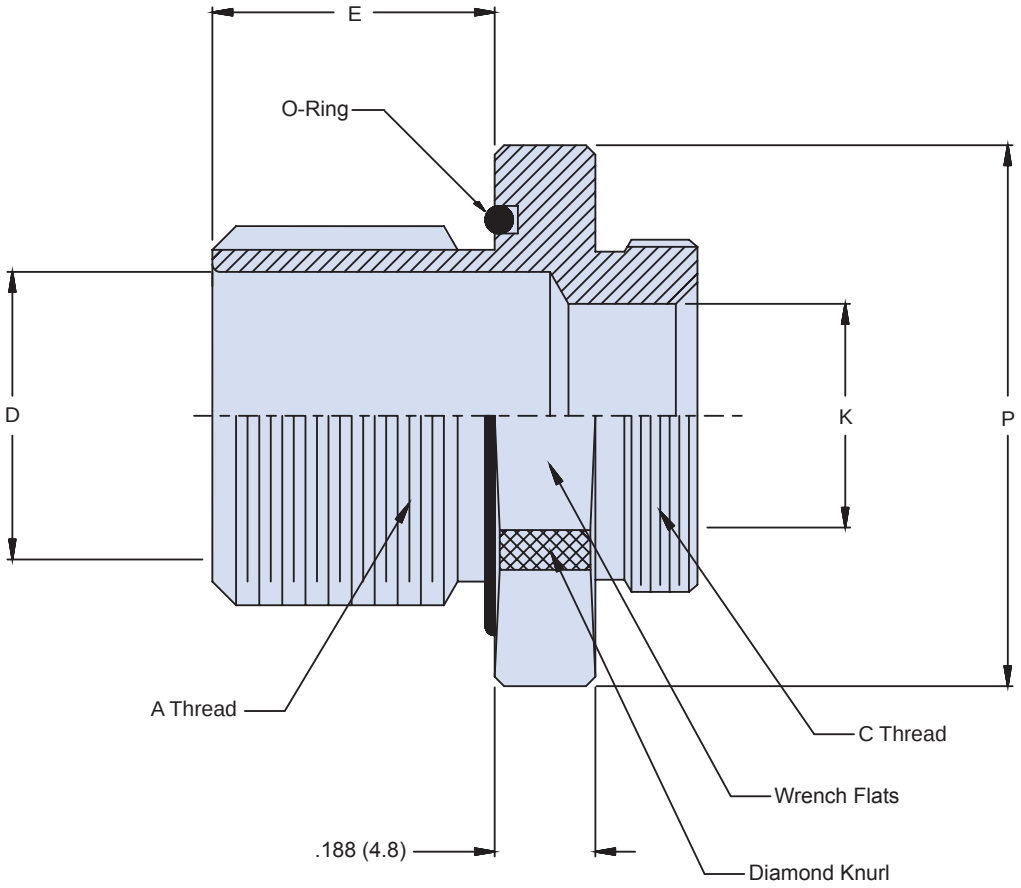

APPLICATION NOTES

1. Assembly identified with manufacurer's code identification number (Glenair, part number and classification code 490).
2. The M24758-31 adapter couples miscellaneous fittings to M24758-2, M24758-3 or M24758-4 fittings.
3. Material / Finish:
   Adapter - 316 SST/Electroless nickel, matte finish.
   O-Ring - Silicone rubber/NA
4. Metric dimensions (mm) are indicated in parentheses.

© 2013 Glenair, Inc.

GLENAIR, INC. • 1211 AIR WAY • GLENDALE, CA 91201-2497 • 818-247-6000 • FAX 818-500-9912
www.glenair.com
E-Mail: sales@glenair.com

TABLE I: CONDUIT SIZE CODE		
CONDUIT SIZE CODE	C CLASS - 2A THREAD	K DIA MIN
A	.438-28 UNEF	.245 (6.22)
B	.688-24 UNEF	.495 (12.57)
C	.938-20 UNEF	.745 (18.92)
D	1.250-18 UNEF	.995 (25.27)
E	1.563-18 UNEF	1.245 (31.62)
F	1.875-16 UN	1.495 (37.97)
G	2.375-16 UN	1.995 (50.67)
H	2.875-16 UN	2.495 (63.37)
J	.563-24 UNEF	.370 (9.40)
K	.813-20 UNEF	.620 (15.75)
L	3.375-16 UN	2.995 (76.07)

TABLE II: A THREAD CODE					
A THREAD CODE	A PG THREAD	D DIA	H DIM	P DIM MAX	CONDUIT SIZE
07	PG 7-20	.315 (8.0)	.275 (7.0)	1.000 (25.4)	A, J
09	PG 9-18	.375 (9.5)	.275 (7.0)	1.130 (28.7)	B, J
11	PG 11-18	.520 (13.2)	.275 (7.0)	1.250 (31.8)	B, K
13	PG 13.5-18	.600 (15.2)	.275 (7.0)	1.250 (31.8)	B, K
16	PG 16-18	.670 (17.0)	.275 (7.0)	1.380 (35.1)	C, K
21	PG 21-16	.890 (22.6)			
29	PG 29-16	1.250 (31.8)			
36	PG 36-16	1.640 (41.7)			
42	PG 42-16	1.910 (48.5)			
48	PG 48-16	2.120 (53.8)			

© 2013 Glenair, Inc.

MIL-PRF-24758-32
90° Transition

Basic Number	Conduit Size Code *(Table I)*
M24758-32	C

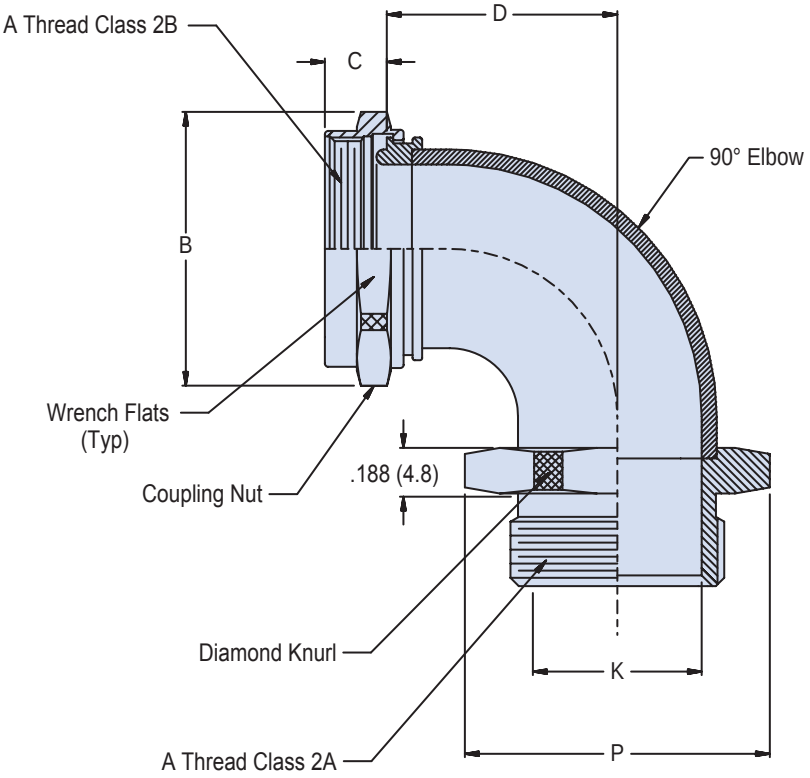

APPLICATION NOTES

1. Assembly identified with manufacurer's code identification number (Glenair, part number and classification code 490).
2. Material / Finish:
   Elbow, coupling nut - 316 SST/Electroless nickel, matte finish.
3. Metric dimensions (mm) are indicated in parentheses.

© 2013 Glenair, Inc.

GLENAIR, INC. • 1211 AIR WAY • GLENDALE, CA 91201-2497 • 818-247-6000 • FAX 818-500-9912
www.glenair.com
E-Mail: sales@glenair.com

TABLE I: CONDUIT SIZE CODE						
CONDUIT SIZE CODE	A THREAD	B MAX DIA	C +.00 -.03 (0.8)	D ±.06 (1.5) DIM	K MIN DIA	P MAX
A	.438-28 UNEF	.880 (22.4)	.205 (5.2)	.810 (20.6)	.245 (6.2)	.880 (22.4)
B	.688-24 UNEF	1.130 (28.7)	.245 (6.2)	1.120 (28.4)	.495 (12.6)	1.130 (28.7)
C	.938-20 UNEF	1.380 (35.1)	.305 (7.7)	1.470 (37.3)	.745 (18.9)	1.380 (35.1)
D	1.250-18 UNEF	1.690 (42.9)	.365 (9.3)	1.810 (46.0)	.995 (25.3)	1.690 (42.9)
E	1.563-18 UNEF	2.000 (50.8)	.365 (9.3)	2.120 (53.8)	1.245 (31.6)	2.000 (50.8)
F	1.875-16 UN	2.310 (58.7)	.425 (10.8)	2.500 (63.5)	1.495 (38.0)	2.310 (58.7)
G	2.375-16 UN	2.940 (74.7)	.425 (10.8)	3.120 (79.2)	1.995 (50.7)	2.940 (74.7)
H	2.875-16 UN	3.440 (87.4)	.425 (10.8)	3.250 (82.6)	2.495 (63.4)	3.440 (87.4)
J	.563-24 UNEF	.940 (23.9)	.245 (6.2)	.930 (23.6)	.370 (9.4)	.940 (23.9)
K	.813-20 UNEF	1.190 (30.2)	.305 (7.7)	1.250 (31.8)	.620 (15.7)	1.190 (30.2)
L	3.375-16 UN	3.940 (100.1)	.425 (10.8)	4.500 (114.3)	2.995 (76.1)	3.940 (100.1)

© 2013 Glenair, Inc.

GLENAIR, INC. • 1211 AIR WAY • GLENDALE, CA 91201-2497 • 818-247-6000 • FAX 818-500-9912
www.glenair.com E-Mail: sales@glenair.com

MIL-PRF-24758-33
90° Elbow for Panel Termination

Basic Number	Conduit Size Code *(Table I)*
M24758-33	C

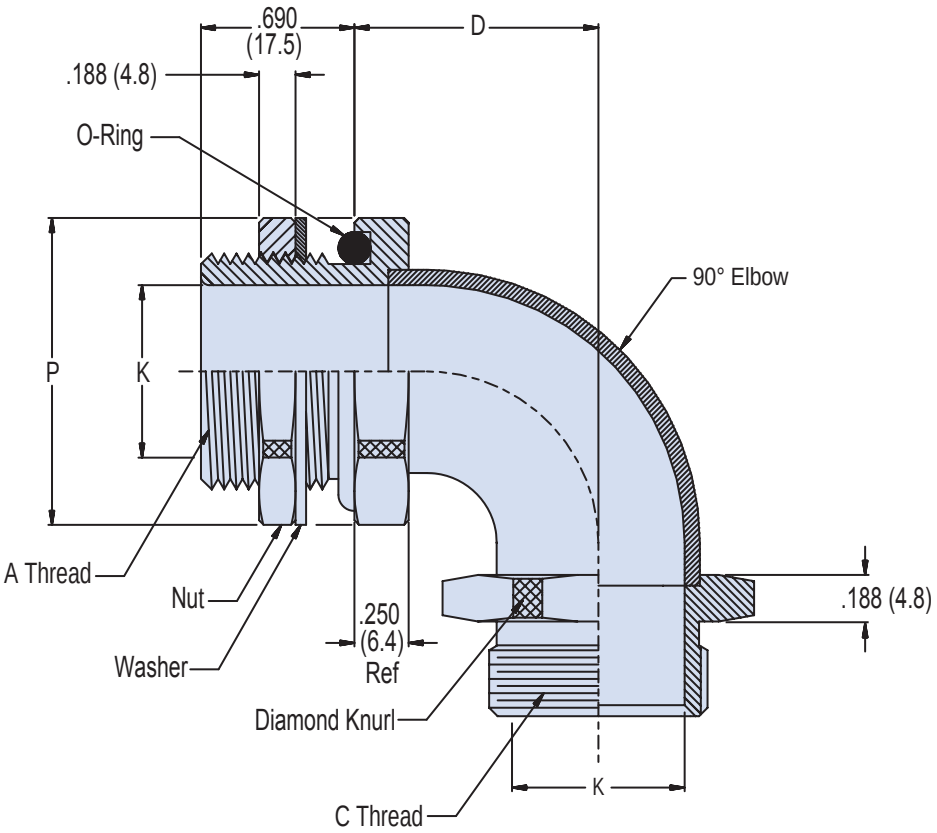

APPLICATION NOTES

1. Assembly identified with manufacurer's code identification number (Glenair, part number and classification code 490).
2. The M24758-33 adapter provides the capability of terminating a M24758-2 fitting to a thread panel.
3. Material / Finish:
   Adapter, jam nut, elbow - 316 SST/Electroless nickel, matte finish.
   O-Ring - Silicone rubber/NA
   Washer - 316 SST/Passivate
4. Metric dimensions (mm) are indicated in parentheses.

© 2013 Glenair, Inc.

TABLE I					
CONDUIT SIZE CODE	A CLASS - 2A THREAD	P DIA	C CLASS - 2A THREAD	K DIA MIN	D REF
A	.625-24 UNEF	1.000 (25.4)	.438-28 UNEF	.245 (6.2)	.810 (20.6)
B	.875-20 UNEF	1.250 (31.8)	.688-24 UNEF	.495 (12.6)	1.120 (28.5)
C	1.188-18 UNEF	1.562 (39.7)	.938-20 UNEF	.745 (18.9)	1.470 (37.3)
D	1.438-18 UNEF	1.812 (46.2)	1.250-18 UNEF	.995 (25.3)	1.810 (46.0)
E	1.750-16 UN	2.125 (53.9)	1.563-18 UNEF	1.245 (31.6)	2.120 (53.9)
F	2.000-16 UN	2.375 (60.3)	1.875-16 UN	1.495 (38.0)	2.500 (63.5)
G	2.500-16 UN	2.875 (73.3)	2.375-16 UN	1.995 (50.7)	3.120 (79.3)
H	3.000-16 UN	3.375 (85.7)	2.875-16 UN	2.495 (63.4)	3.250 (82.6)
J	.750-20 UNEF	1.125 (28.6)	.563-24 UNEF	.370 (9.4)	.930 (23.6)
K	1.000-20 UNEF	1.500 (38.1)	.813-20 UNEF	0.620 (15.8)	1.250 (31.8)
L	3.500-16 UN	3.875 (98.4)	3.375-16 UN	2.995 (76.1)	4.500 (114.3)

© 2013 Glenair, Inc.

MIL-PRF-24758-34
45° Transition

Basic Number	Conduit Size Code *(Table I)*
M24758-34	C

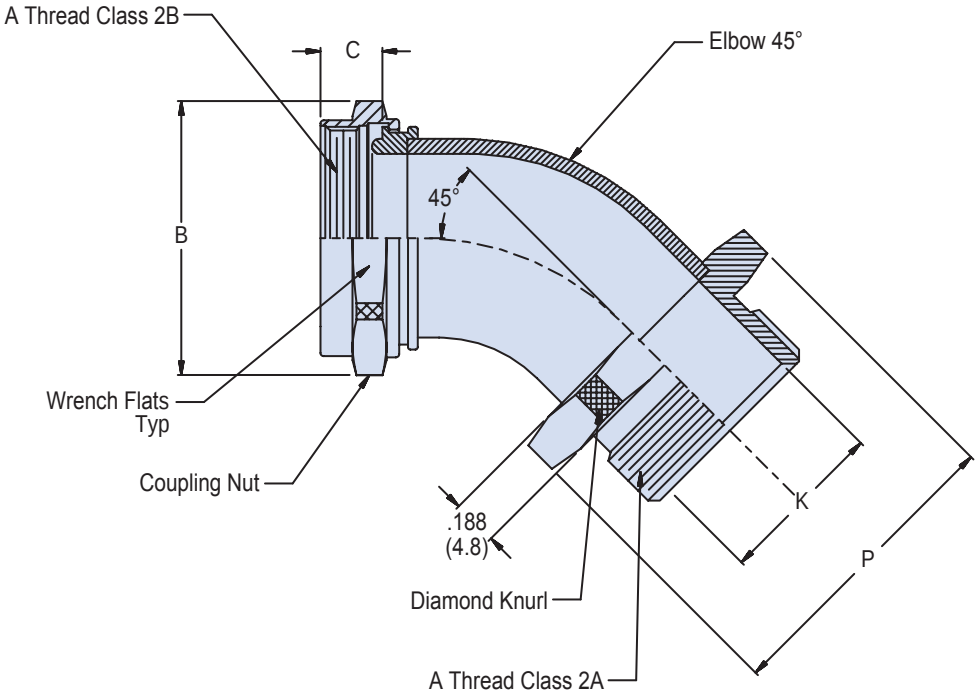

APPLICATION NOTES

1. Assembly identified with manufacurer's code identification number (Glenair, part number and classification code 490).
2. Material / Finish:
   Elbow, coupling nut - 316 SST/Electroless nickel, matte finish.
   O-Ring - Silicone rubber/NA
3. Metric dimensions (mm) are indicated in parentheses.

© 2013 Glenair, Inc.

GLENAIR, INC. • 1211 AIR WAY • GLENDALE, CA 91201-2497 • 818-247-6000 • FAX 818-500-9912
www.glenair.com
E-Mail: sales@glenair.com

TABLE I: CONDUIT SIZE CODE					
CONDUIT SIZE CODE	A THREAD	B MAX DIA	C +.00 -.03 (0.8)	K MIN DIA	P MAX
A	.438-28 UNEF	.880 (22.4)	.205 (5.2)	.245 (6.2)	.880 (22.4)
B	.688-24 UNEF	1.130 (28.7)	.245 (6.2)	.495 (12.6)	1.130 (28.7)
C	.938-20 UNEF	1.380 (35.1)	.305 (7.7)	.745 (18.9)	1.380 (35.1)
D	1.250-18 UNEF	1.690 (42.9)	.365 (9.3)	.995 (25.3)	1.690 (42.9)
E	1.563-18 UNEF	2.000 (50.8)	.365 (9.3)	1.245 (31.6)	2.000 (50.8)
F	1.875-16 UN	2.310 (58.7)	.425 (10.8)	1.495 (38.0)	2.310 (58.7)
G	2.375-16 UN	2.940 (74.7)	.425 (10.8)	1.995 (50.7)	2.940 (74.7)
H	2.875-16 UN	3.440 (87.4)	.425 (10.8)	2.495 (63.4)	3.440 (87.4)
J	.563-24 UNEF	.940 (23.9)	.245 (6.2)	.370 (9.4)	.940 (23.9)
K	.813-20 UNEF	1.190 (30.2)	.305 (7.7)	.620 (15.7)	1.190 (30.2)
L	3.375-16 UN	3.940 (100.1)	.425 (10.8)	2.995 (76.1)	3.940 (100.1)

© 2013 Glenair, Inc.

GLENAIR, INC. • 1211 AIR WAY • GLENDALE, CA 91201-2497 • 818-247-6000 • FAX 818-500-9912
www.glenair.com
E-Mail: sales@glenair.com

MIL-PRF-24758-35
90° Elbow for Connectors Listed in Table I

Basic Number	Connector Designator *A, F, or H* (Table I)		
M24758-35	C	A	16
	Conduit Size Code (Table II)		Connector Dash No. (Table I)

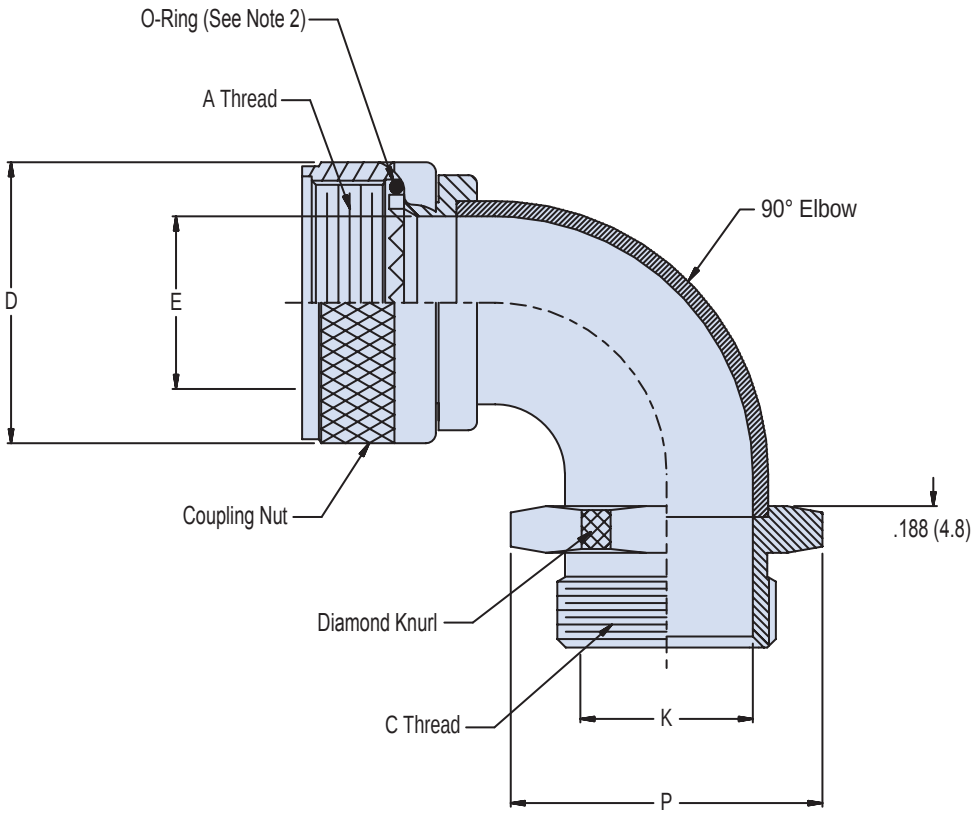

APPLICATION NOTES

1. Assembly identified with manufacurer's code identification number (Glenair, part number and classification code 490).
2. O-Ring not suppplied with connector designator A.
3. See Glenair Circular Connector Accessories catalog for recommended torque values, Group 2.
4. Material / Finish:
   Elbow, coupling nut - 316 SST/Electroless nickel, matte finish.
   O-Ring - Silicone rubber/NA
5. Metric dimensions (mm) are indicated in parentheses.

© 2013 Glenair, Inc. CAGE Code 06324 Printed in U.S.A.

MIL-PRF-24758-35
90° Elbow for Connectors Listed in Table I

Glenair®

TABLE I: Dimensions for CONNECTOR DESIGNATOR A (See Note 2)							
Connector Dash No.	NAS 1599 and MIL-DTL-83723 Series I and III	MIL-DTL-5015 (MS3400 Series)	AS81703 (Navy) Series III	MIL-DTL-26482 SeriesII	A Thread Class - 2B	D Dia Max	E Dia Ref
03	—	—	03	—	.562-24 UNEF	.669 (17.0)	.270 (6.9)
08	08	8S	—	08	.500-20 UNF	.617 (15.7)	.270 (6.9)
10	10	10S, 10SL	—	10	.624-24 UNEF	.734 (18.6)	.375 (9.5)
12	12	12, 12S	07	12	.750-20 UNEF	.858 (21.8)	.511 (13.0)
14	14	14, 14S	12	14	.875-20 UNEF	.984 (25.0)	.585 (14.9)
16	16	16, 16S	19	16	1.000-20 UNEF	1.112 (28.2)	.710 (18.0)
18	18	18	27	18	1.062-18 UNEF	1.218 (30.9)	.789 (20.0)
20	20	20	37	20	1.188-18 UNEF	1.345 (34.2)	.914 (23.2)
22	22	22	—	22	1.312-18 UNEF	1.468 (37.3)	1.039 (26.4)
24	24	24	—	24	1.438-18 UNEF	1.593 (40.5)	1.154 (29.3)
28	—	28	—	—	1.750-18 UNS	1.969 (50.0)	1.389 (35.3)
32	—	32	—	—	2.000-18 UNS	2.219 (56.4)	1.635 (41.5)
36	—	36	—	—	2.250-16 UN	2.469 (62.7)	1.850 (47.0)
40	—	40	—	—	2.500-16 UN	2.719 (69.1)	2.065 (52.5)
44	—	44	—	—	3.000-16 UN	2.969 (75.4)	2.320 (58.9)
48	—	48	—	—	3.000-16 UN	3.219 (81.8)	2.570 (65.3)
61	—	—	61	—	1.500-18 UNEF	1.653 (42.0)	1.194 (30.3)

TABLE I: Dimensions for CONNECTOR DESIGNATOR F				
Connector Dash No.	NAS 1599 and MIL-DTL-83723 Series I and III	A Thread Class - 2B	D Dia Max	E Dia Ref
08	08	.438-28 UNEF	.860 (21.8)	.269 (6.8)
10	10	.562-24 UNEF	.980 (24.9)	.402 (10.2)
12	12	.688-24 UNEF	1.160 (29.5)	.516 (13.1)
14	14	.812-20 UNEF	1.280 (32.5)	.641 (16.3)
16	16	.938-20 UNEF	1.410 (35.8)	.766 (19.5)
18	18	1.062-18 UNEF	1.520 (38.6)	.863 (21.9)
20	20	1.188-18 UNEF	1.640 (41.7)	.988 (25.1)
22	22	1.312-18 UNEF	1.770 (45.0)	1.113 (28.3)
24	24	1.438-18 UNEF	1.890 (48.0)	1.238 (31.4)

TABLE I: Dimensions for CONNECTOR DESIGNATOR H				
Connector Dash No.	MIL-DTL-38999 Series III & IV	A Thread	D Dia Max	E Dia Ref
09	A / 09	M12 X 1.0 -6H	.860 (21.8)	.269 (6.8)
11	B / 11	M15 X 1.0 -6H	.980 (24.9)	.402 (10.2)
13	C / 13	M18 X 1.0 -6H	1.160 (29.5)	.516 (13.1)
15	D / 15	M22 X 1.0 -6H	1.280 (32.5)	.641 (16.3)
17	E / 17	M25 X 1.0 -6H	1.410 (35.8)	.766 (19.5)
19	F / 19	M28 X 1.0 -6H	1.520 (38.6)	.863 (21.9)
21	G / 21	M31 X 1.0 -6H	1.640 (41.7)	.988 (25.1)
23	H / 23	M34 X 1.0 -6H	1.770 (45.0)	1.113 (28.3)
25	J / 25	M37 X 1.0 -6H	1.890 (48.0)	1.238 (31.4)

TABLE II: Conduit Size Code and Fitting Dimensions			
Conduit Size Code	C Thread Class - 2A	L + .03 (0.76) - .00	K Dia Min
A	.438-28 UNEF	.210 (5.3)	.245 (6.2)
B	.688-24 UNEF	.250 (6.4)	.495 (12.6)
C	.938-20 UNEF	.310 (7.9)	.745 (18.9)
D	1.250-18 UNEF	.370 (9.4)	.995 (25.3)
E	1.563-18 UNEF	.370 (9.4)	1.245 (31.6)
F	1.875-16 UN	.430 (10.9)	1.495 (38.0)
G	2.375-16 UN	.430 (10.9)	1.995 (50.7)
H	2.875-16 UN	.430 (10.9)	2.495 (63.4)
J	.563-24 UNEF	.250 (6.4)	.370 (9.4)
K	.813-20 UNEF	.310 (7.9)	.620 (15.7)
L	3.375-16 UN	.430 (10.9)	2.995 (76.1)

© 2013 Glenair, Inc.

MIL-PRF-24758-36
45° Elbow for Connectors Listed in Table I

Basic Number	Connector Designator *A, F, or H* (Table I)		
M24758-36	C	A	16
	Conduit Size Code (Table II)		Connector Dash No. (Table I)

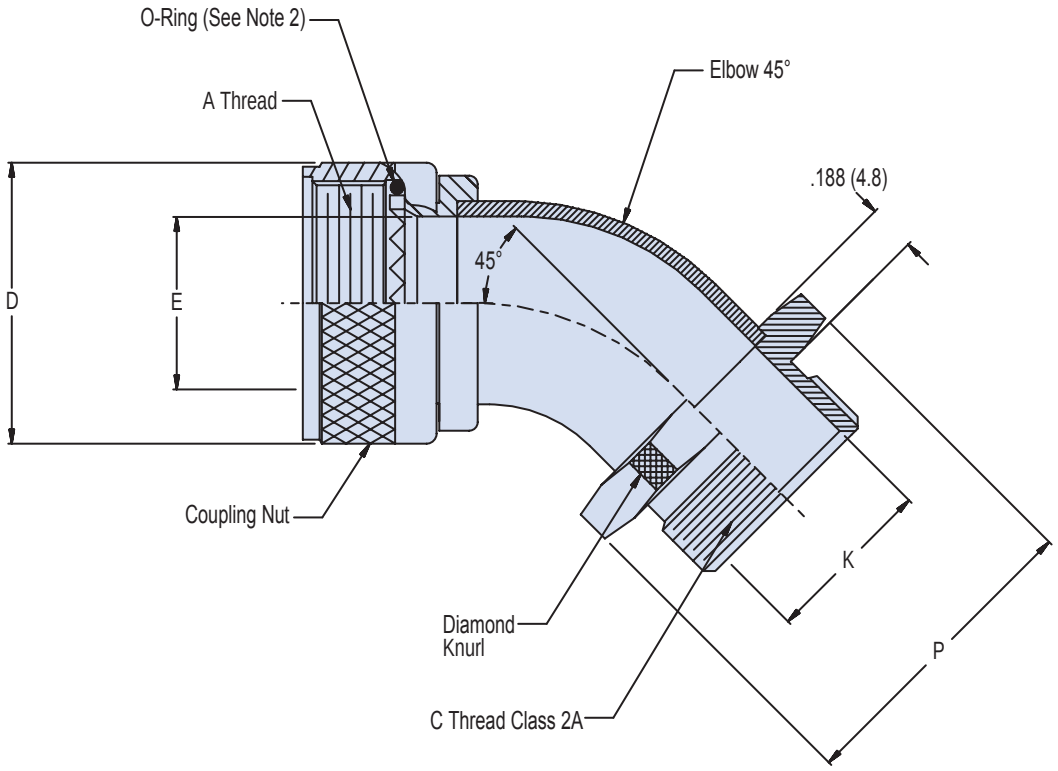

APPLICATION NOTES

1. Assembly identified with manufacurer's code identification number (Glenair, part number and classification code 490).
2. O-Ring not suppplied with connector designator A.
3. See Glenair Circular Connector Accessories catalog for recommended torque values, Group 2.
4. Material / Finish:
   Elbow, coupling nut - 316 SST/Electroless nickel, matte finish.
   O-Ring - Silicone rubber/NA
5. Metric dimensions (mm) are indicated in parentheses.

© 2013 Glenair, Inc.

GLENAIR, INC. • 1211 AIR WAY • GLENDALE, CA 91201-2497 • 818-247-6000 • FAX 818-500-9912
www.glenair.com
E-Mail: sales@glenair.com

MIL-PRF-24758-36
45° Elbow for Connectors Listed in Table I

Glenair®

TABLE I: Dimensions for CONNECTOR DESIGNATOR A (See Note 2)							
Connector Dash No.	NAS 1599 and MIL-DTL-83723 Series I and III	MIL-DTL-5015 (MS3400 Series)	AS81703 (Navy) Series III	MIL-DTL-26482 Series II	A Thread Class - 2B	D Dia Max	E Dia Ref
03	—	—	03	—	.562-24 UNEF	.669 (17.0)	.270 (6.9)
08	08	8S	—	08	.500-20 UNF	.617 (15.7)	.270 (6.9)
10	10	10S, 10SL	—	10	.624-24 UNEF	.734 (18.6)	.375 (9.5)
12	12	12, 12S	07	12	.750-20 UNEF	.858 (21.8)	.511 (13.0)
14	14	14, 14S	12	14	.875-20 UNEF	.984 (25.0)	.585 (14.9)
16	16	16, 16S	19	16	1.000-20 UNEF	1.112 (28.2)	.710 (18.0)
18	18	18	27	18	1.062-18 UNEF	1.218 (30.9)	.789 (20.0)
20	20	20	37	20	1.188-18 UNEF	1.345 (34.2)	.914 (23.2)
22	22	22	—	22	1.312-18 UNEF	1.468 (37.3)	1.039 (26.4)
24	24	24	—	24	1.438-18 UNEF	1.593 (40.5)	1.154 (29.3)
28	—	28	—	—	1.750-18 UNS	1.969 (50.0)	1.389 (35.3)
32	—	32	—	—	2.000-18 UNS	2.219 (56.4)	1.635 (41.5)
36	—	36	—	—	2.250-16 UN	2.469 (62.7)	1.850 (47.0)
40	—	40	—	—	2.500-16 UN	2.719 (69.1)	2.065 (52.5)
44	—	44	—	—	3.000-16 UN	2.969 (75.4)	2.320 (58.9)
48	—	48	—	—	3.000-16 UN	3.219 (81.8)	2.570 (65.3)
61	—	—	61	—	1.500-18 UNEF	1.653 (42.0)	1.194 (30.3)

TABLE I: Dimensions for CONNECTOR DESIGNATOR F				
Connector Dash No.	NAS 1599 and MIL-DTL-83723 Series I and III	A Thread Class - 2B	D Dia Max	E Dia Ref
08	08	.438-28 UNEF	.860 (21.8)	.269 (6.8)
10	10	.562-24 UNEF	.980 (24.9)	.402 (10.2)
12	12	.688-24 UNEF	1.160 (29.5)	.516 (13.1)
14	14	.812-20 UNEF	1.280 (32.5)	.641 (16.3)
16	16	.938-20 UNEF	1.410 (35.8)	.766 (19.5)
18	18	1.062-18 UNEF	1.520 (38.6)	.863 (21.9)
20	20	1.188-18 UNEF	1.640 (41.7)	.988 (25.1)
22	22	1.312-18 UNEF	1.770 (45.0)	1.113 (28.3)
24	24	1.438-18 UNEF	1.890 (48.0)	1.238 (31.4)

TABLE I: Dimensions for CONNECTOR DESIGNATOR H				
Connector Dash No.	MIL-DTL-38999 Series III & IV	A Thread	D Dia Max	E Dia Ref
09	A / 09	M12 X 1.0 -6H	.860 (21.8)	.269 (6.8)
11	B / 11	M15 X 1.0 -6H	.980 (24.9)	.402 (10.2)
13	C / 13	M18 X 1.0 -6H	1.160 (29.5)	.516 (13.1)
15	D / 15	M22 X 1.0 -6H	1.280 (32.5)	.641 (16.3)
17	E / 17	M25 X 1.0 -6H	1.410 (35.8)	.766 (19.5)
19	F / 19	M28 X 1.0 -6H	1.520 (38.6)	.863 (21.9)
21	G / 21	M31 X 1.0 -6H	1.640 (41.7)	.988 (25.1)
23	H / 23	M34 X 1.0 -6H	1.770 (45.0)	1.113 (28.3)
25	J / 25	M37 X 1.0 -6H	1.890 (48.0)	1.238 (31.4)

TABLE II: Conduit Size Code and Fitting Dimensions			
Conduit Size Code	C Thread Class - 2A	K Dia Min	P Max
A	.438-28 UNEF	.245 (6.2)	.880 (22.4)
B	.688-24 UNEF	.495 (12.6)	1.130 (28.7)
C	.938-20 UNEF	.745 (18.9)	1.380 (35.1)
D	1.250-18 UNEF	.995 (25.3)	1.690 (43.0)
E	1.563-18 UNEF	1.245 (31.6)	2.000 (50.8)
F	1.875-16 UN	1.495 (38.0)	2.310 (58.7)
G	2.375-16 UN	1.995 (50.7)	2.940 (74.7)
H	2.875-16 UN	2.495 (63.4)	3.440 (87.4)
J	.563-24 UNEF	.370 (9.4)	.940 (23.9)
K	.813-20 UNEF	.620 (15.7)	1.190 (30.2)
L	3.375-16 UN	2.995 (76.1)	3.940 (100.1)

© 2013 Glenair, Inc.

GLENAIR, INC. • 1211 AIR WAY • GLENDALE, CA 91201-2497 • 818-247-6000 • FAX 818-500-9912
www.glenair.com E-Mail: sales@glenair.com

MIL-PRF-24758-37
Adapter for VG94234 Reverse Bayonet Connector

Basic Number	Conduit Size Code (Table I)	Order Number (Table I)	Connector Code (Table III) Omit for Series ITS Connector
M24758-37	C	18	C

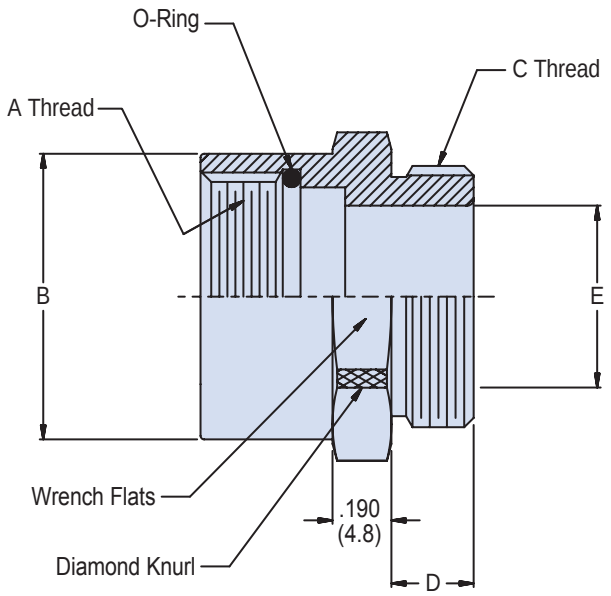

APPLICATION NOTES

1. Assembly identified with manufacurer's code identification number (Glenair, part number and classification code 490).
2. The M24758-37 adapter couples VG95234 connectors to M24758-2, M24758-3 or M24758-4 fittings.
3. See Glenair Circular Connector Accessories catalog for recommended torque values, Group 2.
4. Material / Finish:
   Elbow, coupling nut - 316L SST/Electroless nickel, matte finish.
   O-Ring - Silicone rubber/NA
5. Metric dimensions (mm) are indicated in parentheses.

© 2013 Glenair, Inc.

GLENAIR, INC. • 1211 AIR WAY • GLENDALE, CA 91201-2497 • 818-247-6000 • FAX 818-500-9912
www.glenair.com
E-Mail: sales@glenair.com

MIL-PRF-24758-37
Adapter for VG94234 Reverse Bayonet Connector

TABLE I: CONDUIT SIZE CODE

CONDUIT SIZE CODE	C THREAD	D +.03 (0.8) -.00	E MIN DIA
A	.438-28 UNEF	.210 (5.3)	.245 (6.2)
B	.688-24 UNEF	.250 (6.4)	.495 (12.6)
C	.938-20 UNEF	.310 (7.9)	.745 (18.9)
D	1.250-18 UNEF	.370 (9.4)	.995 (25.3)
E	1.563-18 UNEF	.370 (9.4)	1.245 (31.6)
F	1.875-16 UN	.430 (10.9)	1.495 (38.0)
G	2.375-16 UN	.430 (10.9)	1.995 (50.7)
H	2.875-16 UN	.430 (10.9)	2.495 (63.4)
J	.563-24 UNEF	.250 (6.4)	.370 (9.4)
K	.813-20 UNEF	.310 (7.9)	.620 (15.7)
L	3.375-16 UN	.430 (10.9)	2.995 (76.1)

TABLE II: ORDER NUMBER

ORDER NO.	SHELL SIZE VG95234	CONNECTOR DESIGNATOR	A THREAD CLASS 2B	B MAX
10	10SL	—,A,C,D,E	5/8-24 UNEF	.795 (20.2)
11	10SL	B	9/16-24 UNEF	.831 (21.1)
12	12S	B	5/8-24 UNEF	.890 (22.6)
14	14S	—,A,B,C,D,E	3/4-20 UNEF	1.012 (25.7)
16	16S	—,A,B,C,D,E	7/8-20 UNEF	1.209 (30.7)
17	16	—,A,B,C,D,E	7/8-20 UNEF	1.209 (30.7)
18	18	—,A,B,C,D,E	1-20 UNEF	1.332 (33.8)
20	20	—,A,B,C,D,E	1 1.8-18 UNEF	1.457 (37.0)
22	22	—,A,B,C,D,E	1 1/4-18 UNEF	1.583 (40.2)
24	24	—,A,B,C,D,E	1 3/8-18 UNEF	1.771 (45.0)
28	28	—,A,B,C,D,E	1 5/8-18 UNEF	1.929 (49.0)
32	32	—,A,B,C,D,E	1 7/8-16 UNEF	2.217 (56.3)
36	36	—,A,C,D,E	2 1/16-16 UNS	2.345 (59.6)
37	36	B	2 1/8-16 UNS	2.449 (62.2)
39	40	B	2 3/8-16 UNS	2.724 (69.2)
40	40	—,A,C,D,E	2 5/16-16 UNS	2.590 (65.8)

TABLE III: CONNECTOR CODE AND FITTING DIMENSIONS

Connector Code	Manufacturer and Series Description
—	Glenair ITS Series, VG95234
A	Amphenol, GT Series, VG95234
B	ITT Cannon, VG95234
C	Litton Veam, CIR Series, VG95234
D	Space Craft, VG95234
E	JTech, JTCIR, VG95234
F	AB Connectors, VG95234
G	Van-System, VG95234
H	R3 Connector Systems, VG95234

© 2013 Glenair, Inc.

MIL-PRF-24758-38
Straight MIL-S-24235 Stuffing Tube Adapter
to NPT Pipe Thread

Basic Number	Conduit Size Code *(Table I)*
M24758-38	C

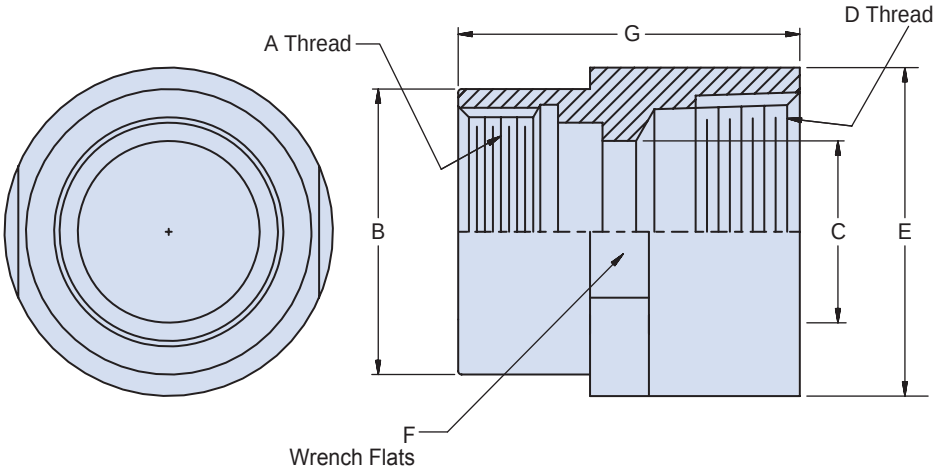

APPLICATION NOTES

1. Assembly identified with manufacurer's code identification number (Glenair, part number and classification code 490).
2. Material / Finish:
   Adapter - 316L SST/Electroless nickel, matte finish.
3. Metric dimensions (mm) are indicated in parentheses.

© 2013 Glenair, Inc.

GLENAIR, INC. • 1211 AIR WAY • GLENDALE, CA 91201-2497 • 818-247-6000 • FAX 818-500-9912
www.glenair.com
E-Mail: sales@glenair.com

TABLE I: CONDUIT SIZE CODE AND DIMENSIONS							
CONDUIT SIZE CODE	A THREAD CLASS 2B	B DIA	C DIA	D INTERNAL TAPER PIPE THREAD	E DIA	F WRENCH FLATS	G LENGTH
A	.875 - 12 UN	1.000 (25.40)	.406 (10.31)	3/4-14 NPT	1.190 (30.23)	1.000 (25.40)	2.750 (69.85)
B	1.000 - 12 UN	1.130 (28.70)	.515 (13.08)	3/4-14 NPT	1.250 (31.75)	1.125 (28.58)	1.125 (28.58)
C	1.125 - 12 UN	1.250 (31.75)	.640 (16.26)	1.0-11 1/2 NPT	1.440 (36.58)	1.250 (31.75)	3.000 (76.20)
D	1.250 - 12 UN	1.380 (35.05)	.750 (19.05)	1.0-11 1/2 NPT	1.500 (38.10)	1.375 (34.93)	3.000 (76.20)
E	1.250 - 12 UN	1.380 (35.05)	.812 (20.62)	1.0-11 1/2 NPT	1.500 (38.10)	1.375 (34.93)	3.130 (79.50)
F	1.312 - 12 UN	1.440 (36.58)	.843 (21.41)	1.0-11 1/2 NPT	1.630 (41.40)	1.500 (38.10)	3.130 (79.50)
G	1.500 - 12 UN	1.630 (41.40)	.953 (24.21)	1 1/4-11 1/2 NPT	1.750 (43.18)	1.625 (41.28)	3.250 (82.55)

© 2013 Glenair, Inc.

GLENAIR, INC. • 1211 AIR WAY • GLENDALE, CA 91201-2497 • 818-247-6000 • FAX 818-500-9912
www.glenair.com
E-Mail: sales@glenair.com

MIL-PRF-24758-39
45° Elbow • Conduit to Stuffing Tube

Basic Number	Stuffing Tube Size Code *(Table II)*	Conduit Size Code *(Table I)*
M24758-39	C	C

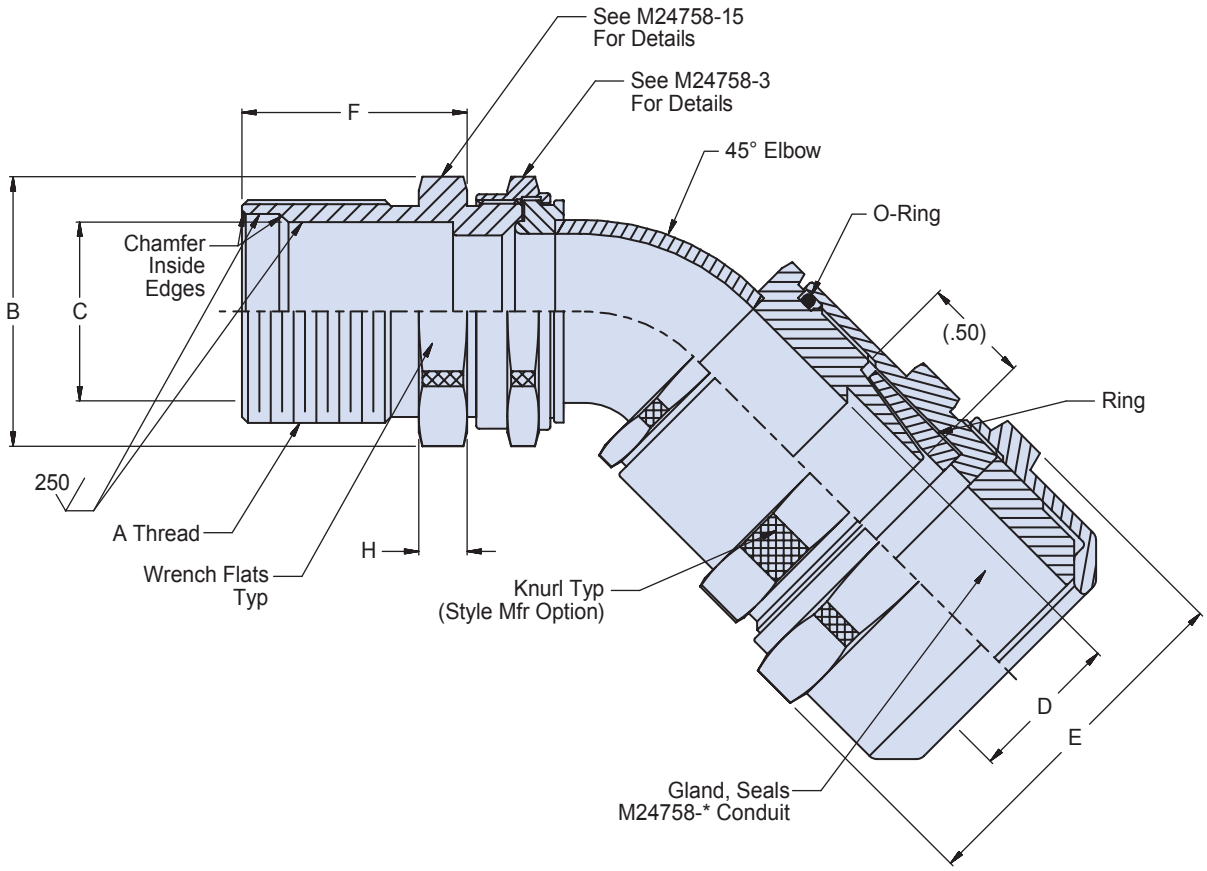

APPLICATION NOTES

1. Assembly identified with manufacurer's code identification number (Glenair, part number and classification code 490).
2. The M24758-39 adapter couples MIL-S-24235/9 through MIL-S-24235/17 stuffing tubes to M24758-* conduit.
3. See M24758-3 for recommended torque values.
4. Material / Finish:
   90° Elbow, adapters, nuts, sleeve and ring - 316L SST/Electroless nickel, matte finish.
   O-Ring - Silicone rubber/NA
5. Metric dimensions (mm) are indicated in parentheses.

© 2013 Glenair, Inc.

GLENAIR, INC. • 1211 AIR WAY • GLENDALE, CA 91201-2497 • 818-247-6000 • FAX 818-500-9912
www.glenair.com
E-Mail: sales@glenair.com

TABLE I: CONDUIT SIZE CODE

CONDUIT SIZE CODE	D MIN DIA	E MAX DIA
A	.245 (6.22)	1.18 (29.97)
B	.495 (12.57)	1.45 (36.83)
C	.745 (18.63)	1.79 (45.47)
D	.995 (25.73)	2.06 (52.32)
E	1.245 (31.63)	2.32 (58.93)
F	1.495 (37.97)	2.59 (65.79)
G	1.995 (50.63)	3.26 (82.80)
H	2.495 (63.37)	3.80 (96.52)
J	.370 (9.40)	1.32 (33.53)
K	.620 (15.75)	1.66 (42.16)
L	2.995 (76.03)	4.34 (110.24)

TABLE II: STUFFING TUBE SIZE, CONDUIT SIZE CODE AND DMENSIONS

STUFFING TUBE SIZE	CONDUIT SIZE CODE	A CLASS - 2A THREAD	B DIA MAX	C DIA	F ± .020 (0.51)	H ± .020 (0.51)
A	A, B, J	.875-12UN	1.375 (34.93)	.406 (10.31)	1.063 (27.00)	.188 (4.78)
B	B	1.000-12UN	1.500 (38.10)	.515 (13.08)	1.063 (27.00)	.188 (4.78)
C	B, C, K	1.250-12UN	1.625 (41.28)	.640 (16.26)	1.063 (27.00)	.188 (4.78)
D	C, K	1.250-12UN	1.750 (44.45)	.750 (19.05)	1.063 (27.00)	.188 (4.78)
E	D	1.313-12UN	2.750 (69.85)	.812 (20.62)	1.063 (27.00)	.188 (4.78)
F	D	1.625-12UN	2.812 (71.42)	.843 (21.41)	1.188 (30.18)	.188 (4.78)
G	E	1.750-12UN	2.000 (50.80)	.935 (23.75)	1.188 (30.18)	.188 (4.78)
J	E	1.813-12UN	2.125 (53.98)	1.062 (26.97)	1.188 (30.18)	.188 (4.78)
K	E	2.000-12UN	2.250 (57.15)	1.171 (29.74)	1.500 (38.10)	.188 (4.78)
L	E, F	2.063-12UN	2.312 (58.72)	1.265 (32.13)	1.500 (38.10)	.188 (4.78)
M	F	2.188-12UN	2.500 (63.50)	1.406 (35.71)	1.500 (38.10)	.250 (6.35)
N	G	2.313-12UN	2.625 (66.66)	1.515 (38.48)	1.563 (39.70)	.250 (6.35)
P	G	2.688-12UN	2.750 (69.85)	1.625 (41.28)	1.563 (39.70)	.250 (6.35)
R	G	2.875-12UN	2.875 (73.03)	1.750 (44.45)	1.563 (39.70)	.250 (6.35)
S	G	3.000-12UN	3.250 (82.55)	1.875 (47.63)	2.188 (55.58)	.313 (7.95)
T	G	2.875-12UN	3.500 (88.90)	2.062 (52.37)	2.188 (55.58)	.313 (7.95)
V	G, H	3.000-12UN	3.625 (92.08)	2.187 (55.55)	2.188 (55.58)	.313 (7.95)
W	H	3.125-12UN	3.750 (95.25)	2.312 (58.72)	2.188 (55.58)	.313 (7.95)
X	H	3.250-12UN	3.875 (98.43)	2.500 (63.50)	2.188 (55.58)	.313 (7.95)
Y	H	3.375-12UN	4.000 (101.60)	2.609 (66.27)	2.188 (55.58)	.313 (7.95)
Z	H	3.563-12UN	4.250 (107.95)	2.781 (70.64)	2.188 (55.58)	.313 (7.95)
AA	H	3.750-12UN	4.500 (114.30)	2.875 (73.03)	3.125 (79.38)	.438 (11.13)
BB	H, L	4.000-12UN	4.750 (120.65)	3.157 (80.19)	3.125 (79.38)	.438 (11.13)

© 2013 Glenair, Inc.

GLENAIR, INC. • 1211 AIR WAY • GLENDALE, CA 91201-2497 • 818-247-6000 • FAX 818-500-9912
www.glenair.com
E-Mail: sales@glenair.com

MIL-PRF-24758-40
90° Elbow • Conduit to Stuffing Tube

Basic Number	Stuffing Tube Size Code *(Table II)*	Conduit Size Code *(Table I)*
M24758-40	C	C

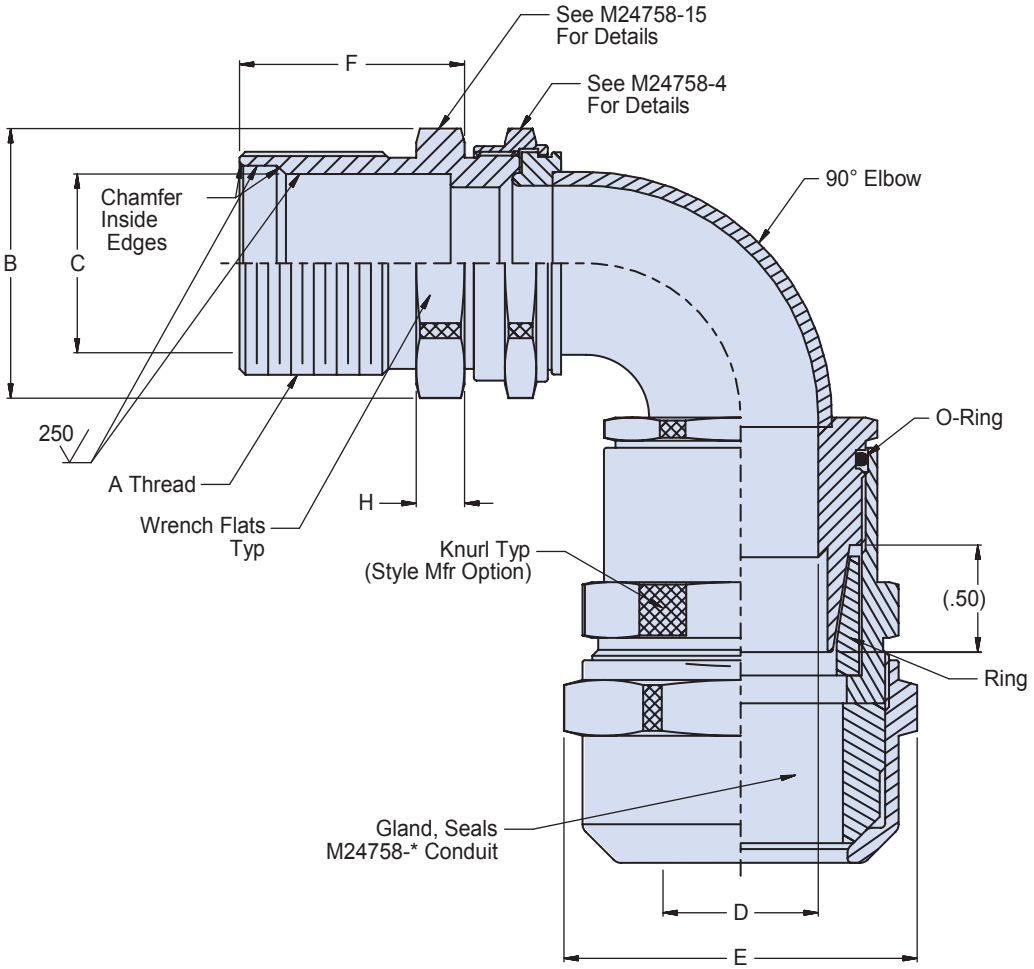

APPLICATION NOTES

1. Assembly identified with manufacurer's code identification number (Glenair, part number and classification code 490).
2. The M24758-40 adapter couples MIL-S-24235/9 through MIL-S-24235/17 stuffing tubes to M24758-* conduit.
3. See M24758-4 for recommended torque values.
4. Material / Finish:
   90° Elbow, adapters, nuts, sleeve and ring - 316L SST/Electroless nickel, matte finish.
   O-Ring - Silicone rubber/NA
5. Metric dimensions (mm) are indicated in parentheses.

© 2013 Glenair, Inc.

TABLE I: CONDUIT SIZE CODE		
CONDUIT SIZE CODE	D MIN DIA	E MAX DIA
A	.245 (6.22)	1.18 (29.97)
B	.495 (12.57)	1.45 (36.83)
C	.745 (18.63)	1.79 (45.47)
D	.995 (25.73)	2.06 (52.32)
E	1.245 (31.63)	2.32 (58.93)
F	1.495 (37.97)	2.59 (65.79)
G	1.995 (50.63)	3.26 (82.80)
H	2.495 (63.37)	3.80 (96.52)
J	.370 (9.40)	1.32 (33.53)
K	.620 (15.75)	1.66 (42.16)
L	2.995 (76.03)	4.34 (110.24)

TABLE II: STUFFING TIBE SIZE, CONDUIT SIZE CODE AND DIMENSIONS						
STUFFING TUBE SIZE	CONDUIT SIZE CODE	A CLASS - 2A THREAD	B DIA MAX	C DIA	F ± .020 (0.51)	H ± .020 (0.51)
A	A, B, J	.875-12UN	1.375 (34.93)	.406 (10.31)	1.063 (27.00)	.188 (4.78)
B	B	1.000-12UN	1.500 (38.10)	.515 (13.08)	1.063 (27.00)	.188 (4.78)
C	B, C, K	1.250-12UN	1.625 (41.28)	.640 (16.26)	1.063 (27.00)	.188 (4.78)
D	C, K	1.250-12UN	1.750 (44.45)	.750 (19.05)	1.063 (27.00)	.188 (4.78)
E	D	1.313-12UN	2.750 (69.85)	.812 (20.62)	1.063 (27.00)	.188 (4.78)
F	D	1.625-12UN	2.812 (71.42)	.843 (21.41)	1.188 (30.18)	.188 (4.78)
G	E	1.750-12UN	2.000 (50.80)	.935 (23.75)	1.188 (30.18)	.188 (4.78)
J	E	1.813-12UN	2.125 (53.98)	1.062 (26.97)	1.188 (30.18)	.188 (4.78)
K	E	2.000-12UN	2.250 (57.15)	1.171 (29.74)	1.500 (38.10)	.188 (4.78)
L	E, F	2.063-12UN	2.312 (58.72)	1.265 (32.13)	1.500 (38.10)	.188 (4.78)
M	F	2.188-12UN	2.500 (63.50)	1.406 (35.71)	1.500 (38.10)	.250 (6.35)
N	G	2.313-12UN	2.625 (66.66)	1.515 (38.48)	1.563 (39.70)	.250 (6.35)
P	G	2.688-12UN	2.750 (69.85)	1.625 (41.28)	1.563 (39.70)	.250 (6.35)
R	G	2.875-12UN	2.875 (73.03)	1.750 (44.45)	1.563 (39.70)	.250 (6.35)
S	G	3.000-12UN	3.250 (82.55)	1.875 (47.63)	2.188 (55.58)	.313 (7.95)
T	G	2.875-12UN	3.500 (88.90)	2.062 (52.37)	2.188 (55.58)	.313 (7.95)
V	G, H	3.000-12UN	3.625 (92.08)	2.187 (55.55)	2.188 (55.58)	.313 (7.95)
W	H	3.125-12UN	3.750 (95.25)	2.312 (58.72)	2.188 (55.58)	.313 (7.95)
X	H	3.250-12UN	3.875 (98.43)	2.500 (63.50)	2.188 (55.58)	.313 (7.95)
Y	H	3.375-12UN	4.000 (101.60)	2.609 (66.27)	2.188 (55.58)	.313 (7.95)
Z	H	3.563-12UN	4.250 (107.95)	2.781 (70.64)	2.188 (55.58)	.313 (7.95)
AA	H	3.750-12UN	4.500 (114.30)	2.875 (73.03)	3.125 (79.38)	.438 (11.13)
BB	H, L	4.000-12UN	4.750 (120.65)	3.157 (80.19)	3.125 (79.38)	.438 (11.13)

© 2013 Glenair, Inc.

GLENAIR, INC. • 1211 AIR WAY • GLENDALE, CA 91201-2497 • 818-247-6000 • FAX 818-500-9912
www.glenair.com
E-Mail: sales@glenair.com

MIL-PRF-24758-41
90°, 45° or Straight User Installable Connector Adapters for Glenair MIL-PRF-24758 Series Conduit

Basic Number	Connector Designator *A, F, H or L (Table I)*	Shell Size *(Table I)*	Angular Function	Conduit Size Code *(Table II)*
M24758-41	A	18	S	C

Angular Function
J = 90°
K = 45°
S = Straight

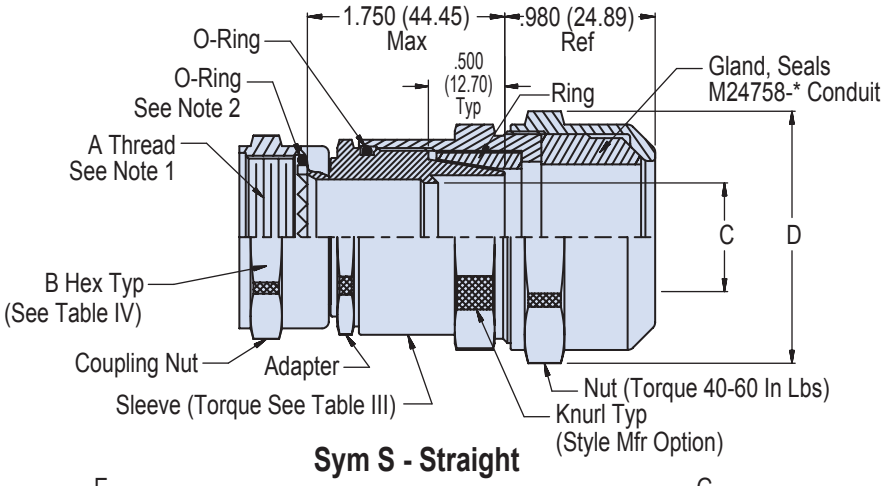

Sym S - Straight

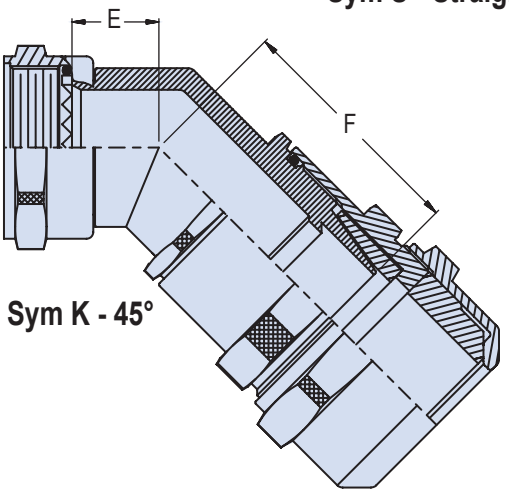

Sym K - 45°

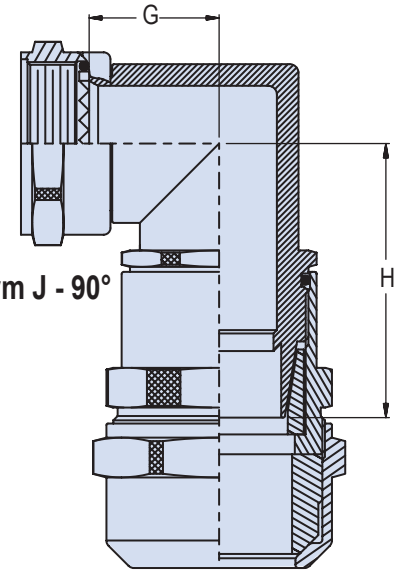

Sym J - 90°

© 2013 Glenair, Inc.

GLENAIR, INC. • 1211 AIR WAY • GLENDALE, CA 91201-2497 • 818-247-6000 • FAX 818-500-9912
www.glenair.com E-Mail: sales@glenair.com

MIL-PRF-24758-41
90°, 45° or Straight User Installable Connector Adapters
for Glenair MIL-PRF-24758 Series Conduit

Glenair®

TABLE I: SHELL SIZE AND DIMENSIONS

SHELL SIZE						MAX CONDUIT SIZE CODE (See Note 3)
A, F, L	H	E MAX	F MAX	G MAX	H MAX	
08	09	.740 (18.80)	1.660 (42.16)	.950 (24.13)	1.970 (50.04)	J .375 (9.53)
10/11	11	.760 (19.30)	1.700 (43.18)	1.020 (25.91)	2.070 (52.58)	B .500 (12.70)
12/13	13	.790 (20.07)	1.730 (43.94)	1.120 (28.45)	2.140 (54.36)	K .625 (15.88)
14/13	15	.830 (21.08)	1.780 (45.21)	1.190 (30.23)	2.210 (56.13)	C .750 (19.05)
16/17	17	.880 (22.35)	1.850 (46.99)	1.320 (33.53)	2.380 (60.45)	D 1.000 (25.40)
18/19	19	.880 (22.35)	1.850 (46.99)	1.320 (33.53)	2.380 (60.45)	D 1.000 (25.40)
20/21	21	1.070 (27.18)	1.910 (48.51)	1.520 (38.61)	2.520 (64.01)	E 1.250 (31.75)
22/23	23	1.070 (27.18)	1.910 (48.51)	1.520 (38.61)	2.520 (64.01)	E 1.250 (31.75)
24/25	25	1.160 (29.46)	2.010 (51.05)	1.660 (42.16)	2.730 (69.34)	F 1.500 (38.10)
28		1.160 (29.46)	2.010 (51.05)	1.660 (42.16)	2.730 (69.34)	F 1.500 (38.10)
32		1.260 (32.00)	2.110 (53.59)	1.990 (50.55)	3.090 (78.49)	G 2.000 (50.80)
36		1.260 (32.00)	2.110 (53.59)	1.990 (50.55)	3.090 (78.49)	G 2.000 (50.80)
40		1.310 (33.27)	2.180 (55.37)	2.260 (57.40)	3.210 (81.53)	H 2.500 (63.50)
44		1.310 (33.27)	2.180 (55.37)	2.260 (57.40)	3.210 (81.53)	H 2.500 (63.50)
48		1.420 (36.07)	2.290 (58.17)	2.570 (65.28)	3.420 (86.87)	L 3.000 (76.20)
61		1.070 (27.18)	1.910 (48.51)	1.520 (38.61)	2.520 (64.01)	E 1.250 (31.75)

TABLE IV

SHELL SIZE		
A, F, L	H	B HEX
08		.625 (15.88)
	09	.687 (17.45)
10/11		.750 (19.05)
	11	.812 (20.62)
12/13		.875 (22.23)
	13	.937 (23.80)
14/15		1.000 (25.40)
	15	1.062 (26.97)
16/17		1.125 (28.58)
	17	1.250 (31.75)
18/19		1.187 (30.15)
	19	1.375 (34.93)
20/21		1.312 (33.32)
	21	1.500 (38.10)
22/23		1.437 (36.50)
	23	1.625 (41.28)
24/25		1.562 (39.67)
	25	1.750 (44.45)
28		1.875 (47.63)
32		2.125 (53.98)
36		2.375 (60.33)
40		2.625 (66.68)
44		3.000 (76.20)
48		3.250 (82.55)
61		1.625 (41.28)

TABLE II

CONDUIT SIZE CODE	C I.D.	D MAX
A	.250 (6.350)	1.18 (29.97)
J	.375 (9.525)	1.32 (33.53)
B	.500 (12.70)	1.45 (36.83)
K	.625 (15.88)	1.66 (42.16)
C	.750 (19.05)	1.79 (45.47)
D	1.000 (25.40)	2.06 (52.32)
E	1.250 (31.75)	2.32 (58.93)
F	1.500 (38.10)	2.59 (65.79)
G	2.000 (50.80)	3.26 (82.80)
H	2.500 (63.50)	3.80 (96.52)
L	3.000 (76.20)	4.34 (110.24)

TABLE III RECOMMENDED SLEEVE TORQUE

CONDUIT SIZE CODE	± 5 INCH POUNDS
A	120
J	140
B	150
K	170
C	170
D	170
E	170
F	170
G	120
H	140
L	170

APPLICATION NOTES

1. See the Common Accessory Interface Data Table on page G-2 in this catalog.
2. O-Ring not supplied with connector designator A.
3. When maximum conduit size code is exceeded, dimensions E, F, G and H may be exceeded. Consult factory for dimensions.
4. Assembly identified with manufacurer's code identification number (Glenair, part number and classification code 490).
5. Glenair Series 600 Backshell Assembly Tools are recommended for assembly and installation.
6. Material / Finish:
   Coupling nuts, adapters, nuts, sleeves, elbows and rings - 316L SST/ Electroless nickel, matte finish.
   O-Ring and gland - Silicone rubber/NA
7. Metric dimensions (mm) are indicated in parentheses.

© 2013 Glenair, Inc.

GLENAIR, INC. • 1211 AIR WAY • GLENDALE, CA 91201-2497 • 818-247-6000 • FAX 818-500-9912
www.glenair.com
E-Mail: sales@glenair.com

MIL-PRF-24758-42
Straight Adapter for Metric Thread

Basic Number	Conduit Size Code *(Table I)*	A Thread Code *(Table II)*
M24758-42	C	16

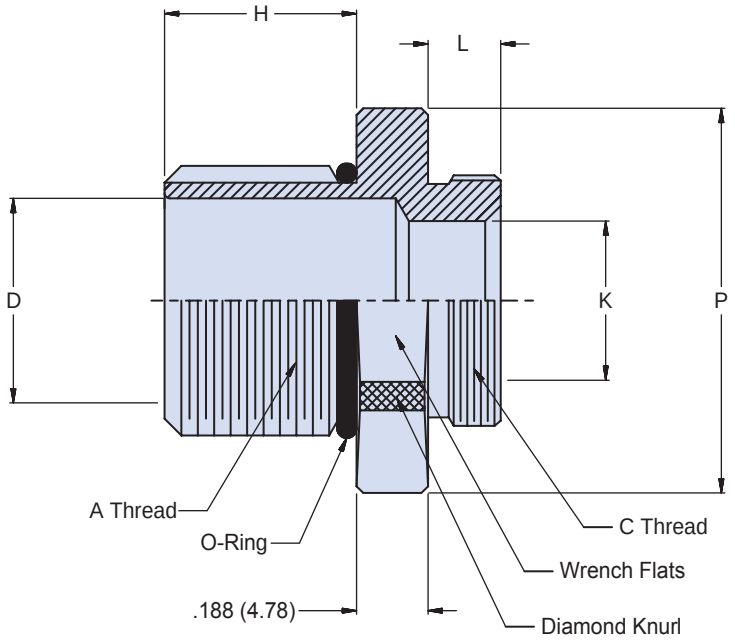

APPLICATION NOTES

1. Assembly identified with manufacurer's code identification number (Glenair, part number and classification code 490).
2. The M24758-42 adapter couples M25758-2, M24758-3 or M24758-4 series fittings.
3. Material / Finish:
   Adapter - 316L SST/Electroless nickel matte finish.
   O-Ring - Silicone rubber/NA
4. Metric dimensions (mm) are indicated in parentheses.

© 2013 Glenair, Inc.

GLENAIR, INC. • 1211 AIR WAY • GLENDALE, CA 91201-2497 • 818-247-6000 • FAX 818-500-9912
www.glenair.com
E-Mail: sales@glenair.com

TABLE I: CONDUIT SIZE CODE			
CONDUIT SIZE CODE	C CLASS 2A THREAD	L +.030 (0.76) - .000	K DIA MIN
A	.438-28 UNEF	.210 (5.33)	.245 (6.22)
B	.688-28 UNEF	.250 (6.35)	.495 (12.57)
C	.938-20 UNEF	.310 (7.87)	.745 (18.92)
D	1.250-18 UNEF	.370 (9.40)	.995 (24.88)
E	1.563-18 UNEF	.370 (9.40)	1.245 (31.62)
F	1.875-16 UNEF	.430 (10.92)	1.495 (37.97)
G	2.375-16 UNEF	.430 (10.92)	1.995 (50.67)
H	2.875-16 UNEF	.430 (10.92)	2.495 (63.37)
J	.563-24 UNEF	.250 (6.35)	.370 (9.40)
K	.813-20 UNEF	.310 (7.87)	.620 (15.75)
L	3.375-16 UNEF	.430 (10.92)	2.995 (76.07)

TABLE II: THREAD SIZE CODE AND DIMENSIONS					
THREAD SIZE CODE	A THREAD	D DIA	H DIM	P DIM MAX	CONDUIT SIZE
12	M12 X 1.5 6g	.281 (7.14)	.295 (7.49)	.880 (22.35)	.245 (6.22)
16	M16 X 1.5 6g	.438 (11.13)	.295 (7.49)	1.000 (25.40)	.245 (6.22)
20	M20 X 1.5 6g	.594 (15.09)	.295 (7.49)	1.250 (31.75)	.245 (6.22)
25	M25 X 1.5 6g	.781 (19.84)	.295 (7.49)	1.630 (41.40)	.245 (6.22)
32	M32 X 1.5 6g	1.000 (25.40)	.295 (7.49)	2.000 (50.80)	.245 (6.22)
40	M40 X 1.5 6g	1.375 (34.93)	.295 (7.49)	2.440 (61.98)	.245 (6.22)
50	M50 X 1.5 6g	1.750 (44.45)	.295 (7.49)	3.000 (76.20)	.245 (6.22)
63	M63 X 1.5 6g	2.250 (57.15)	.295 (7.49)	3.560 (90.42)	.245 (6.22)

© 2013 Glenair, Inc.

GLENAIR, INC. • 1211 AIR WAY • GLENDALE, CA 91201-2497 • 818-247-6000 • FAX 818-500-9912
www.glenair.com
E-Mail: sales@glenair.com

MIL-PRF-24758-43
Straight Adapter • Conduit to Panel Termination

Basic Number	Conduit Size Code *(Table I)*	A Thread Code *(Table II)*
M24758-43	C	16

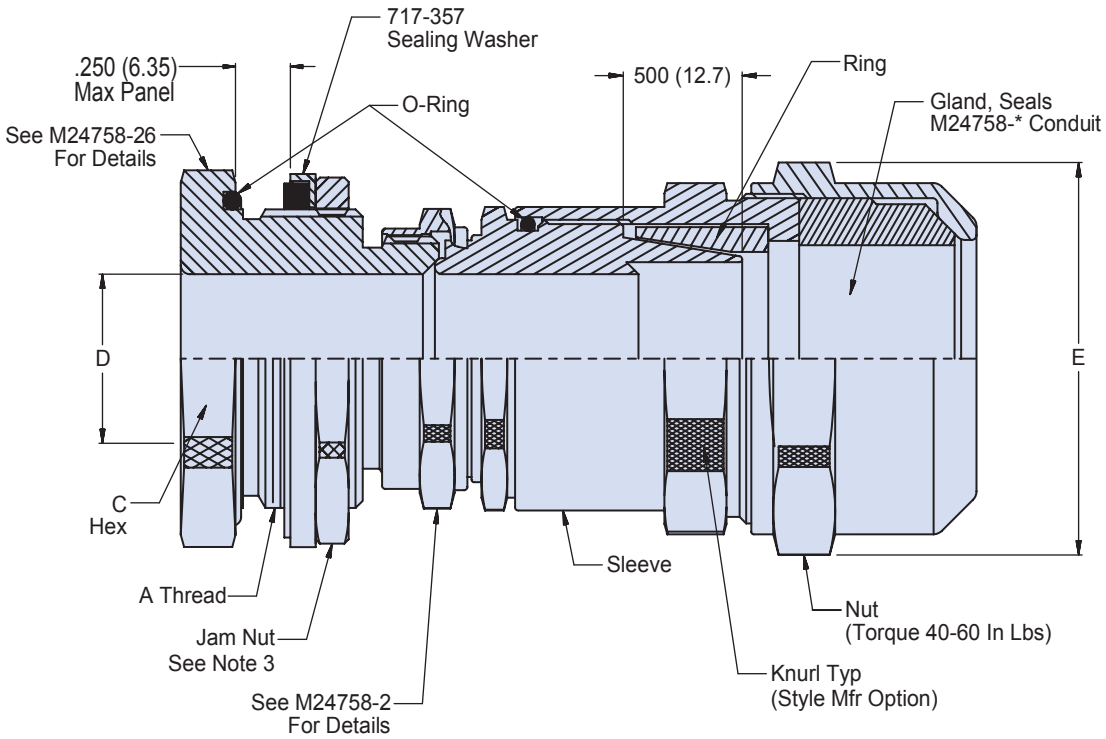

APPLICATION NOTES

1. Assembly identified with manufacurer's code identification number (Glenair, part number and classification code 490).
2. The function of the M24758-43 fitting is to terminate M24758-* flexible shielding conduit with a reusable adapter panel termination.
3. Use Glenair 600-176 jam nut wrench.
4. Material / Finish:
   Adapter, nuts, sleeve and ring - 316L SST/Electroless nickel matte finish.
   O-Ring and gland - Silicone rubber/NA
   Sealing washer - See individual drawing.
5. Metric dimensions (mm) are indicated in parentheses.

© 2013 Glenair, Inc. CAGE Code 06324 Printed in U.S.A.

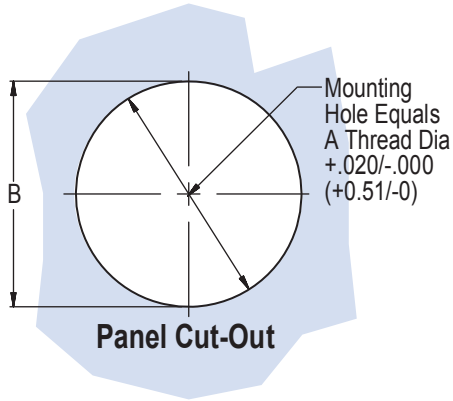

TABLE I: CONDUIT SIZE CODE

CONDUIT SIZE CODE	D MIN DIA	E MAX DIA
A	.245 (6.22)	1.18 (29.97)
B	.495 (12.57)	1.45 (36.83)
C	.745 (18.92)	1.79 (45.47)
D	.995 (24.88)	2.06 (52.32)
E	1.245 (31.62)	2.32 (58.93)
F	1.495 (37.97)	2.59 (65.79)
G	1.995 (50.67)	3.26 (82.80)
H	2.495 (63.37)	3.80 (96.52)
J	.370 (9.40)	1.32 (33.53)
K	.620 (15.75)	1.66 (42.16)
L	2.995 (76.07)	4.34 (110.24)

TABLE II

DASH NO	A CLASS - 2A THREAD	B +.03 (0.8) -.00	D FLATS	MAX SIZE CODE (TABLE I)		RECOMMENDED TORQUE VALUES INCH LBS (See Note 3)
20	5/8-24 UNEF	.630 (16.0)	.875 (22.2)	J	B	40 – 50
24	3/4-20 UNEF	.750 (19.1)	1.000 (25.4)	B	K	50 – 60
28	7/8-20 UNEF	.880 (22.4)	1.125 (28.6)	K	C	
32	1-20 UNEF	1.000 (25.4)	1.250 (31.8)	C	–	
36	1 1/8-18 UNEF	1.130 (28.7)	1.375 (34.9)	C	D	
40	1 1/4-18 UNEF	1.250 (31.8)	1.500 (38.1)	D	–	80 – 90
42	1 5/16-18 UNEF	1.310 (33.3)	1.625 (41.3)	D	–	
48	1 1/2-18 UNEF	1.500 (38.1)	1.750 (44.5)	D	E	
56	1 3/4-16 UN	1.750 (55.5)	2.000 (50.8)	E	F	
64	2-16 UN	2.000 (50.8)	2.500 (63.50)	F	–	100 – 110
80	2 1/2-16 UN	2.500 (63.50)	2.750 (69.85)	G	–	150 – 160
96	3-16 UN	3.000 (76.20)	3.000 (76.20)	H	–	
112	3 1/2-16 UN	3.500 (88.90)	3.750 (95.25)	L	–	
				Type 1	Type 2	

© 2013 Glenair, Inc.

GLENAIR, INC. • 1211 AIR WAY • GLENDALE, CA 91201-2497 • 818-247-6000 • FAX 818-500-9912
www.glenair.com
E-Mail: sales@glenair.com

MIL-PRF-24758-44
45° Elbow • Conduit To Panel Termination

Basic Number	Conduit Size Code *(Table I)*	Panel Fiting Thread Size Code *(Table II)*
M24758-44	C	28

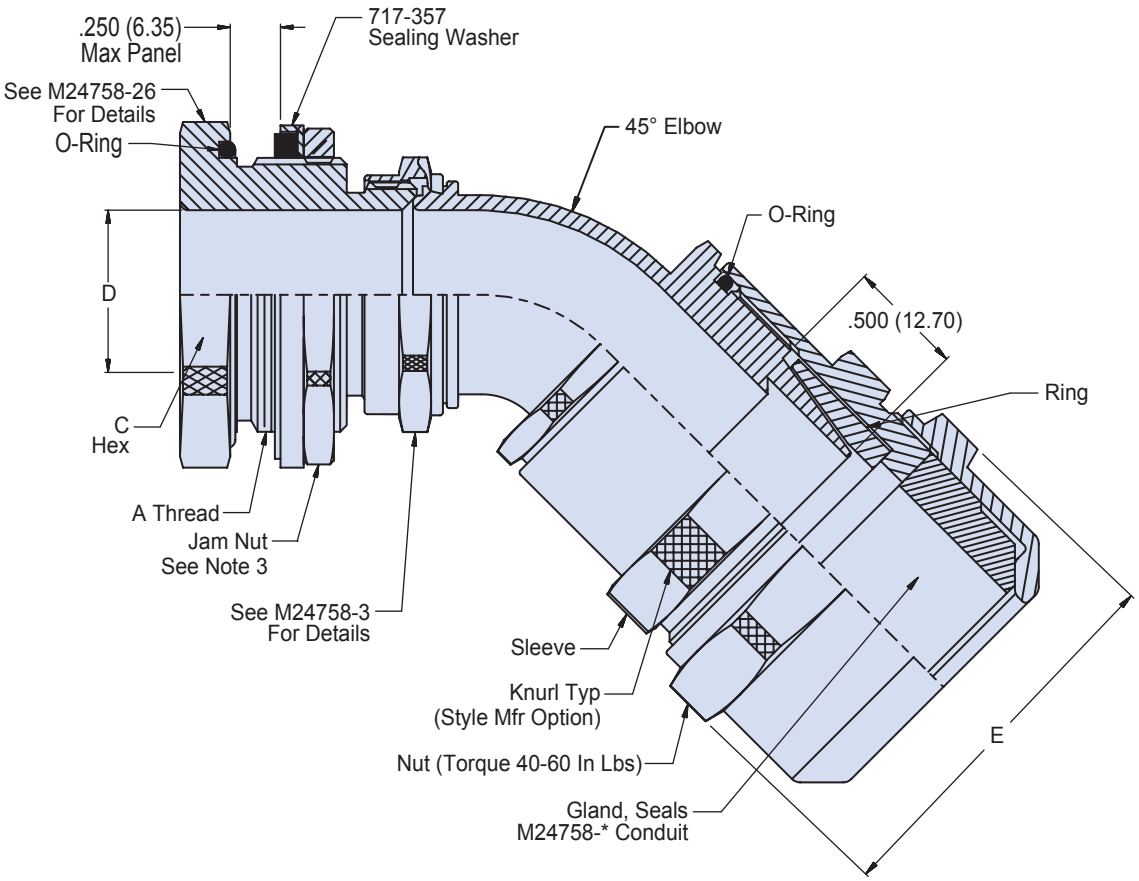

APPLICATION NOTES

1. Assembly identified with manufacurer's code identification number (Glenair, part number and classification code 490).
2. The function of the M24758-44 fitting is to terminate M24758-* flexible shielding conduit with a reusable adapter panel termination.
3. Use Glenair 600-176 jam nut wrench.
4. Material / Finish:
   Adapter, nuts, 45° elbow, sleeve and ring - 316L SST/Electroless nickel matte finish.
   O-Ring and gland - Silicone rubber/NA
   Sealing washer - See individual drawing.
5. Metric dimensions (mm) are indicated in parentheses.

© 2013 Glenair, Inc. CAGE Code 06324 Printed in U.S.A.

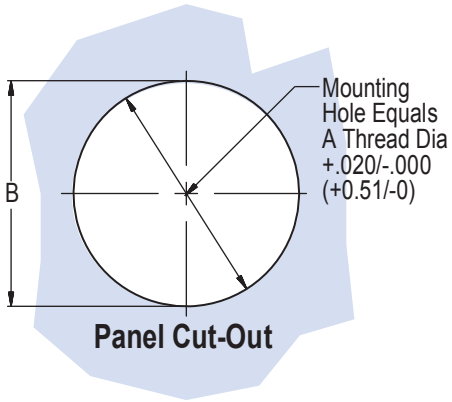

TABLE I: CONDUIT SIZE CODE

CONDUIT SIZE CODE	D MIN DIA	E MAX DIA
A	.245 (6.22)	1.18 (29.97)
B	.495 (12.57)	1.45 (36.83)
C	.745 (18.92)	1.79 (45.47)
D	.995 (24.88)	2.06 (52.32)
E	1.245 (31.62)	2.32 (58.93)
F	1.495 (37.97)	2.59 (65.79)
G	1.995 (50.67)	3.26 (82.80)
H	2.495 (63.37)	3.80 (96.52)
J	.370 (9.40)	1.32 (33.53)
K	.620 (15.75)	1.66 (42.16)
L	2.995 (76.07)	4.34 (110.24)

TABLE II

DASH NO	A CLASS - 2A THREAD	B +.03 (0.8) -.00	D FLATS	MAX SIZE CODE (TABLE I)		RECOMMENDED TORQUE VALUES INCH LBS (See Note 3)
				Type 1	Type 2	
20	5/8-24 UNEF	.630 (16.0)	.875 (22.2)	J	B	40 – 50
24	3/4-20 UNEF	.750 (19.1)	1.000 (25.4)	B	K	50 – 60
28	7/8-20 UNEF	.880 (22.4)	1.125 (28.6)	K	C	
32	1-20 UNEF	1.000 (25.4)	1.250 (31.8)	C	–	
36	1 1/8-18 UNEF	1.130 (28.7)	1.375 (34.9)	C	D	
40	1 1/4-18 UNEF	1.250 (31.8)	1.500 (38.1)	D	–	80 – 90
42	1 5/16-18 UNEF	1.310 (33.3)	1.625 (41.3)	D	–	
48	1 1/2-18 UNEF	1.500 (38.1)	1.750 (44.5)	D	E	
56	1 3/4-16 UN	1.750 (55.5)	2.000 (50.8)	E	F	
64	2-16 UN	2.000 (50.8)	2.500 (63.50)	F	–	100 – 110
80	2 1/2-16 UN	2.500 (63.50)	2.750 (69.85)	G	–	150 – 160
96	3-16 UN	3.000 (76.20)	3.000 (76.20)	H	–	
112	3 1/2-16 UN	3.500 (88.90)	3.750 (95.25)	L	–	

© 2013 Glenair, Inc.

MIL-PRF-24758-45
90° Elbow • Conduit To Panel Termination

Basic Number	Conduit Size Code *(Table I)*	Panel Fiting Thread Size Code *(Table II)*
M24758-45	C	28

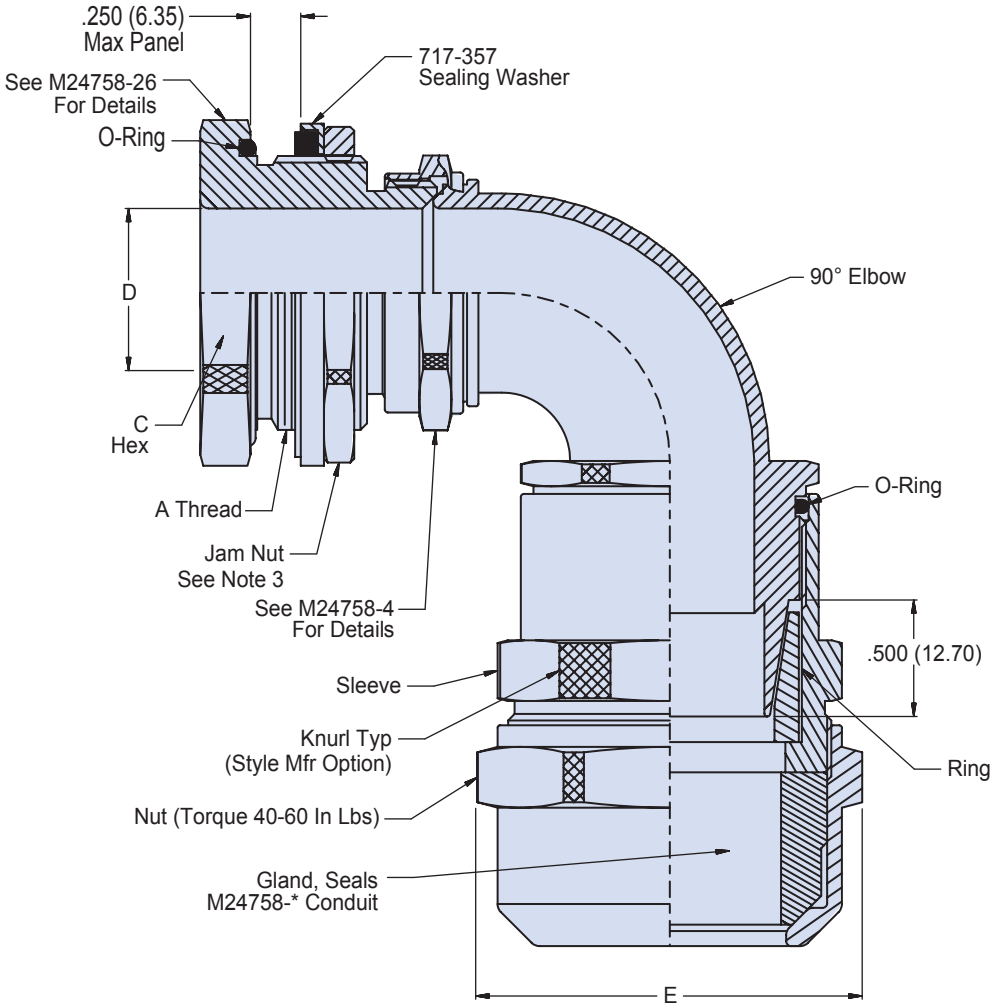

APPLICATION NOTES

1. Assembly identified with manufacurer's code identification number (Glenair, part number and classification code 490).
2. The function of the M24758-45 fitting is to terminate M24758-* flexible shielding conduit with a reusable adapter panel termination.
3. Use Glenair 600-176 jam nut wrench.
4. Material / Finish:
   90° Elbow, nuts, 90° elbow, sleeve and ring - 316L SST/ Electroless nickel, matte finish.
   O-Ring and gland - Silicone rubber/NA
   Sealing washer - See individual drawing.
5. Metric dimensions (mm) are indicated in parentheses.

© 2013 Glenair, Inc. CAGE Code 06324 Printed in U.S.A.

MIL-PRF-24758-45
90° Elbow • Conduit To Panel Termination

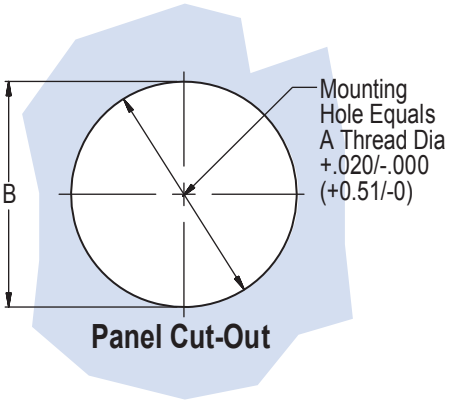

TABLE I: CONDUIT SIZE CODE

CONDUIT SIZE CODE	D MIN DIA	E MAX DIA
A	.245 (6.22)	1.18 (29.97)
B	.495 (12.57)	1.45 (36.83)
C	.745 (18.92)	1.79 (45.47)
D	.995 (24.88)	2.06 (52.32)
E	1.245 (31.62)	2.32 (58.93)
F	1.495 (37.97)	2.59 (65.79)
G	1.995 (50.67)	3.26 (82.80)
H	2.495 (63.37)	3.80 (96.52)
J	.370 (9.40)	1.32 (33.53)
K	.620 (15.75)	1.66 (42.16)
L	2.995 (76.07)	4.34 (110.24)

TABLE II

DASH NO	A CLASS - 2A THREAD	B +.03 (0.8) -.00	D FLATS	MAX SIZE CODE (TABLE I)		RECOMMENDED TORQUE VALUES INCH LBS (See Note 3)
20	5/8-24 UNEF	.630 (16.0)	.875 (22.2)	J	B	40 – 50
24	3/4-20 UNEF	.750 (19.1)	1.000 (25.4)	B	K	50 – 60
28	7/8-20 UNEF	.880 (22.4)	1.125 (28.6)	K	C	
32	1-20 UNEF	1.000 (25.4)	1.250 (31.8)	C	–	
36	1 1/8-18 UNEF	1.130 (28.7)	1.375 (34.9)	C	D	
40	1 1/4-18 UNEF	1.250 (31.8)	1.500 (38.1)	D	–	80 – 90
42	1 5/16-18 UNEF	1.310 (33.3)	1.625 (41.3)	D	–	
48	1 1/2-18 UNEF	1.500 (38.1)	1.750 (44.5)	D	E	
56	1 3/4-16 UN	1.750 (55.5)	2.000 (50.8)	E	F	
64	2-16 UN	2.000 (50.8)	2.500 (63.50)	F	–	100 – 110
80	2 1/2-16 UN	2.500 (63.50)	2.750 (69.85)	G	–	150 – 160
96	3-16 UN	3.000 (76.20)	3.000 (76.20)	H	–	
112	3 1/2-16 UN	3.500 (88.90)	3.750 (95.25)	L	–	
				Type 1	Type 2	

© 2013 Glenair, Inc.

GLENAIR, INC. • 1211 AIR WAY • GLENDALE, CA 91201-2497 • 818-247-6000 • FAX 818-500-9912
www.glenair.com
E-Mail: sales@glenair.com

MIL-PRF-24758-46
45° Elbow • Conduit to Tapered Pipe Thread

Basic Number	Conduit Size Code *(Table I)*	Dash Number *(Table II)*
M24758-46	C	04

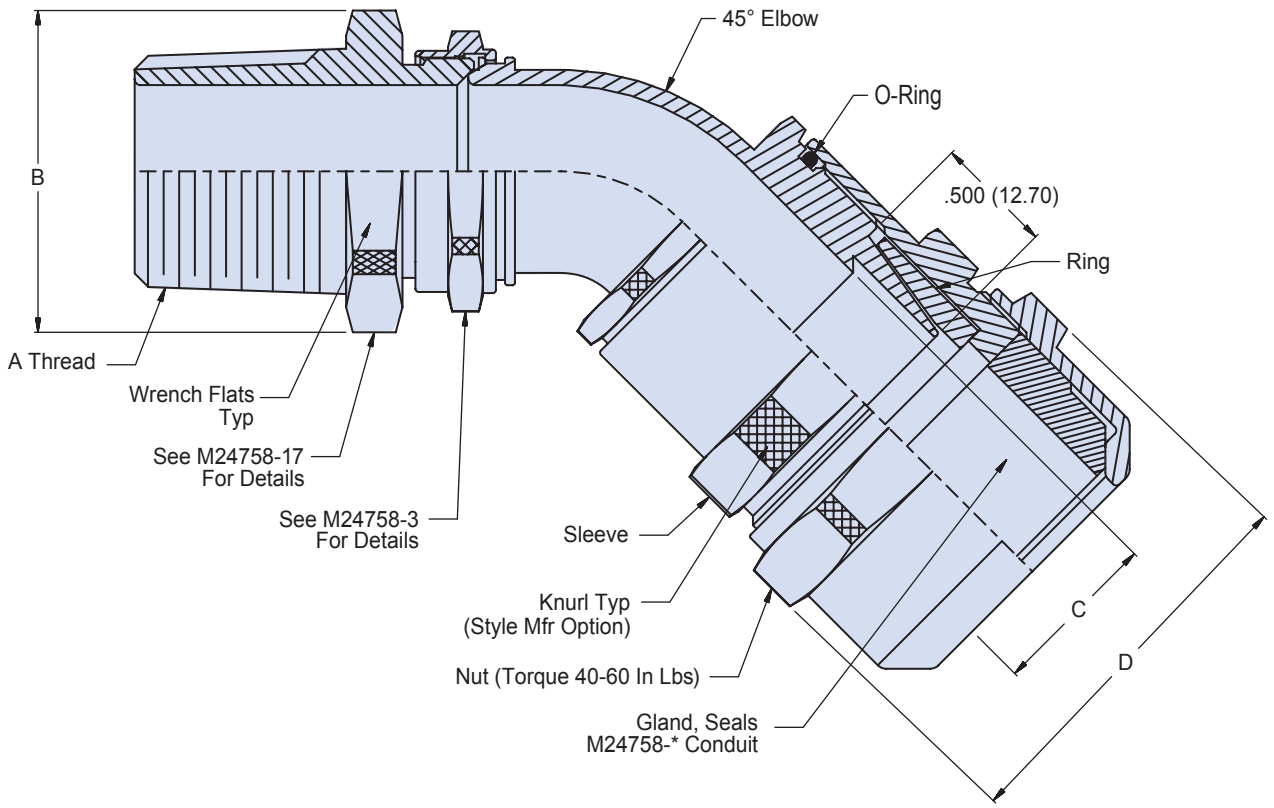

APPLICATION NOTES

1. Assembly identified with manufacurer's code identification number (Glenair, part number and classification code 490).
2. The function of the M24758-46 fitting is to terminate M24758-* flexible shielding conduit to a reusable fitting having an external tapered pipe thread.
3. Use Glenair 600-176 jam nut wrench.
4. Material / Finish:
   45° Elbow, nuts, 90° elbow, sleeve and ring - 316L SST/ Electroless nickel, matte finish.
   O-Ring and gland - Silicone rubber/NA
   Sealing washer - See individual drawing.
5. Metric dimensions (mm) are indicated in parentheses.

© 2013 Glenair, Inc. CAGE Code 06324 Printed in U.S.A.

TABLE I: CONDUIT SIZE CODE		
CONDUIT SIZE CODE	C MIN DIA	D MAX DIA
A	.245 (6.22)	1.18 (29.97)
B	.495 (12.57)	1.45 (36.83)
C	.745 (18.92)	1.79 (45.47)
D	.995 (24.88)	2.06 (52.32)
E	1.245 (31.62)	2.32 (58.93)
F	1.495 (37.97)	2.59 (65.79)
G	1.995 (50.67)	3.26 (82.80)
H	2.495 (63.37)	3.80 (96.52)
J	.370 (9.40)	1.32 (33.53)
K	.620 (15.75)	1.66 (42.16)
L	2.995 (76.07)	4.34 (110.24)

TABLE II: DASH NUMBER		
DASH NUMBER	A EXTERNAL TAPER PIPE THREAD	B MAX DIA
01	.250-18 NPT	1.000 (25.40)
02	.375-18 NPT	1.130 (28.70)
03	.500-14 NPT	1.250 (31.75)
04	.750-14 NPT	1.500 (38.10)
05	1.000-11.5 NPT	1.750 (44.45)
06	1.250-11.5 NPT	2.130 (54.10)
07	1.500-11.5 NPT	2.380 (60.45)
08	2.000-11.5 NPT	2.880 (73.15)
09	2.500-8 NPT	3.380 (85.85)
10	3.000-8 NPT	4.130 (104.90)

© 2013 Glenair, Inc.

GLENAIR, INC. • 1211 AIR WAY • GLENDALE, CA 91201-2497 • 818-247-6000 • FAX 818-500-9912
www.glenair.com
E-Mail: sales@glenair.com

MIL-PRF-24758-47
90° Elbow • Conduit to Tapered Pipe Thread

Basic Number	Conduit Size Code *(Table I)*	Dash Number *(Table II)*
M24758-47	C	04

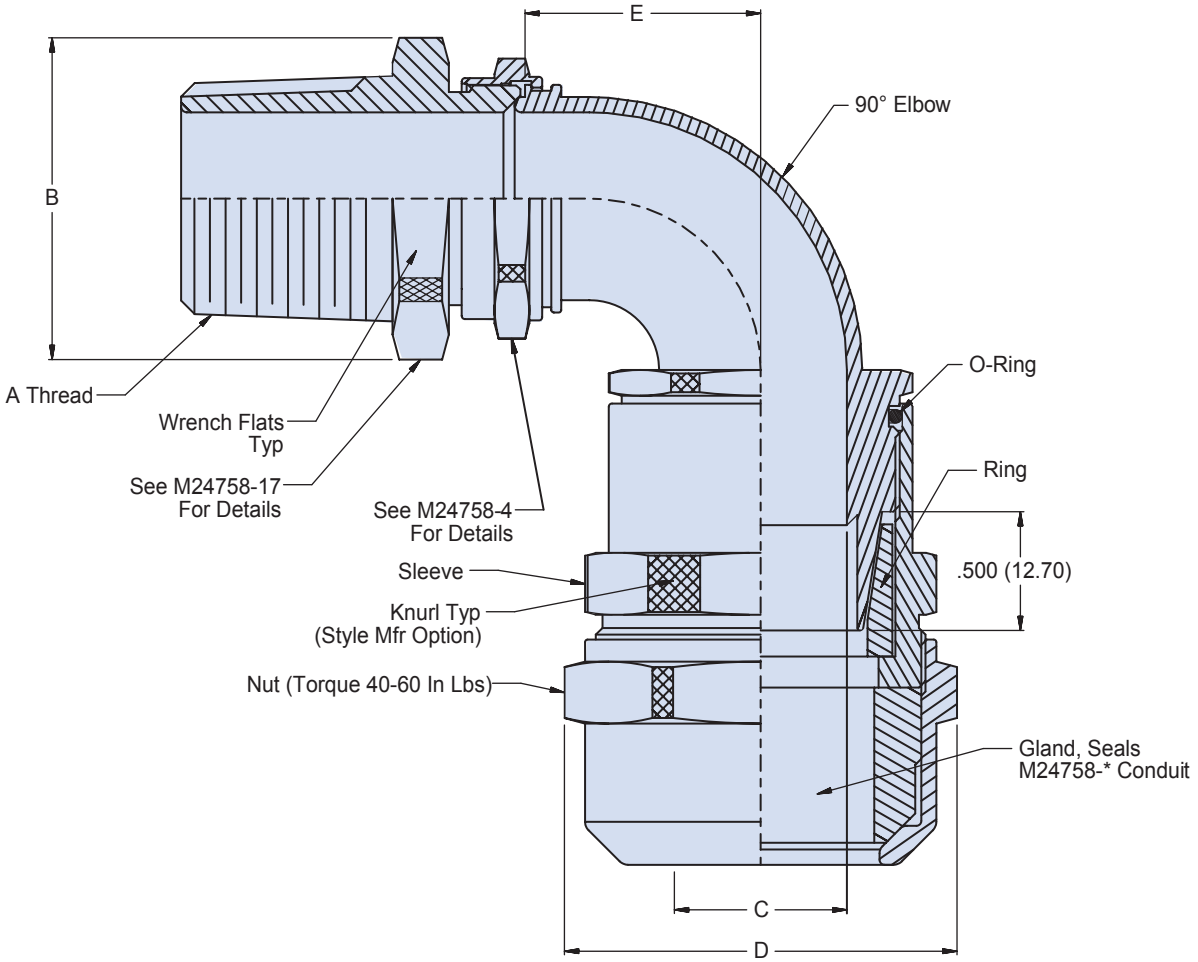

APPLICATION NOTES

1. Assembly identified with manufacurer's code identification number (Glenair, part number and classification code 490).
2. The function of the M24758-47 fitting is to terminate M24758-* flexible shielding conduit to a reusable fitting having an external tapered pipe thread.
3. Use Glenair 600-176 jam nut wrench.
4. Material / Finish:
   90° Elbow, nuts, 90° elbow, sleeve and ring - 316L SST/ Electroless nickel, matte finish.
   O-Ring and gland - Silicone rubber/NA
   Sealing washer - See individual drawing.
5. Metric dimensions (mm) are indicated in parentheses.

© 2013 Glenair, Inc. CAGE Code 06324 Printed in U.S.A.

TABLE I: CONDUIT SIZE CODE		
CONDUIT SIZE CODE	C MIN DIA	D MAX DIA
A	.245 (6.22)	1.18 (29.97)
B	.495 (12.57)	1.45 (36.83)
C	.745 (18.92)	1.79 (45.47)
D	.995 (24.88)	2.06 (52.32)
E	1.245 (31.62)	2.32 (58.93)
F	1.495 (37.97)	2.59 (65.79)
G	1.995 (50.67)	3.26 (82.80)
H	2.495 (63.37)	3.80 (96.52)
J	.370 (9.40)	1.32 (33.53)
K	.620 (15.75)	1.66 (42.16)
L	2.995 (76.07)	4.34 (110.24)

TABLE II: DASH NUMBER		
DASH NUMBER	A EXTERNAL TAPER PIPE THREAD	B MAX DIA
01	.250-18 NPT	1.000 (25.40)
02	.375-18 NPT	1.130 (28.70)
03	.500-14 NPT	1.250 (31.75)
04	.750-14 NPT	1.500 (38.10)
05	1.000-11.5 NPT	1.750 (44.45)
06	1.250-11.5 NPT	2.130 (54.10)
07	1.500-11.5 NPT	2.380 (60.45)
08	2.000-11.5 NPT	2.880 (73.15)
09	2.500-8 NPT	3.380 (85.85)
10	3.000-8 NPT	4.130 (104.90)

© 2013 Glenair, Inc.

GLENAIR, INC. • 1211 AIR WAY • GLENDALE, CA 91201-2497 • 818-247-6000 • FAX 818-500-9912
www.glenair.com
E-Mail: sales@glenair.com

MIL-PRF-24758-48
Mighty Mouse Connector Adapter
User Installable for Glenair MIL-PRF-25758 Conduit

Basic Number	Connector Designator	Shell Size	Angular Function	Conduit Size Code
M24758-48	M	14	S	C

Basic Number

Connector Designator
M = Mighty Mouse

Conduit Size Code
(Table II)

Shell Size
(Table I)

Angular Function
H = 45°
J = 90°
S = Straight

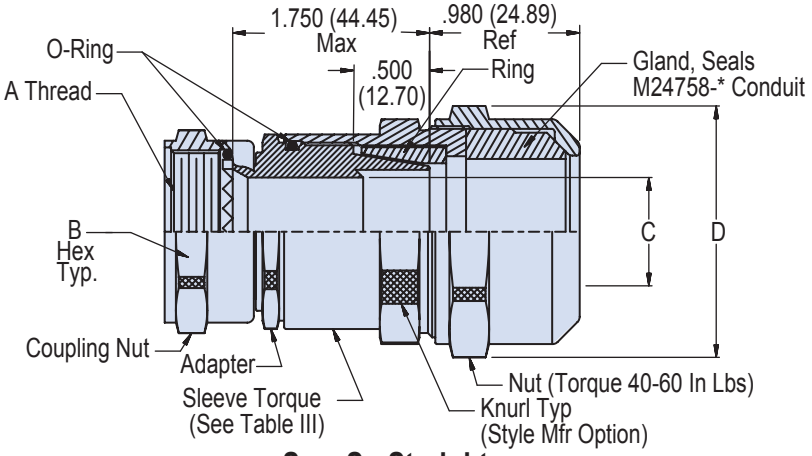

Sym S - Straight

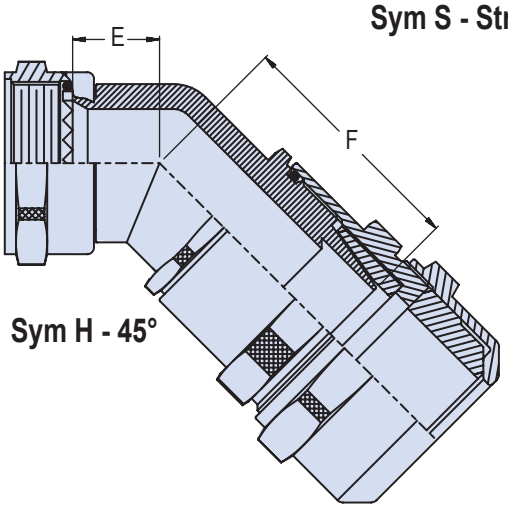

Sym H - 45°

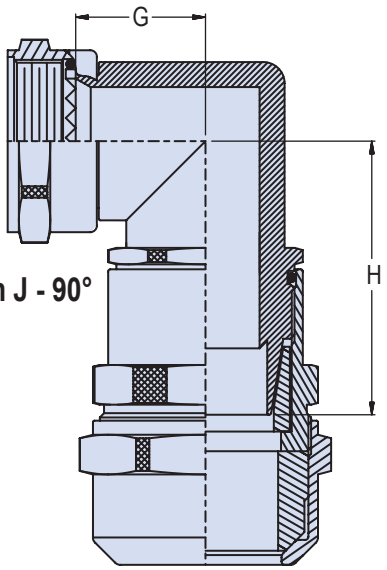

Sym J - 90°

© 2013 Glenair, Inc.

GLENAIR, INC. • 1211 AIR WAY • GLENDALE, CA 91201-2497 • 818-247-6000 • FAX 818-500-9912
www.glenair.com
E-Mail: sales@glenair.com

MIL-PRF-24758-48
Mighty Mouse Connector Adapter
User Installable for Glenair MIL-PRF-25758 Conduit

Glenair®

TABLE I: Order No., Shell Size, Thread, Dimensions and Max Conduit Size Code

Order No.	Shell Size Ref 800 / 801 803 / 804	Shell Size Ref 805	A Thread Class - 2B	B Hex	E Hex	F Max	G Max	H Max	Max Conduit Size Code See Note 3
05	05	N/A	1/4-32 UNEF	.437 (11.09)	.640 (16.26)	1.770 (44.96)	1.030 (26.16)	1.840 (46.74)	A
06	06	N/A	5/16-32 UNEF	.500 (12.70)	.640 (16.26)	1.800 (45.72)	1.030 (26.16)	1.880 (47.75)	A
11	N/A	08	3/8-32 UNEF	.562 (14.27)	.660 (16.76)	1.800 (45.72)	1.100 (27.94)	1.900 (48.26)	J
07	07	09	7/16-28 UNEF	.625 (15.88)	.660 (16.76)	1.850 (46.99)	1.100 (27.94)	1.950 (41.91)	J
08	08	10	1/2-28 UNEF	.687 (17.45)	.690 (17.53)	1.860 (47.24)	1.200 (30.48)	1.980 (50.29)	B
09	09	11	9/16-24 UNEF	.750 (19.05)	.690 (17.53)	1.890 (48.01)	1.200 (30.48)	2.020 (51.31)	B
10	10	12	5/8-24 UNEF	.812 (20.62)	.710 (18.03)	1.900 (48.26)	1.270 (32.26)	2.050 (52.07)	K
12	11/12 /13	N/A	11/16-24 UNEF	.875 (22.23)	.740 (18.80)	1.920 (48.77)	1.340 (34.04)	2.100 (53.34)	C
13	N/A	15	3/4-20 UNEF	1.000 (25.40)	.740 (18.80)	1.880 (47.75)	1.340 (34.04)	2.120 (53.85)	C
14	14/15 16/17	18/19	15/16-20 UNEF	1.125 (28.58)	.790 (20.07)	2.000 (50.80)	1.500 (38.10)	2.240 (56.90)	D
17	21	23	1 3/16-18 UNEF	1.375 (34.93)	.840 (21.34)	2.080 (52.83)	1.640 (41.66)	2.370 (60.20)	E

TABLE II: Conduit Size Code

Conduit Size Code	C I.D.	D Max
A	.250 (6.35)	1.18 (29.97)
J	.375 (9.53)	1.32 (33.53)
B	.500 (12.70)	1.45 (36.83)
K	.625 (15.88)	1.66 (42.16)
C	.750 (19.05)	1.79 (45.47)
D	1.000 (25.40)	2.06 (52.32)
E	1.250 (31.75)	2.32 (58.93)
F	1.500 (38.10)	2.59 (65.79)
G	2.000 (50.80)	3.26 (82.80)
H	2.500 (63.50)	3.80 (96.52)
L	3.000 (76.20)	4.34 (110.24)

TABLE III: Recommended Sleeve Torque

Conduit Size Code	± 5 Inch Pounds
A	120
J	140
B	150
K	170
C	170
D	170
E	170
F	170
G	120
H	140
L	170

APPLICATION NOTES

1. Assembly identified with manufacurer's name and part number, space permitting.
2. Glenair 600 Series Backshell Assembly Tools are recommended for assembly and installation.
3. When maximum Conduit Size Code is exceeded, dimensions E, F, G and H may be exceeded. Consult factory for dimensions.
4. Material / Finish:
   Coupling nuts, adapters, nuts, sleeves, elbows and rings - 316L SST/ Electroless nickel, matte finish.
   O-Ring and gland - Silicone rubber/NA
5. Metric dimensions (mm) are indicated in parentheses.

© 2013 Glenair, Inc.

GLENAIR, INC. • 1211 AIR WAY • GLENDALE, CA 91201-2497 • 818-247-6000 • FAX 818-500-9912
www.glenair.com E-Mail: sales@glenair.com

MIL-PRF-24758-49
User Installable Backshell
with Band Termination Porch to MIL-PRF-24758 Conduit

Basic Number	Conduit Size Code (Table I)	
M24758-49	C	B

B = Band 600-052, 600-090 or 600-092
C = Pre-Coiled Band 600-052-1, 600-090-1 or 600-092-1
Omit for None

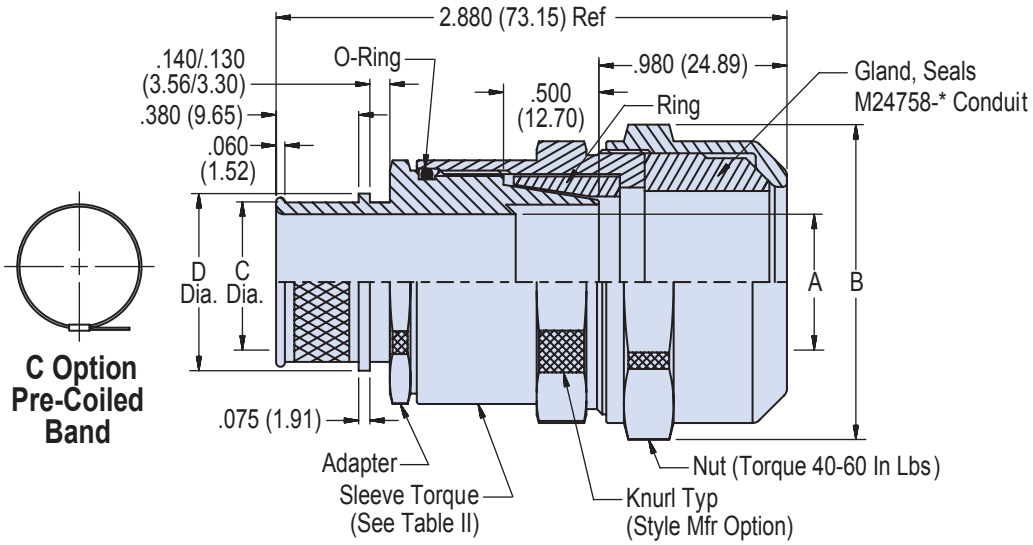

APPLICATION NOTES

1. Assembly identified with manufacurer's name, code I.D. number, part number and classification code 490, space permitting.
2. Glenair 600 Series Backshell Assembly Tools are recommended for assembly and installation.
3. Material / Finish:
   Coupling nuts, adapters, nuts, sleeves, elbows and rings - 316L SST/ Electroless nickel, matte finish.
   O-Ring and gland - Silicone rubber/NA
4. Metric dimensions (mm) are indicated in parentheses.

© 2013 Glenair, Inc.

GLENAIR, INC. • 1211 AIR WAY • GLENDALE, CA 91201-2497 • 818-247-6000 • FAX 818-500-9912
www.glenair.com
E-Mail: sales@glenair.com

TABLE I: CONDUIT SIZE CODE & DIMENSIONS				
Conduit Size Code	A I.D.	B MAX	C DIA	D DIA
A	.250 (6.35)	1.140 (28.96)	.375 (9.53)	.531 (13.49)
J	.375 (9.53)	1.340 (34.04)	.625 (15.88)	.750 (19.05)
B	.500 (12.70)	1.460 (37.08)	.875 (22.23)	1.000 (25.40)
K	.625 (15.88)	1.650 (41.91)	1.125 (28.58)	1.250 (31.75)
C	.750 (19.05)	1.780 (45.21)	1.375 (34.93)	1.500 (38.10)
D	1.000 (25.40)	2.030 (51.56)	1.625 (41.28)	1.750 (44.45)
E	1.250 (31.75)	2.280 (57.91)	2.125 (53.98)	2.250 (57.15)
F	1.500 (38.10)	2.530 (64.26)	2.625 (66.68)	2.750 (69.85)
G	2.000 (50.80)	3.140 (79.76)	.500 (12.70)	.625 (15.88)
H	2.500 (63.50)	3.650 (92.71)	.750 (19.05)	.875 (22.23)
L	3.000 (76.20)	4.150 (105.41	3.125 (79.38)	3.250 (82.55)

TABLE II: Recommended Sleeve Torque	
Conduit Size Code	± 5 Inch Pounds
A	120
J	140
B	150
K	170
C	170
D	170
E	170
F	170
G	120
H	140
L	170

© 2013 Glenair, Inc.

GLENAIR, INC. • 1211 AIR WAY • GLENDALE, CA 91201-2497 • 818-247-6000 • FAX 818-500-9912
www.glenair.com
E-Mail: sales@glenair.com

MIL-PRF-24758-50
Cable Shield Grounding Adapter

Basic Number	Dash Number *(Table I)*	A Thread Code *(Table II)*
M24758-50	B	B

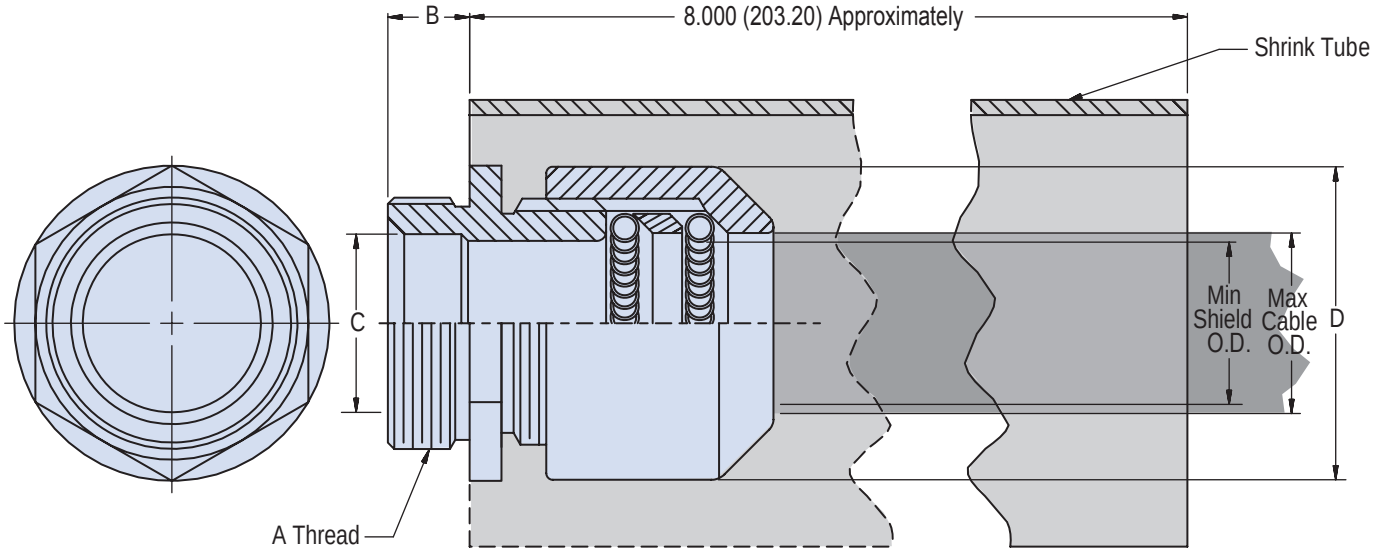

APPLICATION NOTES

1. Assembly identified with manufacurer's name, code I.D. number, part number and classification code 490, space permitting.
2. Glenair 600 Series Backshell Assembly Tools are recommended for assembly and installation.
3. Material / Finish:
   Adapter - 316L SST/Electroless nickel, matte finish.
   Ferrule, grounding spring - CRES/Passivate.
   Tubing - Heat shrinkable, flame retardant with adhesive.
4. Metric dimensions (mm) are indicated in parentheses.

© 2013 Glenair, Inc.

GLENAIR, INC. • 1211 AIR WAY • GLENDALE, CA 91201-2497 • 818-247-6000 • FAX 818-500-9912
www.glenair.com
E-Mail: sales@glenair.com

TABLE I: DASH NUMBER AND DIMENSIONS				
DASH NO.	MAX CABLE O.D.	MIN SHIELD O.D.	D MAX	SHRINK TUBE NO.
A	.250 (6.35)	.125 (3.18)	1.120 (28.45)	HRSR 125
B	.406 (10.31)	.200 (5.08)	1.120 (28.45)	
K	.515 (13.08)	.260 (6.60)	1.120 (28.45)	
C	.640 (16.26)	.400 (10.16)	1.320 (33.53)	HRSR 175
D	.750 (19.05)	.400 (10.16)	1.630 (41.40)	
E	.812 (20.62)	.430 (10.92)	1.630 (41.40)	
F	.843 (21.41)	.470 (11.94)	1.750 (44.45)	HRSR 200
G	.953 (24.21)	.580 (14.73)	1.880 (47.75)	
J	1.062 (26.55)	.690 (17.53)	1.880 (47.75)	
K	1.172 (29.77)	.800 (20.32)	2.060 (52.32)	HRSR 250
L	1.265 (32.13)	.890 (22.61)	2.180 (55.37)	
M	1.406 (35.71)	1.010 (25.65)	2.320 (58.93)	
N	1.515 (38.48)	1.130 (28.70)	2.380 (60.45)	
P	1.625 (41.28)	1.200 (30.48)	2.440 (61.98)	
R	1.750 (44.45)	1.250 (31.75)	2.750 (69.85)	HRSR 300
S	1.875 (47.63)	1.380 (35.05)	2.880 (73.15)	
T	2.062 (52.37)	1.560 (39.62)	3.130 (79.50)	HRSR 400
V	2.187 (55.55)	1.690 (42.93)	3.250 (82.55)	

TABLE II: THREAD CODE & DIMENSIONS			
A THREAD CODE	A THREAD CLASS - 2A	B +.030 (0.76) - .000	C DIA MIN
A	.438 - 28 UNEF	.210 (5.33)	.245 (6.22)
B	.688 - 24 UNEF	.250 (6.35)	.495 (12.57)
C	.938 - 20 UNEF	.310 (7.87)	.745 (18.92)
D	1.250 - 18 UNEF	.370 (9.40)	.995 (25.27)
E	1.563 - 18 UNEF	.370 (9.40)	1.245 (31.62)
F	1.875 - 16 UN	.430 (10.92)	1.495 (37.97)
G	2.375 - 16 UN	.430 (10.92)	1.995 (50.67)
H	2.875 - 16 UN	.430 (10.92)	1.495 (37.97)
J	.563 - 24 UNEF	.250 (6.35)	.370 (9.40)
K	.813 - 20 UNEF	.310 (7.87)	.620 (15.75)
L	3.375 - 16 UN	.430 (10.92)	2.995 (76.07)

© 2013 Glenair, Inc.

MIL-PRF-24758-51
Adapter for Tapered Pipe Thread

Basic Number	Conduit Size Code *(Table I)*	Dash Number *(Table II)*
M24758-51	C	04

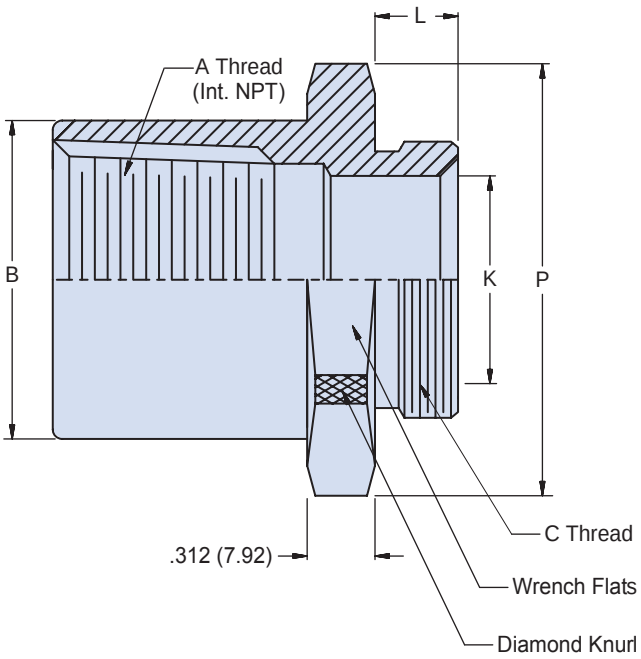

APPLICATION NOTES

1. Assembly identified with manufacurer's name, code I.D. number, part number and classification code 490, space permitting.
2. The M24758-51 adapter couples any fitting having a male tapered pipe thread to M24758-2, M24758-3 or m24758-4 fittings.
3. Material / Finish:
   Adapter - 316L SST/Electroless nickel, matte finish.
4. Metric dimensions (mm) are indicated in parentheses.

© 2013 Glenair, Inc.

GLENAIR, INC. • 1211 AIR WAY • GLENDALE, CA 91201-2497 • 818-247-6000 • FAX 818-500-9912
www.glenair.com
E-Mail: sales@glenair.com

TABLE I: CONDUIT SIZE CODE AND DIMENSIONS				
CONDUIT SIZE CODE	C THREAD CLASS 2A	L +.030 (0.76) - .000	K DIA MIN	MAX ENTRY DASH NUMBER
A	.438 - 28 UNEF	.210 (5.33)	.245 (6.22)	01
B	.688 - 24 UNEF	.250 (6.35)	.495 (12.57)	03
C	.938 - 20 UNEF	.310 (7.87)	.745 (18.92)	04
D	1.250 - 18 UNEF	.370 (9.40)	.995 (25.27)	05
E	1.563 - 18 UNEF	.370 (9.40)	1.245 (31.62)	06
F	1.875 - 16 UN	.430 (10.92)	1.495 (37.97)	07
G	2.375 - 16 UN	.430 (10.92)	1.995 (50.67)	08
H	2.875 - 16 UN	.430 (10.92)	1.495 (37.97)	09
J	.563 - 24 UNEF	.250 (6.35)	.370 (9.40)	02
K	.813 - 20 UNEF	.310 (7.87)	.620 (15.75)	03
L	3.375 - 16 UN	.430 (10.92)	2.995 (76.07)	10

TABLE II: DASH NUMBER & DIMENSIONS			
DASH NUMBER	A EXTERNAL TAPER PIPE THREAD	B DIA	P DIA MAX
01	.250-18 NPT	.625 (15.88)	.860 (21.84)
02	.375-18 NPT	.812 (20.62)	1.000 (25.40)
03	.500-14 NPT	1.000 (25.40)	1.250 (31.75)
04	.750-14 NPT	1.188 (30.18)	1.370 (34.80)
05	1.000-11.5 NPT	1.500 (38.10)	1.730 (43.94)
06	1.250-11.5 NPT	1.812 (46.02)	2.160 (54.86)
07	1.500-11.5 NPT	2.125 (53.98)	2.450 (62.23)
08	2.000-11.5 NPT	2.500 (63.50)	3.030 (76.96)
09	2.500-8 NPT	3.125 (79.38)	3.610 (91.69)
10	3.000-8 NPT	3.750 (95.25)	4.330 (109.98)

© 2013 Glenair, Inc.

GLENAIR, INC. • 1211 AIR WAY • GLENDALE, CA 91201-2497 • 818-247-6000 • FAX 818-500-9912
www.glenair.com
E-Mail: sales@glenair.com

MIL-PRF-24758-52
Adapter for MIL-C-22992 Connectors
User Installable for Glenair MIL-PRF-25758 Conduit

Basic Number	Connector Designator	Shell Size	Angular Function	Conduit Size Code
M24758-52	C	18	S	C
	C = MIL-C-22992 (Table I)	*(Table I)*	*H = 45°* *J = 90°* *S = Straight*	*(Table II)*

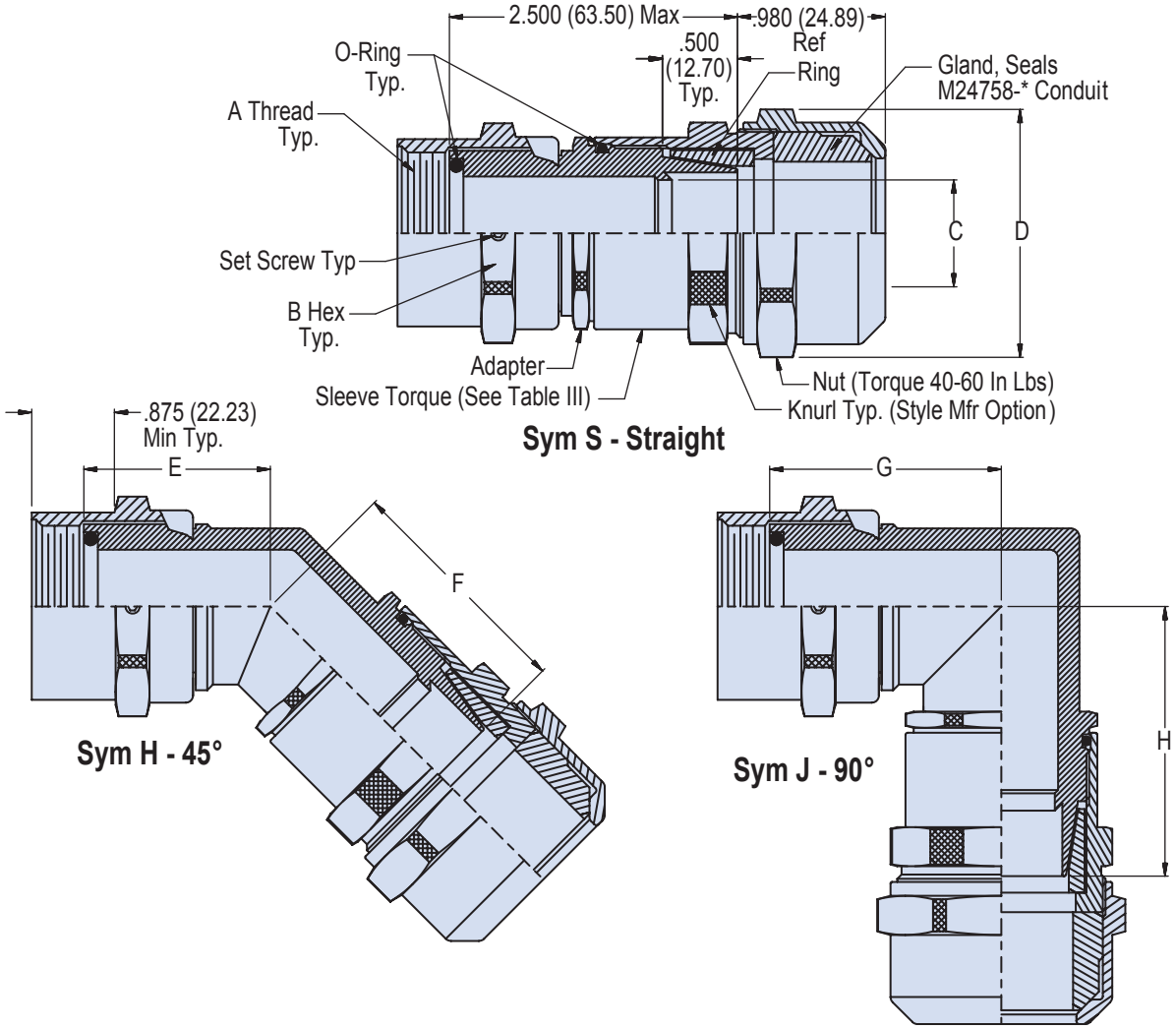

© 2013 Glenair, Inc.
CAGE Code 06324
Printed in U.S.A.

MIL-PRF-24758-52
Adapter for MIL-C-22992 Connectors
User Installable for Glenair MIL-PRF-25758 Conduit

Glenair®

TABLE I: SHELL SIZE, CONDUIT SIZE CODE AND FIOTTING DIMENSIONS

SHELL SIZE	A THREAD CLASS - 2B LEFT HAND	B HEX	E MAX	F MAX	G MAX	H MAX	MAX CONDUIT SIZE CODE (SEE NOTE 3)
12	3/4-20 UNEF	1.125 (28.58)	1.510 (38.35)	1.750 (44.45)	1.840 (46.74)	1.990 (50.55)	K
14	7/8-20 UNEF	1.250 (31.75)	1.550 (39.37)	1.770 (44.96)	1.910 (48.51)	2.060 (52.32)	C
16	1.000-20 UNEF	1.375 (34.93)	1.060 (26.92)	1.820 (46.23)	2.040 (51.82)	2.130 (54.10)	D
18	1 1/8-18 UNEF	1.500 (38.10)	1.600 (40.64)	1.820 (46.23)	2.040 (51.82)	2.210 (56.13)	D
20	1 1/4-18 UNEF	1.562 (14.27)	1.790 (45.47)	1.880 (47.75)	2.240 (56.90)	2.240 (56.90)	E
22	1 3/8-18 UNEF	1.687 (42.85)	1.790 (45.47)	1.880 (47.75)	2.240 (56.90)	2.310 (58.67)	E
24	1 5/8-18 UNEF	2.000 (50.80)	1.880 (47.75)	1.930 (49.02)	2.380 (60.45)	2.500 (63.50)	F
28	1 7/8-16 UN	2.250 (57.15)	1.980 (50.29)	2.030 (51.56)	2.710 (68.83)	2.790 (70.87)	G
32	2 1/16-16 UNS	2.437 (61.90)	1.980 (50.29)	2.030 (51.56)	2.710 (68.83)	2.790 (70.87)	G
36	2 5/16-16 UNS	2.687 (68.25)	1.980 (50.29)	2.030 (51.56)	2.710 (68.83)	3.040 (77.22)	G
40	2 5/8-16 UN	3.000 (76.20)	2.030 (51.56)	2.130 (54.10)	2.980 (75.69)	3.220 (81.79)	H
44	2 7/8-16 UN	3.250 (82.55)	2.140 (54.36)	2.240 (56.90)	3.290 (83.57)	3.370 28.58)	L

TABLE II: Conduit Size Code

CONDUIT SIZE CODE	C I.D.	D MAX
A	.250 (6.35)	1.18 (29.97)
J	.375 (9.53)	1.32 (33.53)
B	.500 (12.70)	1.45 (36.83)
K	.625 (15.88)	1.66 (42.16)
C	.750 (19.05)	1.79 (45.47)
D	1.000 (25.40)	2.06 (52.32)
E	1.250 (31.75)	2.32 (58.93)
F	1.500 (38.10)	2.59 (65.79)
G	2.000 (50.80)	3.26 (82.80)
H	2.500 (63.50)	3.80 (96.52)
L	3.000 (76.20)	4.34 (110.24)

TABLE III: Recommended Sleeve Torque

CONDUIT SIZE CODE	± 5 INCH POUNDS
A	120
B	140
C	150
D	170
E	170
F	170
G	170
H	170
J	120
K	140
L	170

APPLICATION NOTES

1. Assembly identified with manufacurer's name and part number and classification code 490, space permitting.
2. Glenair 600 Series Backshell Assembly Tools are recommended for assembly and installation.
3. When maximum Conduit Size Code is exceeded, dimensions E, F, G and H may be exceeded. Consult factory for dimensions.
4. Material / Finish:
   Coupling nuts, adapters, nuts, sleeves, elbows and rings - 316L SST/ Electroless nickel, matte finish.
   O-Rings and gland - Silicone rubber/NA
5. Metric dimensions (mm) are indicated in parentheses.

© 2013 Glenair, Inc.

GLENAIR, INC. • 1211 AIR WAY • GLENDALE, CA 91201-2497 • 818-247-6000 • FAX 818-500-9912
www.glenair.com E-Mail: sales@glenair.com

MIL-PRF-24758-53
Adapter for MIL-C-26482 Series I Connectors
User Installable for Glenair MIL-PRF-25758 Conduit

Basic Number	Connector Designator		Angular Function	
	D = MIL-C-26482, Series I (Table I)		*H = 45°* *J = 90°* *S = Straight*	
M24758-53	**D**	**17**	**S**	**C**
		Shell Size *(Table I)*		**Conduit Size Code** *(Table II)*

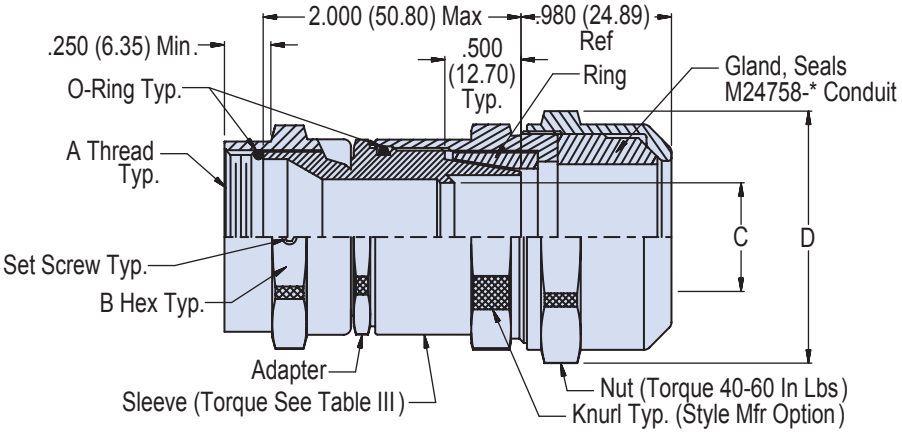

Sym S - Straight

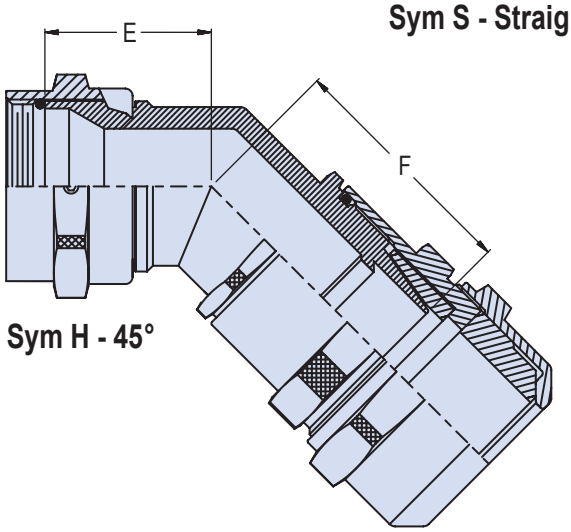

Sym H - 45°

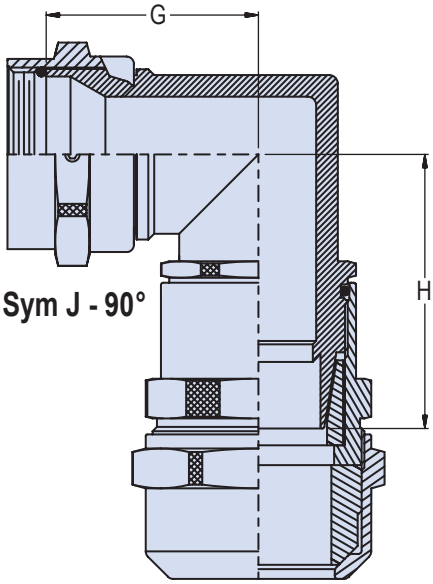

Sym J - 90°

© 2013 Glenair, Inc.

GLENAIR, INC. • 1211 AIR WAY • GLENDALE, CA 91201-2497 • 818-247-6000 • FAX 818-500-9912
www.glenair.com
E-Mail: sales@glenair.com

MIL-PRF-24758-53
Adapter for MIL-C-26482 Series I Connectors
User Installable for Glenair MIL-PRF-25758 Conduit

Glenair®

TABLE I: SHELL SIZE, CONDUIT SIZE CODE AND FITTING DIMENSIONS

SHELL SIZE	A THREAD CLASS - 2B	B HEX	E MAX	F MAX	G MAX	H MAX	MAX CONDUIT SIZE CODE (SEE NOTE 3)
08	7/16-28 UNEF	.625 (15.88)	.990 (25.15)	1.660 (42.16)	1.200 (30.48)	1.970 (50.04)	J
10	9/16-24 UNEF	.750 (19.05)	1.010 (25.65)	1.700 (43.18)	1.270 (32.26)	2.070 (52.58)	B
12	11/16-24 UNEF	.875 (22.23)	1.040 (26.42)	1.730 (43.94)	1.370 (34.80)	2.140 (54.36)	K
14	13/16-20 UNEF	1.000 (25.40)	1.080 (27.43)	1.780 (45.21)	1.440 (36.58)	2.210 (56.13)	C
16	15/16-20 UNEF	1.125 (28.58)	1.130 (28.70)	1.850 (46.99)	1.570 (39.88)	2.380 (60.45)	D
18	1 1/16-18 UNEF	1.187 (30.15)	1.130 (28.70)	1.850 (46.99)	1.570 (39.88)	2.380 (60.45)	D
20	1 3/16-18 UNEF	1.312 (33.32)	1.320 (33.53)	1.910 (48.51)	1.770 (44.96)	2.520 (64.01)	E
22	1 5/16-18 UNEF	1.437 (36.50)	1.320 (33.53)	1.910 (48.51)	1.770 (44.96)	2.520 (64.01)	E
24	1 7/16-18 UNEF	1.562 (39.67)	1.410 (35.81)	2.010 (51.04)	1.910 (48.51)	2.730 (69.34)	F

TABLE II: Conduit Size Code

CONDUIT SIZE CODE	C I.D.	D MAX
A	.250 (6.35)	1.18 (29.97)
J	.375 (9.53)	1.32 (33.53)
B	.500 (12.70)	1.45 (36.83)
K	.625 (15.88)	1.66 (42.16)
C	.750 (19.05)	1.79 (45.47)
D	1.000 (25.40)	2.06 (52.32)
E	1.250 (31.75)	2.32 (58.93)
F	1.500 (38.10)	2.59 (65.79)
G	2.000 (50.80)	3.26 (82.80)
H	2.500 (63.50)	3.80 (96.52)
L	3.000 (76.20)	4.34 (110.24)

TABLE III: Recommended Sleeve Torque

CONDUIT SIZE CODE	± 5 INCH POUNDS
A	120
B	140
C	150
D	170
E	170
F	170
G	170
H	170
J	120
K	140
L	170

APPLICATION NOTES

1. Assembly identified with manufacurer's name and part number and classification code 490, space permitting.
2. Glenair 600 Series Backshell Assembly Tools are recommended for assembly and installation.
3. When maximum Conduit Size Code is exceeded, dimensions E, F, G and H may be exceeded. Consult factory for dimensions.
4. Material / Finish:
   Coupling nuts, adapters, nuts, sleeves, elbows and rings - 316L SST/ Electroless nickel, matte finish.
   O-Rings and gland - Silicone rubber/NA
5. Metric dimensions (mm) are indicated in parentheses.

© 2013 Glenair, Inc.

GLENAIR, INC. • 1211 AIR WAY • GLENDALE, CA 91201-2497 • 818-247-6000 • FAX 818-500-9912
www.glenair.com E-Mail: sales@glenair.com

MIL-PRF-24758-54
Adapter for MIL-C-28840 Connectors
User Installable for Glenair MIL-PRF-25758 Conduit

Basic Number	Connector Designator		Angular Function	
	G = MIL-C-28840 (Table I)		*H = 45°* *J = 90°* *S = Straight*	
M24758-54	**G**	**17**	**S**	**C**
		Shell Size *(Table I)*		**Conduit Size Code** *(Table II)*

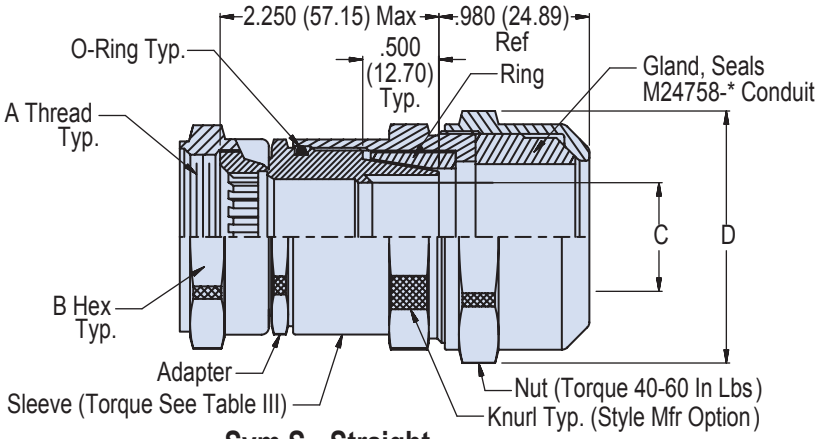

Sym S - Straight

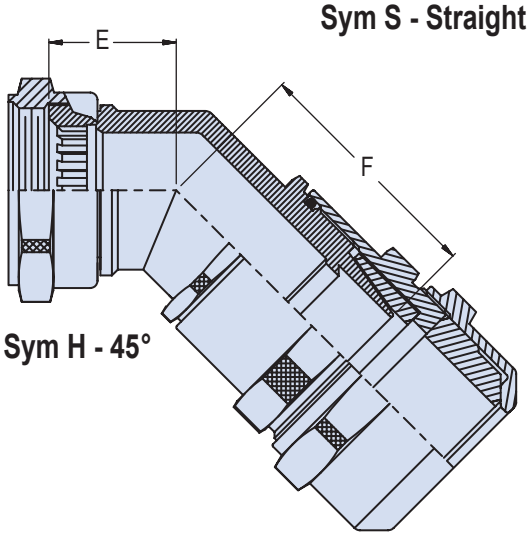

Sym H - 45°

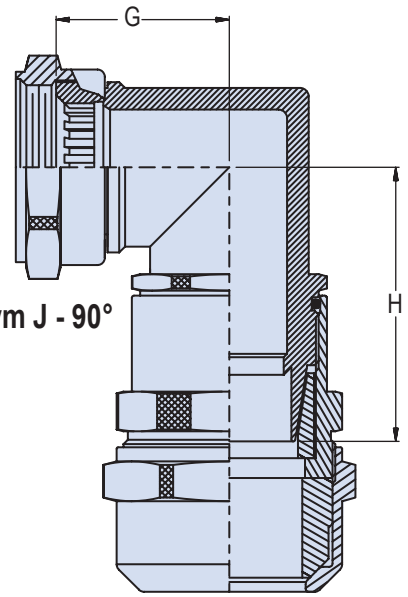

Sym J - 90°

© 2013 Glenair, Inc.

GLENAIR, INC. • 1211 AIR WAY • GLENDALE, CA 91201-2497 • 818-247-6000 • FAX 818-500-9912
www.glenair.com
E-Mail: sales@glenair.com

MIL-PRF-24758-54
Adapter for MIL-C-28840 Connectors
User Installable for Glenair MIL-PRF-25758 Conduit

Glenair®

TABLE I: SHELL SIZE, CONDUIT SIZE CODE AND FITTING DIMENSIONS

SHELL SIZE	A THREAD CLASS - 2B	B HEX	E MAX	F MAX	G MAX	H MAX	MAX CONDUIT SIZE CODE (SEE NOTE 3)
11	3/4-20 UNEF	.937 (23.80)	1.240 (31.50)	1.660 (42.16)	1.380 (35.05)	1.970 (50.04)	B
13	7/8-20 UNEF	1.062 (26.97)	1.260 (32.00)	1.700 (43.18)	1.440 (36.58)	2.070 (52.58)	K
15	1.000-20 UNEF	1.187 (30.15)	1.290 (32.77)	1.730 (43.94)	1.500 (38.10)	2.140 (54.36)	C
17	1 1/8-18 UNEF	1.375 (34.93)	1.310 (33.27)	1.780 (45.21)	1.570 (39.88)	2.210 (56.13)	D
19	1 1/4-18 UNEF	1.500 (38.10)	1.340 (34.04)	1.850 (46.99)	1.630 (41.40)	2.380 (60.45)	D
23	1 7/16-18 UNEF	1.687 (42.85)	1.380 (35.05)	1.850 (46.99)	1.730 (43.94)	2.380 (60.45)	E
25	1 9/16-18 UNEF	1.750 (44.45)	1.410 (35.81)	1.910 (48.51)	1.800 (45.72)	2.520 (64.01)	E
29	1 7/8-16 UN	2.125 (53.98)	1.580 (40.13)	1.910 (48.51)	2.040 (51.82)	2.520 (64.01)	F
33	1 1/16-16 UNS	2.250 (57.15)	1.620 (41.15)	2.010 (51.04)	2.130 (54.10)	2.730 (69.34)	G

TABLE II: Conduit Size Code

CONDUIT SIZE CODE	C I.D.	D MAX
A	.250 (6.35)	1.18 (29.97)
J	.375 (9.53)	1.32 (33.53)
B	.500 (12.70)	1.45 (36.83)
K	.625 (15.88)	1.66 (42.16)
C	.750 (19.05)	1.79 (45.47)
D	1.000 (25.40)	2.06 (52.32)
E	1.250 (31.75)	2.32 (58.93)
F	1.500 (38.10)	2.59 (65.79)
G	2.000 (50.80)	3.26 (82.80)
H	2.500 (63.50)	3.80 (96.52)
L	3.000 (76.20)	4.34 (110.24)

TABLE III: Recommended Sleeve Torque

CONDUIT SIZE CODE	± 5 INCH POUNDS
A	120
B	140
C	150
D	170
E	170
F	170
G	170
H	170
J	120
K	140
L	170

APPLICATION NOTES

1. Assembly identified with manufacurer's name and part number and classification code 490, space permitting.
2. Glenair 600 Series Backshell Assembly Tools are recommended for assembly and installation.
3. When maximum Conduit Size Code is exceeded, dimensions E, F, G and H may be exceeded. Consult factory for dimensions.
4. Material / Finish:
   Coupling nuts, adapters, nuts, sleeves, elbows and rings - 316L SST/ Electroless nickel, matte finish.
   O-Rings and gland - Silicone rubber/NA
5. Metric dimensions (mm) are indicated in parentheses.

© 2013 Glenair, Inc.

GLENAIR, INC. • 1211 AIR WAY • GLENDALE, CA 91201-2497 • 818-247-6000 • FAX 818-500-9912
www.glenair.com
E-Mail: sales@glenair.com

MIL-PRF-24758-55
Straight, 90° or 45°Adapter
for Tapered Pipe Thread

Basic Number	Angular Function	Dash Number *(Table I)*
M24758-55	B	04

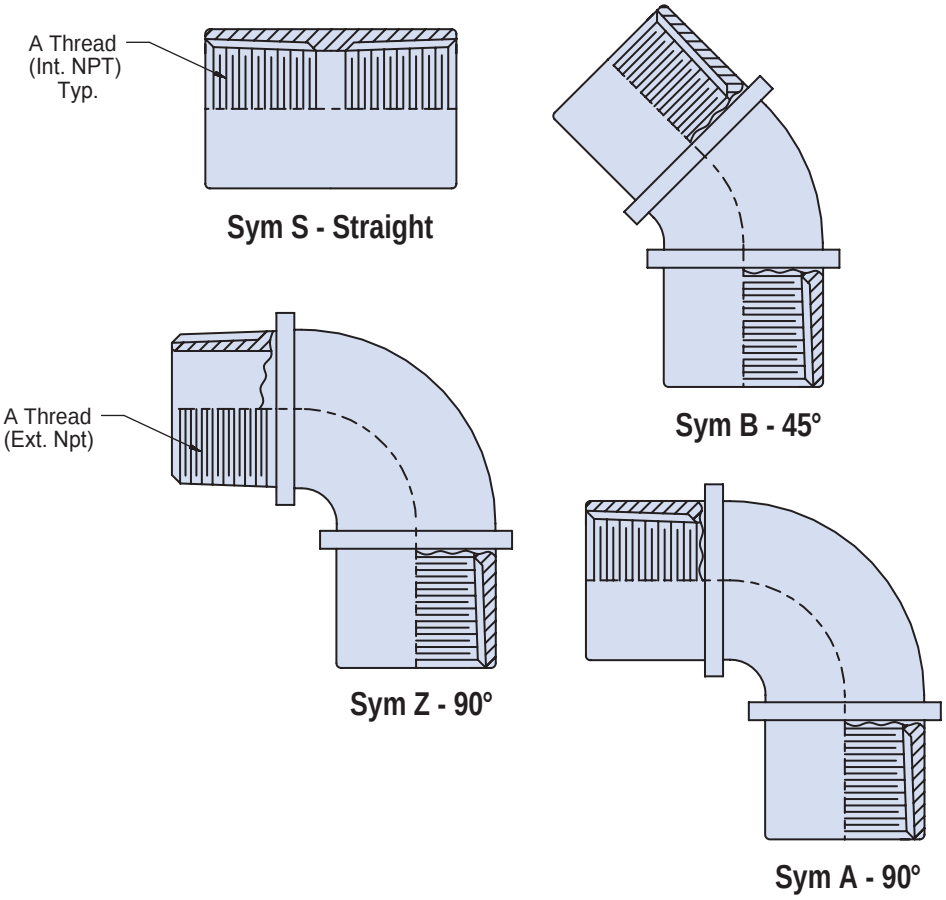

© 2013 Glenair, Inc.

TABLE I: DASH NO.	
DASH NUMBER	A EXTERNAL TAPER PIPE THREAD
01	.250-18 NPT
02	.375-18 NPT
03	.500-14 NPT
04	.750-14 NPT
05	1.000-11.5 NPT
06	1.250-11.5 NPT
07	1.500-11.5 NPT
08	2.000-11.5 NPT
09	2.500-8 NPT
10	3.000-8 NPT

APPLICATION NOTES

1. Assembly identified with manufacurer's code identification number (Glenair, part number and classification code 490).
2. Material / Finish:
   Adapter - 316L SST/Electroless nickel, matte finish.
3. Metric dimensions (mm) are indicated in parentheses.

© 2013 Glenair, Inc.

GLENAIR, INC. • 1211 AIR WAY • GLENDALE, CA 91201-2497 • 818-247-6000 • FAX 818-500-9912
www.glenair.com E-Mail: sales@glenair.com

MIL-PRF-24758-56
90° Adapter for MIL-C-26482 Series I Connectors
EMI/RFI to Glenair MIL-PRF-25758-* Conduit

Basic Number	Conduit Size Code *(Table I)*	Shell Size *(Table II)*
M24758-56	D	20

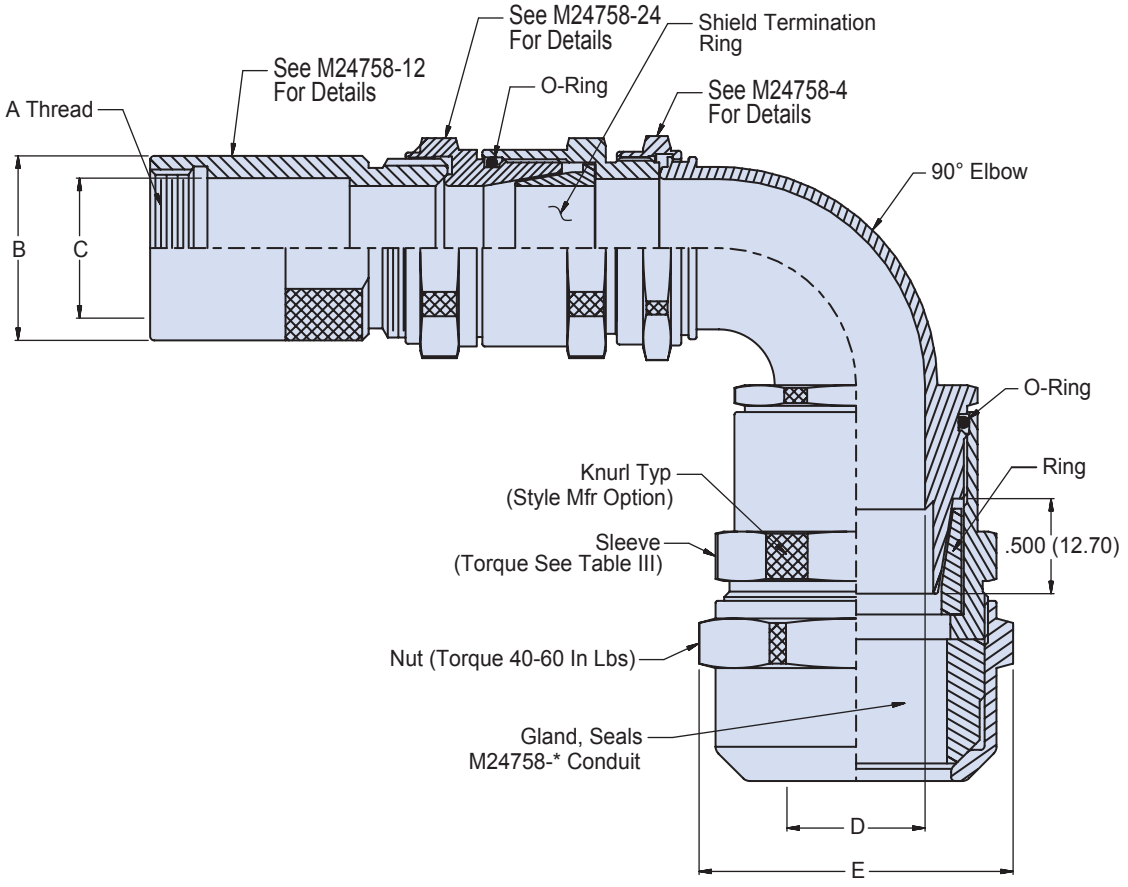

© 2013 Glenair, Inc.

GLENAIR, INC. • 1211 AIR WAY • GLENDALE, CA 91201-2497 • 818-247-6000 • FAX 818-500-9912
www.glenair.com
E-Mail: sales@glenair.com

MIL-PRF-24758-56
90° Adapter for MIL-C-26482 Series I Connectors
EMI/RFI to Glenair MIL-PRF-25758-* Conduit

Glenair®

TABLE I: CONNECTOR SIZE CODE

CONNECTOR SIZE CODE	D DIA MIN	E DIA MIN
A	.245 (6.22)	1.18 (29.97)
B	.495 (12.57)	1.45 (36.83)
C	.745 (18.92)	1.79 (45.47)
D	.995 (25.27)	2.06 (52.32)
E	1.245 (31.62)	2.32 (58.93)
F	1.495 (37.97)	2.59 (65.79)
G	1.995 (50.67)	3.26 (82.80)
H	2.495 (63.37)	3.80 (96.52)
J	.370 (9.40)	1.32 (33.53)
K	.620 (15.75)	1.66 (42.16)
L	2.995 (76.07)	4.34 (110.24)

TABLE II: CONDUIT SHELL SIZE

CONDUIT SHELL SIZE	A THREAD CLASS - 2B	B DIA ± .020 (0.51)	C DIA ± .020 (0.51)
08	3/4-20 UNEF	.590 (14.99)	.340 (8.64)
10	7/8-20 UNEF	.710 (18.03)	.450 (11.43)
12	1.000-20 UNEF	.840 (21.34)	.570 (14.48)
14	1 1/8-18 UNEF	.960 (24.38)	.680 (17.27)
16	1 1/4-18 UNEF	1.090 (27.69)	.810 (20.57)
18	1 3/8-18 UNEF	1.210 (30.73)	.930 (23.62)
20	1 5/8-18 UNEF	1.340 (34.04)	1.060 (26.92)
22	1 7/8-16 UN	1.460 (37.08)	1.180 (29.97)
24	2 1/16-16 UNS	1.590 (40.39)	1.310 (33.27)

TABLE III: Recommended Sleeve Torque

CONDUIT SIZE CODE	± 5 INCH POUNDS
A	120
B	140
C	150
D	170
E	170
F	170
G	170
H	170
J	120
K	140
L	170

APPLICATION NOTES

1. Assembly identified with manufacurer's name and part number and classification code 490, space permitting.
2. The function of the M24758-56 fitting is to terminate M24758-* flexible shielding conduit and to provide individual M24758-24 shield termination on a standard thread for attaching to a M24758-12 fitting.
3. Material / Finish:
   Adapters, coupling nut, elbow, nuts, sleeves and rings - 316L SST/ Electroless nickel, matte finish.
   O-Rings and gland - Silicone rubber/NA
4. Metric dimensions (mm) are indicated in parentheses.

© 2013 Glenair, Inc. CAGE Code 06324 Rev. 11.25.14 Printed in U.S.A.

MIL-PRF-24758-57
90° Adapter for MIL-C-26482 Series I Connectors
Per Table I, EMI/RFI to M24758-* Conduit

Basic Number	Conduit Size Code *(Table II)*	Connector Dash Number *(Table I)*
M24758-57	B	14

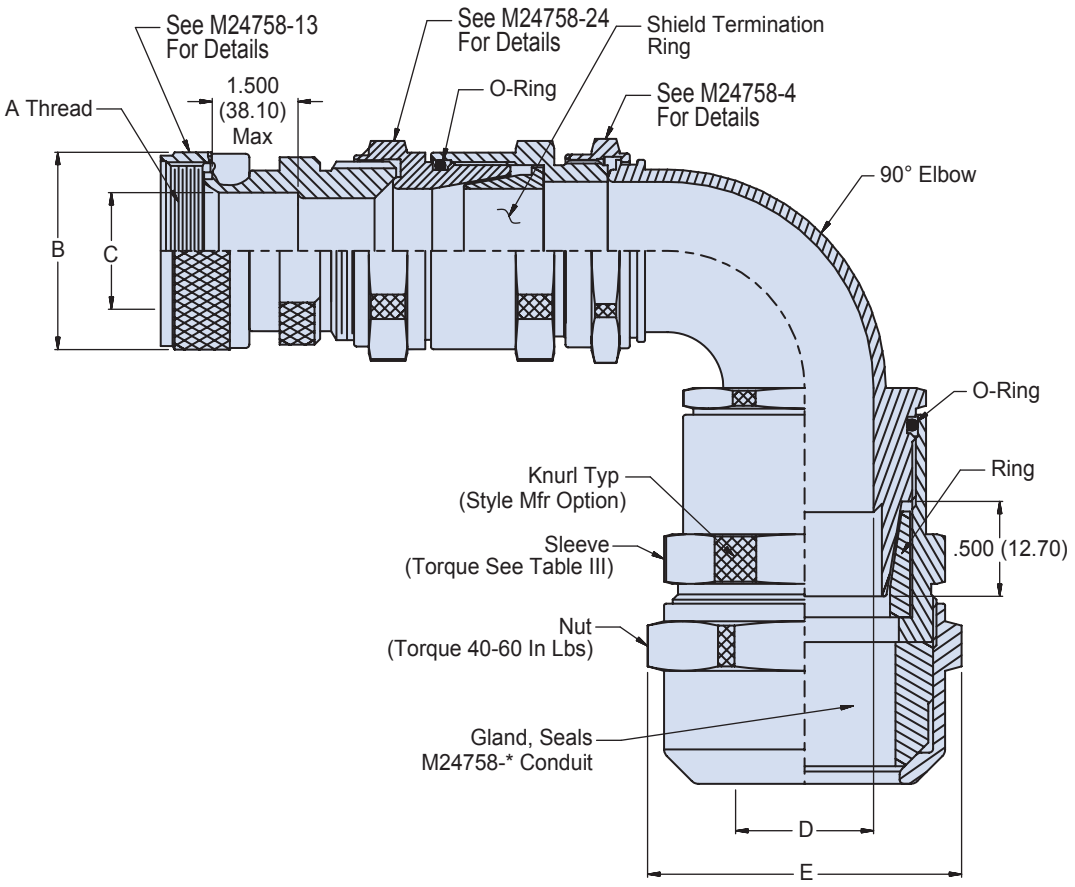

© 2013 Glenair, Inc.

GLENAIR, INC. • 1211 AIR WAY • GLENDALE, CA 91201-2497 • 818-247-6000 • FAX 818-500-9912
www.glenair.com
E-Mail: sales@glenair.com

MIL-PRF-24758-57
90° Adapter for MIL-C-26482 Series I Connectors
Per Table I, EMI/RFI to M24758-* Conduit

Glenair®

TABLE I: CONNECTOR DASH NUMBER AND FITTING DIMENSIONS

CONNECTOR DASH NUMBER	NAS 1599 AND MIL-DTL-83723 SERIES 1 AND 3	MIL-DTL-5015 MS3400 SERIES	AS81703 NAVY SERIES 3	MIL-C-26482 SERIES 2	A THREAD CLASS 2B	B DIA MAX	C DIA REF
03	—	—	03	—	.562-24 UNEF	.669 (16.99)	.270 (6.86)
08	08	8S	—	08	.500-20 UNEF	.617 (15.67)	.270 (6.86)
10	10	10S, 10SL	—	10	.625-24 UNEF	.734 (18.64)	.375 (9.53)
12	12	12, 12S	07	12	.750-20 UNEF	.858 (21.79)	.511 (12.98)
14	14	14, 14S	12	14	.875-20 UNEF	.984 (24.99)	.585 (14.86)
16	16	16, 16S	19	16	1.000-20 UNEF	1.112 (28.24)	.710 (18.03)
18	18	18	27	18	1.062-18 UNEF	1.218 (30.94)	.789 (20.04)
20	20	20	37	20	1.188-18 UNEF	1.345 (34.16)	.914 (23.22)
22	22	22	—	22	1.312-18 UNEF	1.468 (37.29)	1.039 (26.39)
24	24	24	—	24	1.438-18 UNEF	1.593 (40.46)	1.154 (29.31)
28	—	28	—	—	1.750-18 UNS	1.969 (50.01)	1.389 (35.28)
32	—	32	—	—	2.000-18 UNS	2.219 (56.36)	1.635 (41.53)
36	—	36	—	—	2.250-16 UN	2.469 (62.71)	1.850 (46.99)
40	—	40	—	—	2.500-16 UN	2.719 (69.06)	2.065 (52.45)
44	—	44	—	—	2.750-16 UN	2.969 (75.41)	2.320 (58.93)
48	—	48	—	—	3.000-16 UN	3.219 (81.76)	2.570 (65.28)
61	—	—	61	—	1 5/8-18 UNEF	1.653 (41.99)	1.194 (30.33)

TABLE II: CONDUIT SIZE CODE

CONDUIT SIZE CODE	D DIA MIN	E DIA MIN
A	.245 (6.22)	1.18 (29.97)
B	.495 (12.57)	1.45 (36.83)
C	.745 (18.92)	1.79 (45.47)
D	.995 (25.27)	2.06 (52.32)
E	1.245 (31.62)	2.32 (58.93)
F	1.495 (37.97)	2.59 (65.79)
G	1.995 (50.67)	3.26 (82.80)
H	2.495 (63.37)	3.80 (96.52)
J	.370 (9.40)	1.32 (33.53)
K	.620 (15.75)	1.66 (42.16)
L	2.995 (76.07)	4.34 (110.24)

TABLE III: Recommended Sleeve Torque

CONDUIT SIZE CODE	± 5 INCH POUNDS
A	120
B	140
C	150
D	170
E	170
F	170
G	170
H	170
J	120
K	140
L	170

APPLICATION NOTES

1. Assembly identified with manufacurer's name and part number and classification code 490, space permitting.
2. The function of the M24758-57 fitting is to terminate M24758-* flexible shielding conduit and to provide individual M24758-24 shield termination on a standard thread for attaching to a M24758-13 fitting.
3. Material / Finish:
   Adapters, coupling nut, elbow, nuts, sleeves and rings - 316L SST/ Electroless nickel, matte finish.
   O-Rings and gland - Silicone rubber/NA
4. Metric dimensions (mm) are indicated in parentheses.

© 2013 Glenair, Inc.

GLENAIR, INC. • 1211 AIR WAY • GLENDALE, CA 91201-2497 • 818-247-6000 • FAX 818-500-9912
www.glenair.com E-Mail: sales@glenair.com

759-840
Conduit Assembly

Basic Number		Conduit Dash Number *(Table I)*		Length *In Inches (See Note 2)*		Mod Code *(If Applicable)*
759-840	-	32	-	36	-	181

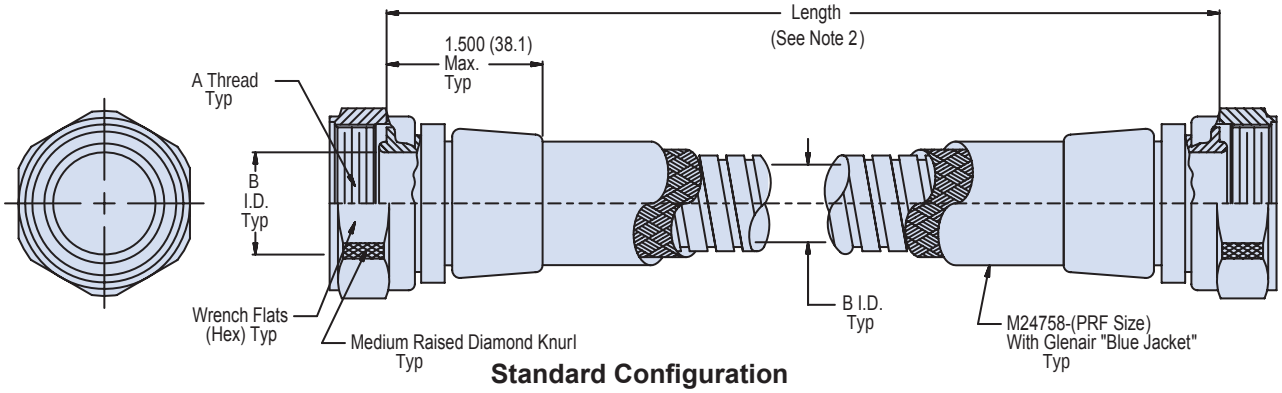

Standard Configuration

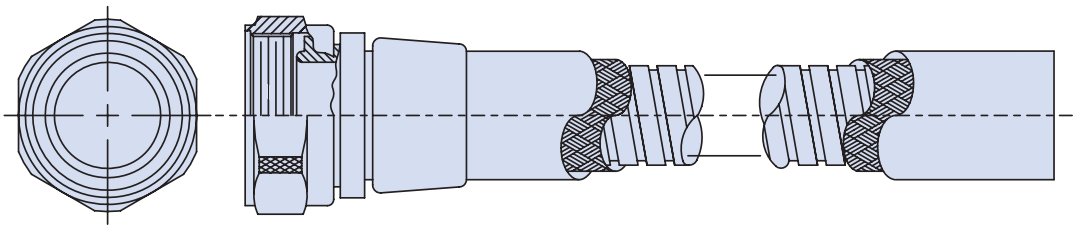

-181 Mod Code Option Configuration

APPLICATION NOTES

1. Assembly identified with manufacurer's code identification number.
2. Length tolerance is 0-24" = ±1/4, for longer lengths is ±1% of length.
3. Glenair series 600 backshell assembly tools are recommended for assembly and installation.
4. Material / Finish:
   Adapter, ferrule, coupling nut - 316L SST/Electroless nickel, matte finish.
   O-Ring - Silicone rubber/NA
5. Metric dimensions (mm) are indicated in parentheses.

© 2013 Glenair, Inc.

TABLE I: CONDUIT SIZE CODE			
CONDUIT DASH NO.	MIL PRF SIZE	A THREAD CLASS 2B	B MIN.
08	A	7/16-28 UNEF	.245 (6.2)
12	J	9/16-24 UNEF	.370 (9.4)
16	B	11/16-24 UNEF	.495 (12.6)
20	K	13/16-20 UNEF	.620 (15.7)
24	C	15/16-20 UNEF	.745 (18.9)
32	D	1 1/4-18 UNEF	.995 (25.3)
40	E	1 9/16-18 UNEF	1.245 (31.6)
48	F	1 7/8-16 UN	1.495 (38.0)
64	G	2 3/8-16 UN	1.995 (50.7)
80	H	2 7/8-16 UN	2.495 (63.4)
96	L	3 3/8-16 UN	2.995 (76.1)

© 2013 Glenair, Inc.

GLENAIR, INC. • 1211 AIR WAY • GLENDALE, CA 91201-2497 • 818-247-6000 • FAX 818-500-9912
www.glenair.com
E-Mail: sales@glenair.com

759-861
Connector to Connector
Factory Terminated Conduit Assembly

Basic Number	Adapter "A" Connector Designator *A,C,D,F,G,H & W* (Tables I & II)	Adapter "A" Shell Size (Table II)	Adapter "B" Connector Designator *A,C,D,F,G,H & W* (Tables I & II)	Adapter "B" Shell Size (Table II)	Conduit Dash Number (Table II)	Length In Inches (See Note 3)
759-861	A	16	H	15	20	50.5

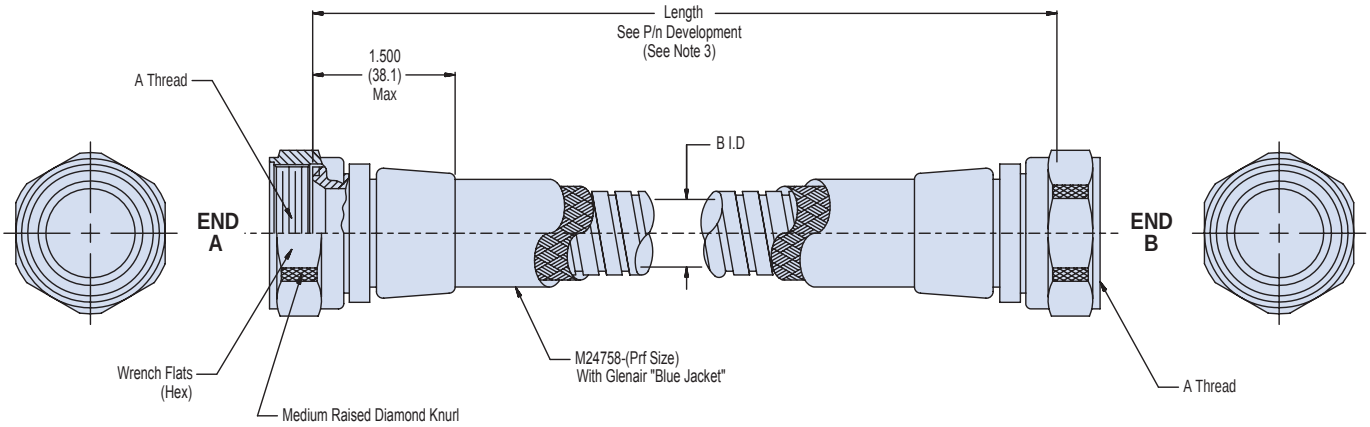

APPLICATION NOTES

1. Assembly identified with manufacurer's code identification.
2. Glenair 600 series backshell assembly tools are recommended for assembly installation.
3. Length tolerance is 0-24" = ±1/4", for longer lengths is ±1% of length.
4. Material / Finish:
   Adapter, ferrule & coupling nut - AISI 316L stainless steel / electroless nickel, matte finish.
5. Metric dimensions (mm) are indicated in parentheses.

© 2013 Glenair, Inc.

GLENAIR, INC. • 1211 AIR WAY • GLENDALE, CA 91201-2497 • 818-247-6000 • FAX 818-500-9912
www.glenair.com
E-Mail: sales@glenair.com

TABLE I: CONNECTOR CODE	
CONN. CODE	SPECIFICATION
A	MIL-DTL-5015 (MS34**) MIL-DTL-26482 Series II MIL-DTL-83723 Series I, III
C	MIL-C-22992 Series R
D	MIL-C-26482 Series I
F	MIL-DTL-38999, Series I
G	MIL-C-28840
H	MIL-DTL-38999 Series III, IV
W	Glenair Series 22 (Geo-Marine®)

TABLE II: CONDUIT DASH NO.		
CONDUIT DASH NO	MIL PRF SIZE	B MIN.
08	A	.245 (6.22)
12	J	.370 (9.40)
16	B	.495 (12.57)
20	K	.620 (15.75)
24	C	.745 (18.92)
32	D	.995 (25.27)
40	E	1.245 (31.62)
48	F	1.495 (37.97)
64	G	1.995 (50.67)
80	H	2.495 (63.37)
96	L	2.995 (76.07)

© 2013 Glenair, Inc.

GLENAIR, INC. • 1211 AIR WAY • GLENDALE, CA 91201-2497 • 818-247-6000 • FAX 818-500-9912
www.glenair.com
E-Mail: sales@glenair.com

759-862
Connector to Adapter
Factory Terminated Conduit Assembly

Adapter "A" Connector Designator	Adapter "B"	Optimal Conduit Size Dash Number
A,C,D,F,G,H & W (See Table I and Note 2) *M = Mighty Mouse (See Table IV)*	*T = Transition Adapters* *(See Note 4)*	*(See Table V)* *Omit for Standard*

759-862	A	16	T	20	-	16	-	50.5
Basic Number		Adapter "A" Shell Size *(See Note 2)*		Standard Transition/Conduit Dash Number *(See Table II)*				Length *In Inches (See Note 3)*

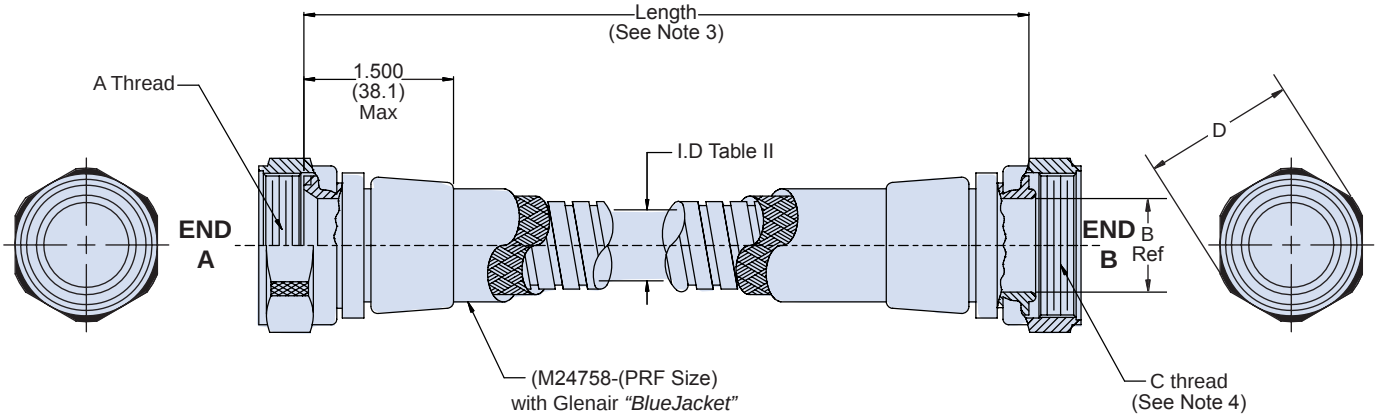

APPLICATION NOTES

1. Assembly identified with manufacurer's code identification.
2. See Common Accessory Interface Data on page G-2 and Table IV for Mighty Mouse interface.
3. Length tolerance is 0-24" = ±1/4", for longer lengths is ±1% of length. Specify length in inches.
4. End "B" adapter (C thread) mates with corresponding MIL-PRF-24758-* adapter (see Table III).
5. Glenair 600 series backshell assembly tools are recommended for assembly installation.
6. Glenair series 600 backshell assembly tools are recommended for assembly and installation.
7. Material / Finish:
   Adapter, ferrule & coupling nut - AISI 316L stainless steel / electroless nickel, matte finish.
   Conduit - See individual drawing.
8. Metric dimensions (mm) are indicated in parentheses.

© 2013 Glenair, Inc.

GLENAIR, INC. • 1211 AIR WAY • GLENDALE, CA 91201-2497 • 818-247-6000 • FAX 818-500-9912
www.glenair.com
E-Mail: sales@glenair.com

759-862
Connector to Adapter
Factory Terminated Conduit Assembly

Glenair®

TABLE I: Connector Code

CONN. CODE	SPECIFICATION
A	MIL-DTL-5015 (MS34**) MIL-DTL-26482 Series II MIL-DTL-83723 Series I, III
C	MIL-C-22992 Series R
D	MIL-C-26482 Series I
F	MIL-DTL-38999, Series I
G	MIL-C-28840
H	MIL-DTL-38999 Series III, IV
W	Glenair Series 22 (Geo-Marine®)

TABLE II: Standard Transition/Conduit Dash No.

DASH NUMBER	MIL PRF SIZE	B MIN	C THREAD CLASS 2B	D MAX
08	A	.245 (6.22)	.438-28 UNEF	.880 (22.4)
12	J	.370 (9.40)	.563-24 UNEF	.940 (23.9)
16	B	.495 (12.57)	.688-24 UNEF	1.130 (28.7)
20	K	.620 (15.75)	.813-20 UNEF	1.190 (30.2)
24	C	.745 (18.92)	.938-20 UNEF	1.380 (35.1)
32	D	.995 (25.27)	1.250-18 UNEF	1.690 (42.9)
40	E	1.245 (31.62)	1.563-18 UNEF	2.000 (50.8)
48	F	1.495 (37.97)	1.875-16 UN	2.310 (58.7)
64	G	1.995 (50.67)	2.375-16 UN	2.940 (74.7)
80	H	2.495 (63.37)	2.875-16 UN	3.440 (87.4)
96	L	2.995 (76.07)	3.375-16 UN	3.940 (100.1)

TABLE III: (Reference Only)

MIL PRF DASH NO.	END "B" MATING ADAPTERS MIL-PRF-24758
9	MS3100 Series MIL-DTL-5015
11	Coaxial Connectors
12	MIL-DTL-26482 Series I (Code D Table I)
13	MS3155 Series (Code A Table I)
14	MIL-DTL-28840 (Code G Table I)
15	MIL-S-24235 Stuffing Tubes
16	Miscellaneous Fittings
17	Tapered Pipe Thread
18	Straight Pipe Thread
19	Bulkhead Termination
20	MIL-DTL-38999 (Codes F & H Table I)
22	Glenair Series 22 Geo-Marine® (Code W Table I)
23	Union Fitting
24	Shielded Cable Fitting

TABLE IV: Order Number, Shell Size Reference and Thread

Order Number	Shell Size Ref 800/801 803/804	Shell Size Ref 805	A Thread Class 2B
05	05	N/A	1/4-32 UNEF
06	06	N/A	5/16-32 UNEF
11	N/A	08	3/8-32 UNEF
07	07	09	7/16-28 UNEF
08	08	10	1/2-28 UNEF
09	09	11	9/16-24 UNEF
10	10	12	5/8-24 UNEF
12	11/12/13	N/A	11/16-24 UNEF
13	N/A	15	3/4-20 UNEF
14	14/15/16/17	18/19	15/16-20 UNEF
17	21	23	1 3/16-18 UNEF

TABLE V: Conduit Size, MIL-PRF Size and B Dimension

Conduit Size Dash Number	MIL-PRF Size	B Min
08	A	.245 (6.22)
12	J	.370 (9.40)
16	B	.495 (12.57)
20	K	.620 (15.75)
24	C	.745 (18.92)
32	D	.995 (25.27)
40	E	1.245 (31.62)
48	F	1.495 (37.97)
64	G	1.995 (50.67)
80	H	2.495 (63.37)
96	L	2.995 (76.07)

© 2013 Glenair, Inc.

GLENAIR, INC. • 1211 AIR WAY • GLENDALE, CA 91201-2497 • 818-247-6000 • FAX 818-500-9912
www.glenair.com
E-Mail: sales@glenair.com

MIL-DTL-28840

CONNECTOR ACCESSORIES

No Gaps: Every Slash Sheet, Every Size.

Miltary Connector Specification	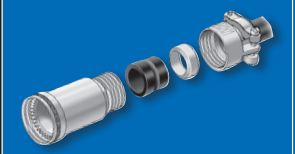 37 Environmental Backshells	39 EMI/RFI Environmental Backshells	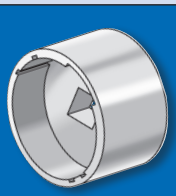 60 Connector Sockets	61 "E" Nuts Non-Self-Locking
MIL-DTL-28840	M28840/6 B Straight M28840/9 B 45° M28840/8 B 90°	M28840/6 A Straight M28840/9 A 45° M28840/8 A 90°	600G005*	M28840/23

Miltary Connector Specification	62 Strain Reliefs Non-Self-Locking	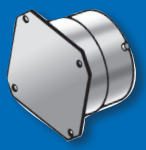 65 Dummy Stowage Receptacles	66 Protective Plug Covers	66 Protective Receptacle Covers
MIL-DTL-28840	M28840/1 Straight M28840/3 45° M28840/2 90°	M28840/7	M28840/15	M28840/13

Miltary Connector Specification	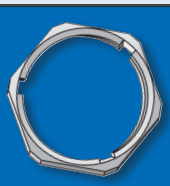 68 Jam Nuts	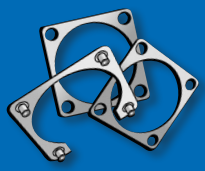 68 Mounting Flanges and Gaskets	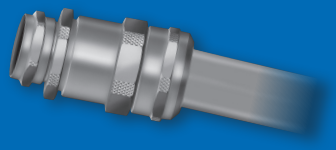 70 - 74 MIL-PRF-24758A Conduit Fittings
MIL-DTL-28840	MS3186	M28840/24 Gasket	M24758-14 Straight (M24758/14 Straight.)* M28840/5 Straight M28840/25 90° M28840/27 45° M28840/30 Coupling

Glenair, Inc.
1211 Air Way • Glendale, CA 91201-2497
Tel: 818-247-6000 • Fax: 818-500-9912
E-Mail: sales@glenair.com

Qualified Military Standard Electrical Connectors and Accessories for Shipboard Applications

Ideal for All Rugged Environmental Applications

The standard connector and backshell series for shipboard use, MIL-DTL-28840 offers high-density insert arrangement and high-shock performance. Glenair's qualified product line is fully tooled and highly available.

The MIL-DTL-28840 features RFI/EMI shielding, scoop-proof shells and corrosion resistant materials and finishes. In addition to all the connector types and styles, Glenair makes all the backshell accessory slash numbers as well.The addition of the MIL-DTL-28840 connector product line is part of Glenair's total commitment to meeting all your shipboard interconnect requirements. So, if a rugged, environmental M28840 solution is in your future, think Glenair—from connectors to accessories.

PRODUCT FEATURES

- High Density, Scoop Proof Insert Arrangements
- Flange Mount, Box Mount, Jam-Nut and In-Line Receptacles
- Straight, 45° and 90° Strain Reliefs and Backshell Assemblies
- Sav-Con® Connector Savers
- MIL-DTL-28840 Qualified
- Additional Glenair Commercial Part Numbers with Features Not Available in the Mil-Spec

MIL-DTL-28840 In a Nutshell:

MIL-DTL-28840 connectors were developed for the Navy for use in shipboard applications. They are a high density, environmental, circular connector series utilizing a high shock, threaded coupling system with front release crimped contacts. Note the splined backshell interface and the integrated wire sealing grommet that both add to the environmental and mechanical performance of this ruggedized connector.

© 2013 Glenair, Inc.

GLENAIR, INC. • 1211 AIR WAY • GLENDALE, CA 91201-2497 • 818-247-6000 • FAX 818-500-9912
www.glenair.com
E-Mail: sales@glenair.com

MIL-DTL-28840
Shipboard Electrical Connectors
Performance Specifications, Class and Finishes

Performance Specifications	
Current Rating (Maximum)	Size #20 Contact; 20AWG 7.5A, 22AWG 5.0A, 28AWG 1.5A, 30AWG 1.0A
Test Voltage (Dielectric Withstanding Voltage)	1000 VAC RMS at sea level. Test per EIA-364-20
Insulation Resistance	5000 megohms minimum (at ambient temperature) per EIA-364-21
Contact Resistance	Per SAE-AS39029
Operating Temperature	-55° C. to +200° C.
Fluid Immersion	per test method EIA-364-10
Shock	in accordance with MIL-S-901 grade A
Vibration	per EIA-364-28 test procedure
Magnetic Permeability	2.0 µ (Aluminum), 5.0 µ (Stainless Steel) maximum; ASTM-A342/A342M

Materials and Finishes	
Shells, Coupling Nuts, Jam Nuts	Aluminum alloy per ASTM B211, or stainless steel per AMS-QQ-S-763
Contacts	Copper alloy, 50 µInch gold plated per ASTM B488 Type 3, Code C, Class 1,27 over nickel underplate per QQ-N-290 Class 2. Socket contact hood: stainless steel, passivated.
Insulators	High Grade Engineering Plastic per ASTM D5948
Contact Retention Clip	Beryllium copper
Shells, Coupling Nuts, Jam Nut Plating Finish	Stainless Steel, Black Cadmium plated
Grommet, Seal	Blended elastomer, 30% silicone per ZZ-R-765, 70% fluorosilicone per MIL-R-25988

Contact Code	Type	Contact Spec.	Contact Size	Acceptable Wire Size	Outside Diameter of Finished Wire	
					Minimum	Maximum
F	Pin	SAE-AS39029/83-508	20-20	24 22 20	.040 (1.02)	.070 (1.78)
G	Socket	SAE-AS39029/84-509				
P	Pin	SAE-AS39029/83-450	20-22	26 24 22		
S	Socket	SAE-AS39029/84-452				
D	Pin	SAE-AS39029/83-451	20-28	32 30 28		
E	Socket	SAE-AS39029/84-453				

Notes
To achieve sealing, wires must be built up to finished wire diameter.
In accordance with MIL-DTL-24643 and MIL-DTL-16878.

© 2013 Glenair, Inc. CAGE Code 06324 Printed in U.S.A.

M22520/34-01, M22520/34-02, M22520/35, M81969/33-01, M81969/33-02, and M81969/34-01
Contact Crimping, Insertion and Removal Tools for MIL-DTL-28840 Connectors

M22520/34-01 Basic Crimp Tool

Qualified to M22520/34-01, this crimp tool prevents improper crimps and overcrimping and is based on the AFM8 miniature adjustable crimp tool. It performs a modified eight impression crimp with a precision cycle controlled ratcheting mechanism for gas-tight wire terminations and excellent tensile strength. Also featured is a four-step crimp-depth selector knob, and is designed for use with the M22520/34-02 bayonet-type Positioner. Gaging is accomplished with the M22520/35 "go/No-Go" Gage. The adjustment wheel has eight settings. Check calibration with the M22520/35 gage. Length is 6.75 inches, weight is approximately 10 oz.

M22520/34-02 Positioner

This bayonet-type positioner locates and holds contacts at the correct position for crimping with the M22520/34-01 Basic Crimp Tool. The face plate shows the correct tool settings.

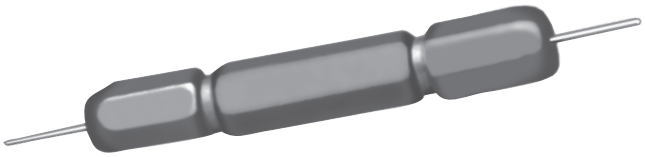

M22520/35 Gage

Periodic Gaging is recommended to ensure accurate calibration, and is easily accomplished by setting the tool selector knob to the proper position and checking the indenter closure with the M22520/35 "Go/No-Go" Gage. Color coded anodized aluminum with stainless steel probes.

Insertion and Removal Tools

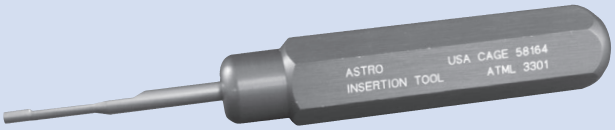

M81969/33-01 Straight Insertion Tool

The M81969/33-01 Straight Insertion Tool is approved for use on MIL-DTL-28840 connectors and features an anodized aluminum handle and stainless steel insertion tip.

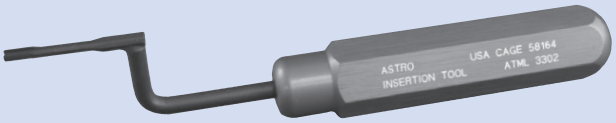

M81969/33-02 Offset Insertion Tool

Approved for use on MIL-DTL-28840 connectors, the M81969/33-02 Offset Insertion Tool features an anodized aluminum handle and stainless steel offset insertion tip.

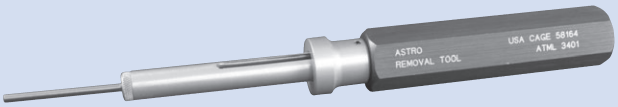

M81969/34-01 Removal Tool

Designed and approved for removal of contacts and in MIL-DTL-28840 connectors, the M81969/34-01 Removal Tool's anodized aluminum handle and stainless steel tip will provide many years of reliable service.

© 2013 Glenair, Inc. CAGE Code 06324 Printed in U.S.A.

MIL-DTL-28840 Connector Contact Insertion/Extraction Instructions

Contact Insertion

1. Tools:

Be sure that all proper assembly tools are on hand and properly calibrated (Figure 1). See previous page for complete descriptions of required tools.

2. Stripping:

Strip wire ends to 3/16" for 20-32 AWG, taking care not to nick or cut wire strands (Figure 2). Hold insulation and twist strands to eliminate any splaying.

3. Wire Insertion:

Insert wire into crimp well of contact. **Do Not Force**. Wire strands must be visible through inspection hole (Figure 3).

4. Crimping:

Using crimp tool and positioner noted above, insert wire and contact into locator jaws. Squeeze tool handle completely until ratchet releases. Remove wired contact from tool (Figure 4).

5. Backshell Preparation:

Slide backshell/strain relief over jacketed cable or wires in proper order for re-assembly. Consult Glenair backshell catalog or contact factory for proper jacketed cable assembly (Figure 5).

6. Contact Preparation:

Slide wired contact into insertion tool of choice so that the tip of the tool butts against the shoulder of the contact (Figure 6).

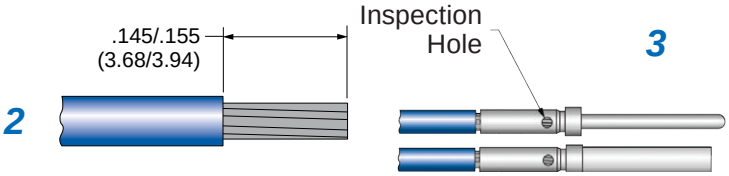

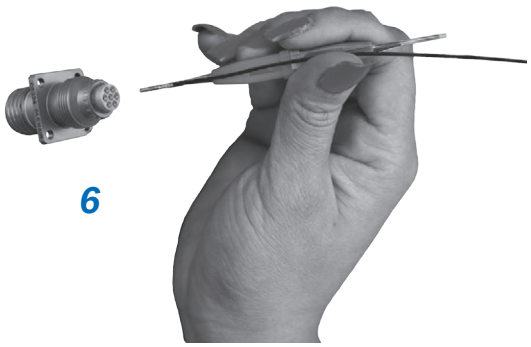

© 2013 Glenair, Inc. CAGE Code 06324 Printed in U.S.A.

MIL-DTL-28840 Connector Contact Insertion/Extraction Instructions

1. Insertion of Contacts:

Insert wired contacts and tool into contact cavity until contact "clicks" into retention clip (Figure 7). A straight pull on the wire will assure the contact is properly seated. Note: Isopropyl alcohol may be used as a lubricant. Use sparingly.

2. Assembly:

After all contacts are inserted, assemble backshell or strain relief according to Glenair backshell catalog instructions.

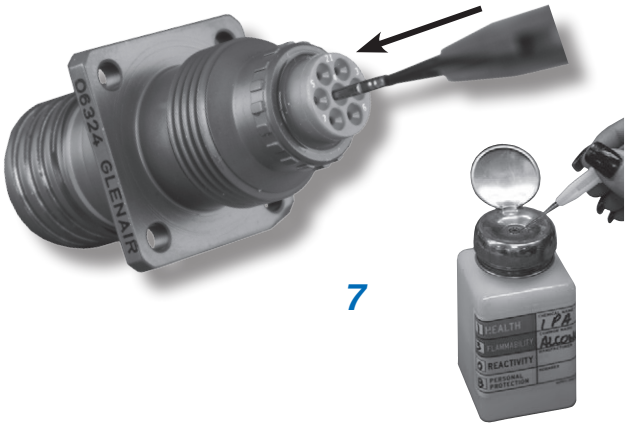

7

Contact Extraction

1. Contact Extraction:

Remove backshell or strain relief from connector.

2. Contact Extraction:

MIL-DTL-28840 connector contacts are extracted from the rear but released from the front of the connector. Using an extraction tool, slide tool tip into front of contact cavity (mating face of connector, figure 8) until tool tip engages against contact retention clip. Push plunger with minimum force to release contact (Figure 9). Note: Isopropyl alcohol may be used as a lubricant. Use sparingly.

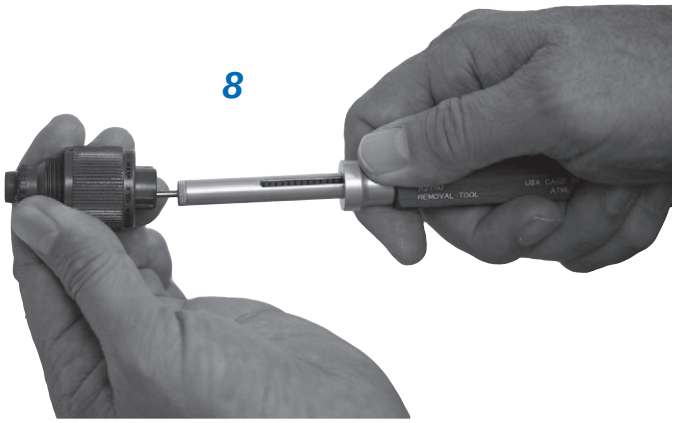

8

3. Contact Extraction:

Pull wired contact from rear grommet of connector.

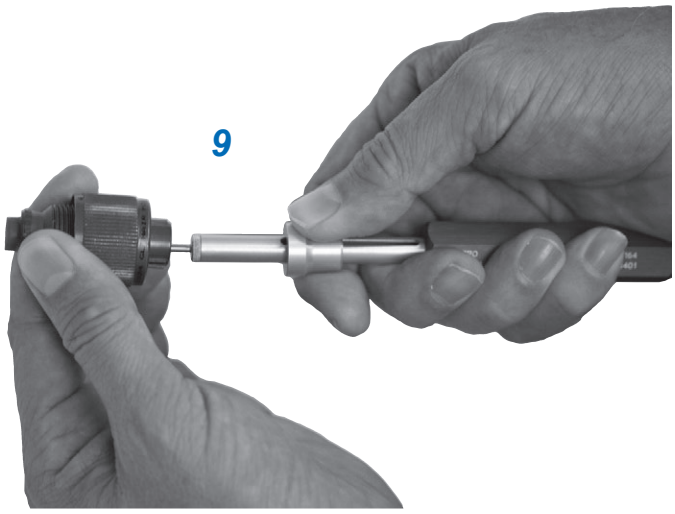

9

Contact Replacement:

After replacing contact, re-insert starting with assembly instruction number 7.

© 2013 Glenair, Inc.

GLENAIR, INC. • 1211 AIR WAY • GLENDALE, CA 91201-2497 • 818-247-6000 • FAX 818-500-9912
www.glenair.com E-Mail: sales@glenair.com

MIL-DTL-28840 Connectors
Standard Insert Arrangements

Shell Size 11
7 Contacts

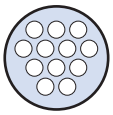

Shell Size 13
12 Contacts

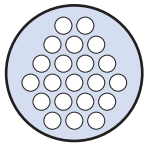

Shell Size 15
21 Contacts

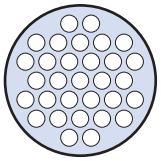

Shell Size 17
31 Contacts

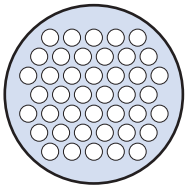

Shell Size 19
42 Contacts

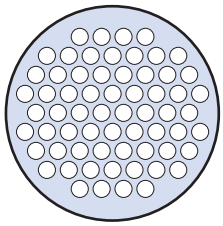

Shell Size 23
64 Contacts

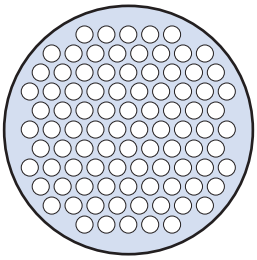

Shell Size 25
92 Contacts

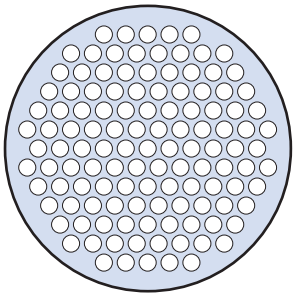

Shell Size 29
121 Contacts

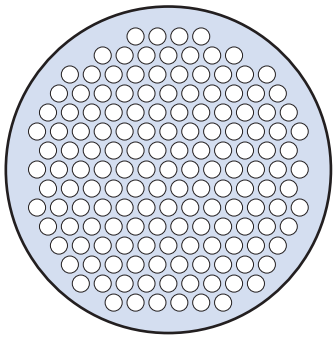

Shell Size 33
155 Contacts

Insert Arrangements per MIL-STD-1698

© 2013 Glenair, Inc.

GLENAIR, INC. • 1211 AIR WAY • GLENDALE, CA 91201-2497 • 818-247-6000 • FAX 818-500-9912
www.glenair.com
E-Mail: sales@glenair.com

MIL-DTL-28840
Polarization Keyways

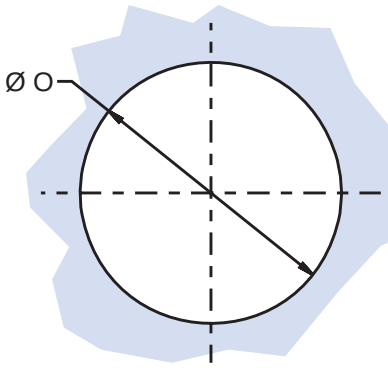

Recommended Panel Cut-Out Box Mount

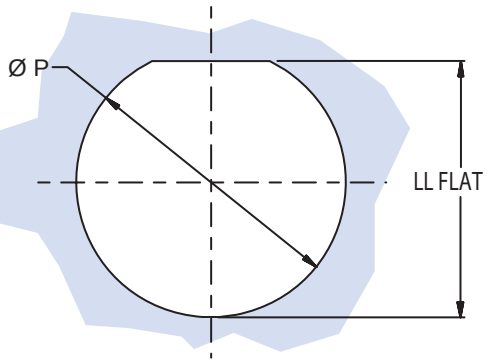

Recommended Panel Cut-Out Jam-Nut Mount

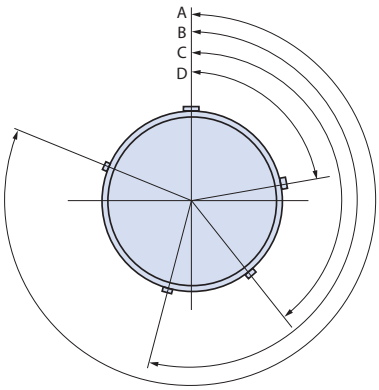

Table I: Panel Cutout

Designator	P Dia.	LL Flat	O Ref. Mtg. Hole
A (11)	.890 .880	.853 .843	.812
B (13)	1.015 1.005	.978 .968	.937
C (15)	1.203 1.193	1.165 1.155	1.124
D (17)	1.265 1.255	1.228 1.218	1.187
E (19)	1.453 1.443	1.415 1.405	1.374
F (23)	1.640 1.630	1.603 1.593	1.562
G (25)	1.765 1.755	1.728 1.718	1.687
H (29)	1.953 1.943	1.915 1.905	1.874
J (33)	2.140 2.130	1.103 2.093	2.062

Table II: Alternate Keyways

Designator	Key and Keyway Arrangement	AR° or AP° BSC	BR° or BP° BSC	CR° or CP° BSC	DR° or DP° BSC
A (11) B (13)	1	95	141	208	236
	2	113	156	182	292
	3	90	145	195	252
	4	53	156	220	255
	5	119	146	176	298
	6	51	141	184	242
C (15) D (17)	1	80	142	196	293
	2	135	170	200	310
	3	49	169	200	244
	4	66	140	200	257
	5	62	145	180	280
	6	79	153	197	272
E (19) F (23) G (25) H (29) J (33)	1	80	142	196	293
	2	135	170	200	310
	3	49	169	200	244
	4	66	140	200	257
	5	62	145	180	280
	6	79	153	197	272

© 2013 Glenair, Inc.

GLENAIR, INC. • 1211 AIR WAY • GLENDALE, CA 91201-2497 • 818-247-6000 • FAX 818-500-9912
www.glenair.com
E-Mail: sales@glenair.com

M39029/83
850-004
Standard Duty Electrical Pin Contact

M28840

Standard Pin Crimp Contact for MIL-DTL-28840 Connectors

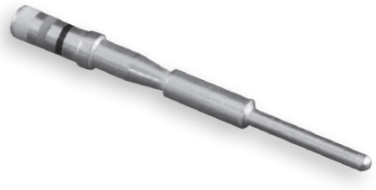

Mating End Size	Wire Accomodation	Military Part Number	Glenair Part Number
20	28-32 AWG	M39029/83-451	850-004-20-451
20	22-26 AWG	M39029/83-450	850-004-20-450
20	20-24 AWG	M39029/83-508	850-004-20-508

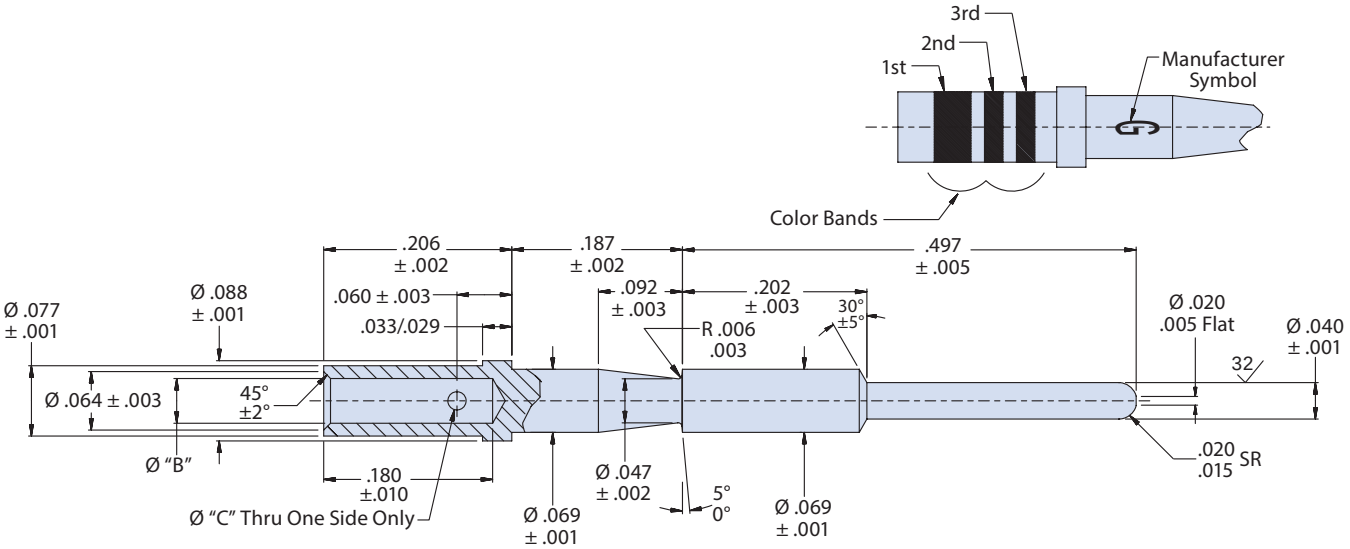

Material and Finish

Pin Contact: copper alloy per ASTM B197, 50 microinches gold plated per ASTM B488 Type II Code C Class 1,27 over nickel plate per QQ-N-290 Class 2, 50-100 microinches. Approved for space flight.

© 2013 Glenair, Inc. CAGE Code 06324 Printed in U.S.A.

M39029/83
850-004
Standard Duty Electrical Pin Contact

Table I: Contact Dimensions

Size	Part Number	Military Number	Ø B	Ø C	Color Bands		
					1st	2nd	3rd
20	850-004-20-508	M39029/83-508	.050 .048	.032 .026	Green	Black	Grey
20	850-004-20-450	M39029/83-450	.0355 .0335	.032 .026	Yellow	Green	Black
20	850-004-20-451	M39029/83-451	.0200 .0180	.022 .018	Yellow	Green	Brown

Table II: Tool Compatibility

Size	Part Number	Military Number	AWG Handling	Crimp Tool	Positioner	Insertion Tool	Extraction Tool
20	850-004-20-508	M39029/83-508	20, 22, 24	M22520/34-01	M22520/34-02	M81969/33-01	M81969/34-01
20	850-004-20-450	M39029/83-450	22, 24, 26	M22520/34-01	M22520/34-02	M81969/33-01	M81969/34-01
20	850-004-20-451	M39029/83-451	28, 30, 32	M22520/34-01	M22520/34-02	M81969/33-01	M81696/34-01

Test	Performance Specifications
Durability	(Meets SAE-AS39029, paragraph 3.5.9) No electrical or mechanical defects after 500 cycles of engagement and disengagement
Contact Retention	(Meets MIL-DTL-38999, paragraph 3.23) The axial displacement of the contact shall not exceed .012 inch (0.30 mm). No damage to contacts or inserts shall result.
Pin Engagement End	(Meets SAE-AS39029 paragraph 3.4.1) Unless otherwise specified, the mating end of all contacts (except size 22 and smaller) shall be formed with an approximate spherical radius.
Permeability	(Meets SAE-AS39029, paragraph 3.5.1) When tested as specified in paragraph 4.7.2, the relative magnetic permeability of the contact shall be no greater than 2.0.
Vibration	(Meets SAE-AS39029, paragraph 3.5.10) When contacts are tested as specified in paragraph 4.7.11, there shall be no electrical discontinuity of 1 microsecond or greater. There shall be no defects detrimental to the mechanical or electrical performance.
Salt Spray (corrosion)	(Meets SAE-AS39029, paragraph 3.5.12) When tested as specified in 4.7.13, mated contacts shall withstand 48 hours of salt spray conditioning without defects detrimental to the mechanical or electrical performance.
Temperature life	(Meets SAE-AS39029, paragraph 3.5.13) When tested as specified in paragraph 4.7.14, mated contacts shall withstand temperature conditioning for 1,000 hours without defects detrimental to mechanical or electrical performance. There shall be no diffusion/migration of the base metal through the contact outer plating.Class A - Maximum operating temperature +125°C. per paragraph 1.2.2
Dielectric withstanding voltage	(Meets SAE-AS39029, paragraph 3.5.19) When tested as specified in paragraph 4.7.20, crimped contacts shall show no evidence of breakdown or flashover.
Workmanship	(Meets SAE-AS39029, paragraph 3.7) Contacts shall be processed in such a manner as to be uniform in quality and shall be free from foreign material and burrs or sharp corners that might damage the connector or affect mating of the contacts. Burrs and sharp edges shall be removed 0.005 inch maximum.

© 2013 Glenair, Inc. CAGE Code 06324 Printed in U.S.A.

M39029/84
850-005
Standard Duty Electrical Socket Contact

M28840

Standard Socket Crimp Contact for MIL-DTL-28840 Connectors

Mating End Size	Wire Accomodation	Military Part Number	Glenair Part Number
20	28-32 AWG	M39029/84-453	850-005-20-453
20	22-26 AWG	M39029/84-452	850-005-20-452
20	20-24 AWG	M39029/84-509	850-005-20-509

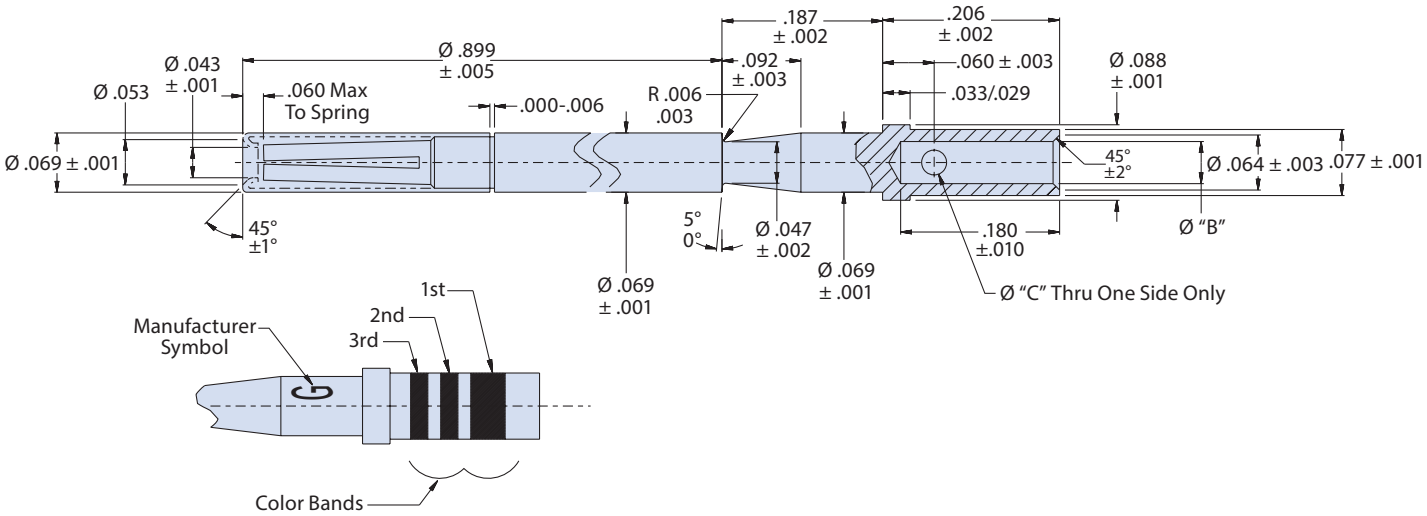

Material and Finish

Socket Contact: Copper alloy per ASTM B197, 50 microinches gold plated per ASTM B488 Type II Code C Class 1,27 over nickel plate per QQ-N-290 Class 2, 50-100 microinches. Approved for space flight.
Socket Contact Hood: Stainless steel, passivated per AMS-QQ-P-35. Approved for space flight.

© 2013 Glenair, Inc.

M39029/84
850-005
Standard Duty Electrical Socket Contact

Table I: Contact Dimensions

Size	Part Number	Military Number	Ø B	Ø C	Color Bands		
					1st	2nd	3rd
20	850-005-20-509	M39029/84-509	.050 .048	.032 .026	Green	Black	White
20	850-005-20-452	M39029/84-452	.0355 .0335	.032 .026	Yellow	Green	Red
20	850-005-20-453	M39029/84-453	.0200 .0180	.022 .018	Yellow	Green	Orange

Table II: Tool Compatibility

Size	Part Number	Military Number	AWG Handling	Crimp Tool	Positioner	Insertion Tool	Extraction Tool
20	850-005-20-509	M39029/84-509	20, 22, 24	M22520/34-01	M22520/34-02	M81969/33-01	M81969/34-01
20	850-005-20-452	M39029/84-452	22, 24, 26	M22520/34-01	M22520/34-02	M81969/33-01	M81969/34-01
20	850-005-20-453	M39029/84-453	28, 30, 32	M22520/34-01	M22520/34-02	M81969/33-01	M81696/34-01

Test	Performance Specifications
Durability	(Meets SAE-AS39029, paragraph 3.5.9) No electrical or mechanical defects after 500 cycles of engagement and disengagement
Contact Retention	(Meets MIL-DTL-38999, paragraph 3.23) The axial displacement of the contact shall not exceed .012 inch (0.30 mm). No damage to contacts or inserts shall result.
Pin Engagement End	(Meets SAE-AS39029 paragraph 3.4.1) Unless otherwise specified, the mating end of all contacts (except size 22 and smaller) shall be formed with an approximate spherical radius.
Permeability	(Meets SAE-AS39029, paragraph 3.5.1) When tested as specified in paragraph 4.7.2, the relative magnetic permeability of the contact shall be no greater than 2.0.
Vibration	(Meets SAE-AS39029, paragraph 3.5.10) When contacts are tested as specified in paragraph 4.7.11, there shall be no electrical discontinuity of 1 microsecond or greater. There shall be no defects detrimental to the mechanical or electrical performance.
Salt Spray (corrosion)	(Meets SAE-AS39029, paragraph 3.5.12) When tested as specified in 4.7.13, mated contacts shall withstand 48 hours of salt spray conditioning without defects detrimental to the mechanical or electrical performance.
Temperature life	(Meets SAE-AS39029, paragraph 3.5.13) When tested as specified in paragraph 4.7.14, mated contacts shall withstand temperature conditioning for 1,000 hours without defects detrimental to mechanical or electrical performance. There shall be no diffusion/migration of the base metal through the contact outer plating.Class A - Maximum operating temperature +125°C. per paragraph 1.2.2
Dielectric withstanding voltage	(Meets SAE-AS39029, paragraph 3.5.19) When tested as specified in paragraph 4.7.20, crimped contacts shall show no evidence of breakdown or flashover.
Workmanship	(Meets SAE-AS39029, paragraph 3.7) Contacts shall be processed in such a manner as to be uniform in quality and shall be free from foreign material and burrs or sharp corners that might damage the connector or affect mating of the contacts. Burrs and sharp edges shall be removed 0.005 inch maximum.

© 2013 Glenair, Inc. CAGE Code 06324 Printed in U.S.A.

M28840/1
Straight Strain Relief

Military Designator	Shell Size Designator	
M28840/1	J	W

Material and Finish
W - Aluminum, Cadmium Plate, O.D. over Electroless Nickel
D - Corrosion Resistant Steel, Cadmium Plate, Black

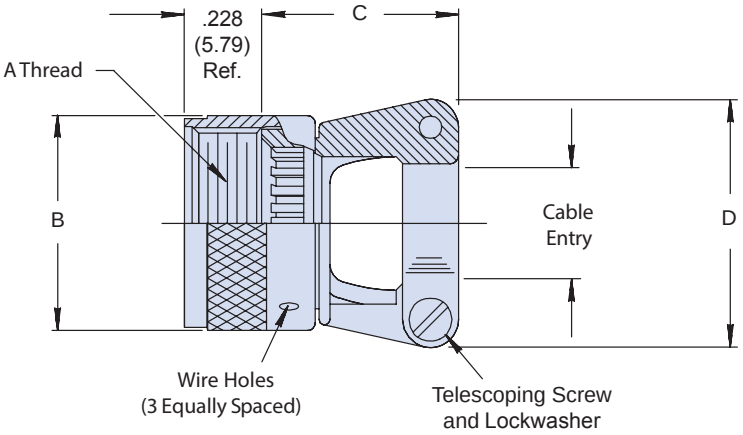

Designator	A Thread Class 2B	B Max. Diameter	C Max.	D Max.	Screw Size Ref.	Cable Entry	
						Min.	Max.
A (11)	.750-20 UNEF	1.028 (26.11)	1.091 (27.71)	.903 (22.94)	.114-40	.177 (4.50)	.286 (7.26)
B (13)	.875-20 UNEF	1.141 (28.98)	1.091 (27.71)	.977 (24.82)	.114-40	.177 (4.50)	.286 (7.26)
C (15)	1.000-20 UNEF	1.263 (32.08)	1.091 (27.71)	1.151 (29.24)	.114-40	.250 (6.35)	.416 (10.57)
D (17)	1.125-18 UNEF	1.387 (35.23)	1.206 (30.63)	1.281 (32.54)	.114-40	.291 (7.39)	.476 (12.09)
E (19)	1.250-18 UNEF	1.513 (38.43)	1.320 (33.53)	1.406 (35.71)	.114-40	.348 (8.84)	.626 (15.90)
F (23)	1.438-18 UNEF	1.703 (43.26)	1.445 (36.70)	1.576 (40.03)	.134-32	.429 (10.90)	.831 (21.11)
G (25)	1.562-18 UNEF	1.825 (46.36)	1.570 (39.88)	1.666 (42.32)	.134-32	.523 (13.28)	.956 (24.28)
H (29)	1.875-16 UN	2.143 (54.43)	1.721 (43.71)	2.046 (51.97)	.134-32	.643 (16.33)	1.081 (27.46)
J (33)	2.062-16 UNS	2.329 (59.16)	1.908 (48.46)	2.209 (56.11)	.162-32	.704 (17.88)	1.187 (30.15)

© 2013 Glenair, Inc. CAGE Code 06324 Printed in U.S.A.

M28840/2
90° Strain Relief

Glenair®

Military Designator	Shell Size Designator	
M28840/2	J	W

Material and Finish
W - Aluminum, Cadmium Plate, O.D. over Electroless Nickel
D - Corrosion Resistant Steel, Cadmium Plate, Black

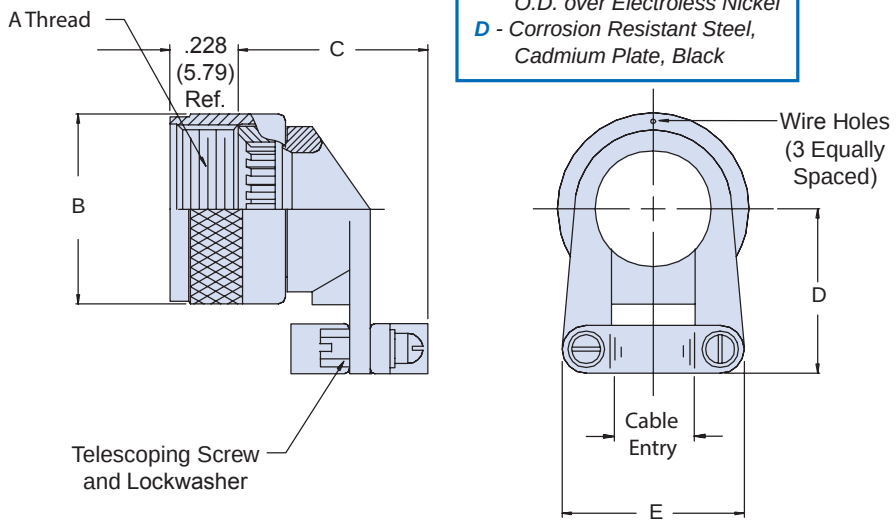

Designator	A Thread Class 2B	B Max. Diameter	C Max.	D Max.	E Max.	Screw Size Ref.	Cable Entry	
							Min.	Max.
A (11)	.750-20 UNEF	1.028 (26.11)	1.071 (27.20)	.929 (23.60)	.903 (22.94)	.114-40	.177 (4.50)	.286 (7.26)
B (13)	.875-20 UNEF	1.141 (28.98)	1.071 (27.20)	.929 (23.60)	.977 (24.82)	.114-40	.177 (4.50)	.286 (7.26)
C (15)	1.000-20 UNEF	1.263 (32.08)	1.280 (32.51)	1.056 (26.82)	1.151 (29.24)	.114-40	.250 (6.35)	.416 (10.57)
D (17)	1.125-18 UNEF	1.387 (35.23)	1.392 (35.36)	1.233 (31.32)	1.281 (32.54)	.114-40	.291 (7.39)	.476 (12.09)
E (19)	1.250-18 UNEF	1.513 (38.43)	1.517 (38.53)	1.296 (32.92)	1.406 (35.71)	.114-40	.348 (8.84)	.626 (15.90)
F (23)	1.438-18 UNEF	1.703 (43.26)	1.642 (41.71)	1.358 (34.49)	1.576 (40.03)	.134-32	.429 (10.90)	.831 (21.11)
G (25)	1.562-18 UNEF	1.825 (46.36)	1.767 (44.88)	1.420 (36.07)	1.666 (42.32)	.134-32	.523 (13.28)	.956 (24.28)
H (29)	1.875-16 UN	2.143 (54.43)	1.905 (48.39)	1.634 (41.50)	2.046 (51.97)	.134-32	.643 (16.33)	1.081 (27.46)
J (33)	2.062-16 UNS	2.329 (59.16)	1.968 (49.99)	1.859 (47.22)	2.209 (56.11)	.162-32	.704 (17.88)	1.187 (30.15)

© 2013 Glenair, Inc. CAGE Code 06324 Printed in U.S.A.

M28840/3
45° Strain Relief

Military Designator	Shell Size Designator	
M28840/3	J	W

Material Type

W *- Aluminum, Cadmium Plate, O.D. over Electroless Nickel*

D *- Corrosion Resistant Steel, Cadmium Plate, Black*

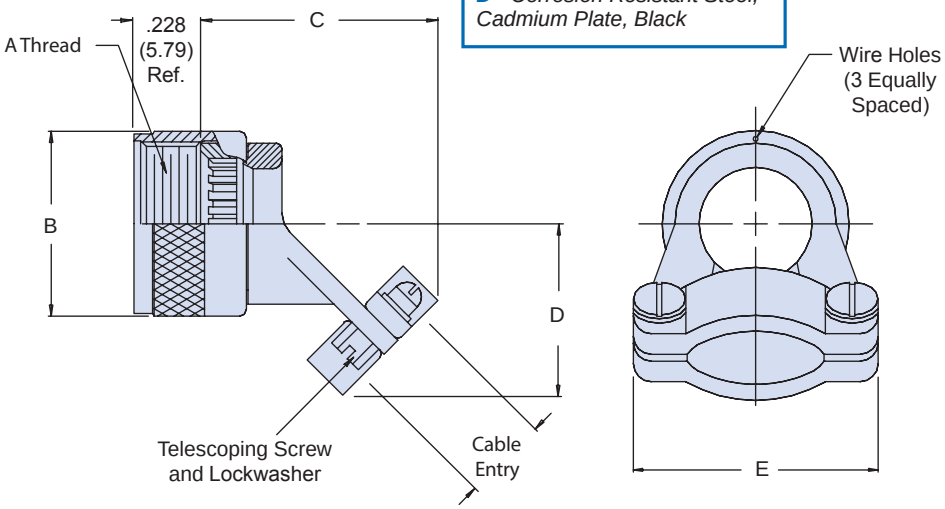

Designator	A Thread Class 2B	B Max. Diameter	C Max.	D Max.	E Max.	Screw Size Ref.	Cable Entry	
							Min.	Max.
A (11)	.750-20 UNEF	1.028 (26.11)	1.091 (27.71)	.929 (23.60)	.903 (22.94)	.114-40	.177 (4.50)	.286 (7.26)
B (13)	.875-20 UNEF	1.141 (28.98)	1.091 (27.71)	.929 (23.60)	.977 (24.82)	.114-40	.177 (4.50)	.286 (7.26)
C (15)	1.000-20 UNEF	1.263 (32.08)	1.091 (27.71)	1.056 (26.82)	1.151 (29.24)	.114-40	.250 (6.35)	.416 (10.57)
D (17)	1.125-18 UNEF	1.387 (35.23)	1.206 (30.63)	1.233 (31.32)	1.281 (32.54)	.114-40	.291 (7.39)	.476 (12.09)
E (19)	1.250-18 UNEF	1.513 (38.43)	1.320 (33.53)	1.296 (32.92)	1.406 (35.71)	.114-40	.348 (8.84)	.626 (15.90)
F (23)	1.438-18 UNEF	1.703 (43.26)	1.445 (36.70)	1.358 (34.49)	1.576 (40.03)	.134-32	.429 (10.90)	.831 (21.11)
G (25)	1.562-18 UNEF	1.825 (46.36)	1.570 (39.88)	1.420 (36.07)	1.666 (42.32)	.134-32	.523 (13.28)	.956 (24.28)
H (29)	1.875-16 UN	2.143 (54.43)	1.721 (43.71)	1.634 (41.50)	2.046 (51.97)	.134-32	.643 (16.33)	1.081 (27.46)
J (33)	2.062-16 UNS	2.329 (59.16)	1.908 (48.46)	1.859 (47.22)	2.209 (56.11)	.162-32	.704 (17.88)	1.187 (30.15)

© 2013 Glenair, Inc. CAGE Code 06324 Printed in U.S.A.

M28840/4
Metal Core Conduit

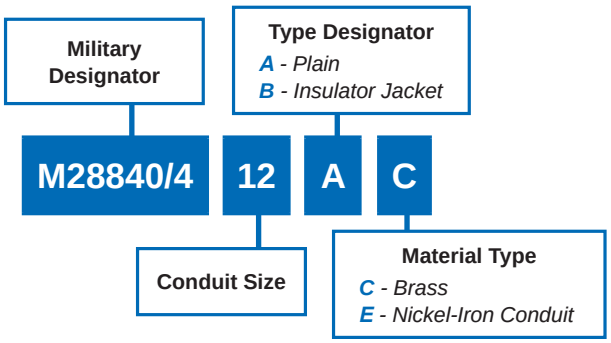

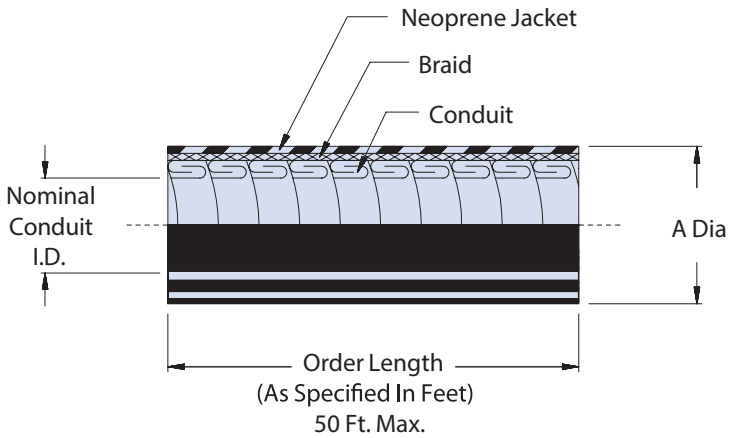

Size	Nominal Conduit Inside Diameter	A Diameter Over Shield ± .010 (0.25)	L	B Diameter Max Over Jacket
03	.375 (9.52)	.525 (13.34)	50 ft. Max.	.688 (17.47)
04	.500 (12.70)	.650 (16.51)		.812 (20.62)
05	.625 (15.87)	.765 (19.43)		.937 (23.79)
06	.750 (19.05)	.925 (23.50)		1.078 (27.38)
08	1.00 (25.40)	1.210 (30.73)		1.437 (36.49)
10	1.25 (31.75)	1.455 (36.96)		1.695 (43.05)
12	1.500 (38.10)	1.725 (43.82)		1.956 (49.68)
16	2.000 (50.80)	2.200 (55.88)		2.469 (62.71)

© 2013 Glenair, Inc. CAGE Code 06324 Printed in U.S.A.

M28840/5
Backshell for Metal Core Conduit

Material Type
W - Aluminum, Cadmium Plate, O.D. over Electroless Nickel
D - Corrosion Resistant Steel, Cadmium Plate, Black

Military Designator | **Dash Number**

M28840/5 16 W A

Designator Type
A - EMI, Non-Environmental
B - EMI, Environmental

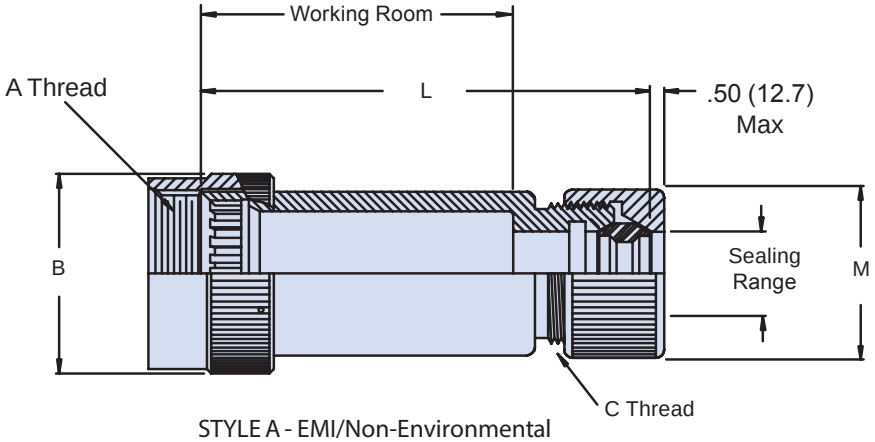

STYLE A - EMI/Non-Environmental
(Plain Conduit)

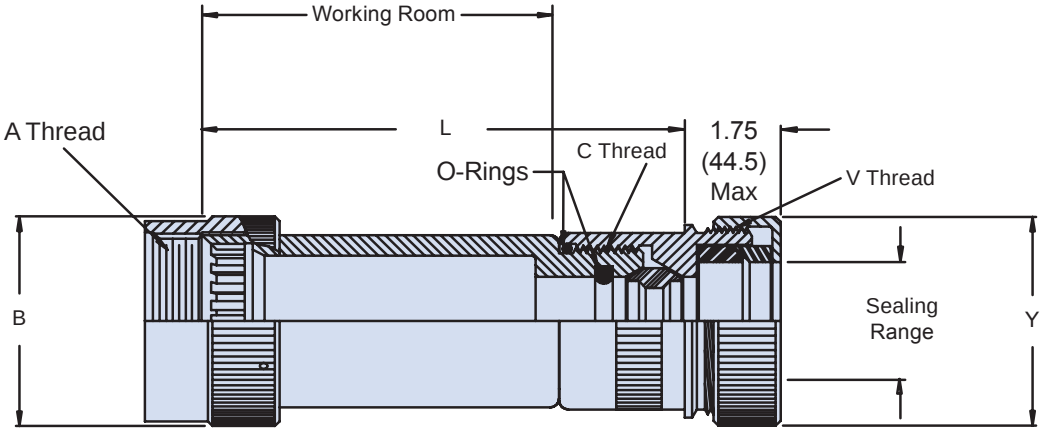

STYLE B - EMI/Environmental
(Jacket Conduit)

© 2013 Glenair, Inc. CAGE Code 06324 Printed in U.S.A.

M28840/5
Backshell for Metal Core Conduit

Glenair®

Dash Number	Designator	Conduit Size	L ± .12 (± 3.05)	Working Room Ref.	V Thread Class 2*	M Max. Diameter	Y Max. Diameter
01	A (11)	03	1.75 (44.45)	1.00 (25.4)	1.00-20 UNEF	1.12 (28.45)	1.19 (30.23)
02	B (13)						
03		04			1.188-18 UNEF	1.25 (31.8)	1.38 (35.1)
04	C (15)	03			1.000-20 UNEF	1.12 (28.5)	1.19 (30.23)
05		04			1.188-30 UNEF	1.25 (31.8)	1.38 (35.1)
06		05			1.438-18 UNEF	1.43 (36.3)	1.63 (41.4)
07		06	3.00 (76.2)		1.750-18 UNS	1.62 (41.2)	1.94 (49.3)
08	D (17)	05	2.25 (57.15)	1.50 (38.10)	1.438-18 UNEF	1.43 (36.3)	1.63 (41.4)
09		06			1.750-18 UNS	1.62 (41.2)	1.94 (49.3)
10		08		2.00 (50.80)	2.00-18 UNS	1.81 (46.0)	2.19 (55.6)
11	E (19)	05		1.50 (38.10)	1.438-18 UNEF	1.43 (36.3)	1.63 (41.4)
12		06			1.750-18 UNEF	1.62 (41.2)	1.94 (49.3)
13		08			2.00-18 UNS	1.81 (46.2)	2.19 (55.6)
14	F (23)	06	2.75 (69.85)	2.00 (50.80)	1.750-18 UNS	1.62 (41.2)	1.94 (49.3)
15		08			2.00-18 UN	1.81 (46.0)	2.19 (55.6)
16		10	3.50 (88.90)		2.00-16 UN	2.18 (55.4)	2.44 (62.0)
17	G (25)	06	2.75 (60.85)		1.750-18 UN	1.62 (41.2)	1.94 (49.3)
18		08			2.00-18 UN	1.81 (46.0)	2.19 (55.6)
19		10			2.250-16 UN	2.18 (55.4)	2.44 (62.0)
20		12	4.00 (101.6)	2.50 (63.50)	2.500-16 UN	2.56 (65.0)	2.69 (68.3)
21	H (29)	10	3.25 (82.55)		2.250-16 UN	2.18 (55.4)	2.44 (62.0)
22		12			2.500-16 UN	2.56 (65.0)	2.66 (68.3)
23	J (33)	12				2.56 (65.0)	2.60 (88.3)
24		16			3.00-16 UN	3.06 (77.8)	3.18 (81.0)
25	A (11)	04	1.75 (44.45)	1.00 (25.4)	1.188-18 UNEF	1.75 (31.75)	1.38 (35.0)

© 2013 Glenair, Inc.

GLENAIR, INC. • 1211 AIR WAY • GLENDALE, CA 91201-2497 • 818-247-6000 • FAX 818-500-9912
www.glenair.com E-Mail: sales@glenair.com

M28840/5
Backshell for Metal Core Conduit

Dash Number	Designator	A Thread Class 2B	B Diameter Max.	C Thread Class 2*	Sealing Range	
					Max.	Min.
01	A (11)	.750-20 UNEF	1.028 (26.11)	.875-20 UNEF	.63 (16.0)	.50 (12.7)
02	B (13)	.875-20 UNEF	1.141 (28.98)			
03				1.000-20 UNEF	.75 (19.1)	.63 (16.0)
04	C (15)	1.000-20 UNEF	1.263 (32.08)	.875-20 UNEF	.63 (16.0)	.50 (12.7)
05				1.000-20 UNEF	.75 (19.1)	.63 (16.0)
06				1.125-18 UNEF	.88 (22.4)	.75 (19.1)
07				1.250-18 UNEF	1.00 (25.4)	.88 (22.4)
08	D (17)	1.125-18 UNEF	1.387 (35.23)	1.125-18 UNEF	.88 (22.4)	.75 (19.1)
09				1.250-18 UNEF	1.00 (25.4)	.88 (22.4)
10				1.625-18 UNEF	1.38 (35.1)	1.19 (30.2)
11	E (19)	1.250-18 UNEF	1.513 (38.43)	1.125-18 UNEF	.88 (22.4)	.75 (19.1)
12				1.250-18 UNEF	1.00 (25.4)	.88 (22.4)
13				1.625-18 UNEF	1.38 (35.1)	1.19 (30.2)
14	F (23)	1.438-18 UNEF	1.703 (45.51)	1.250-18 UNEF	1.00 (25.4)	.88 (22.4)
15				1.625-18 UNEF	1.38 (35.1)	1.19 (30.2)
16				1.875-18 UNS	1.63 (41.4)	1.44 (36.6)
17	G (25)	1.562-18 UNEF	1.825 (46.35)	1.250-18 UNEF	1.00 (25.4)	.88 (22.4)
18				1.625-18 UNEF	1.38 (35.1)	1.19 (30.2)
19				1.875-18 UNS	1.63 (41.4)	1.44 (36.6)
20				2.125-16 UN	1.88 (47.8)	1.63 (41.4)
21	H (29)	1.875-16 UN	2.143 (54.43)	1.875-18 UNS	1.63 (41.4)	1.44 (36.6)
22				2.125-16 UN	1.88 (47.8)	1.63 (41.4)
23	J (33)	2.062-16 UNS	2.329 (59.16)	2.125-16 UN	1.88 (47.8)	1.63 (41.4)
24				2.750-16 UN	2.38 (60.5)	2.13 (54.1)
25	A (11)	.750-20 UNEF	1.028 (26.11)	.875-20 UNEF	.75 (19.05)	.63 (16.00)

© 2013 Glenair, Inc.

GLENAIR, INC. • 1211 AIR WAY • GLENDALE, CA 91201-2497 • 818-247-6000 • FAX 818-500-9912
www.glenair.com
E-Mail: sales@glenair.com

M28840/6
EMI/RFI Environmental Backshell

Material and Finish

W *- Aluminum, Cadmium Plate, O.D. over Electroless Nickel*

D *- Corrosion Resistant Steel, Cadmium Plate, Black*

Military Designator | **Dash Number**

M28840/6 **16** **W** **A**

Style Designator

A *- EMI / Environmental*

B *- Environmental*

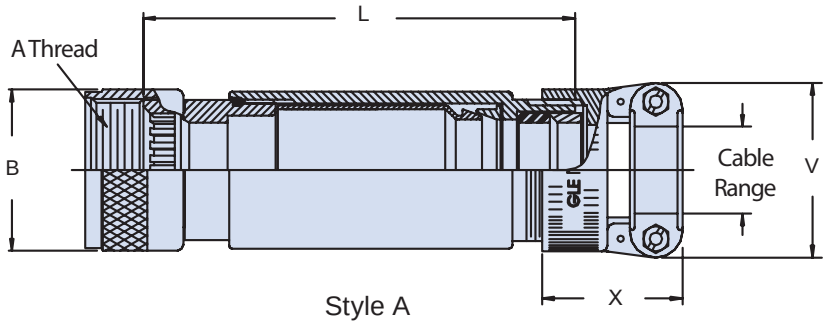

Style A

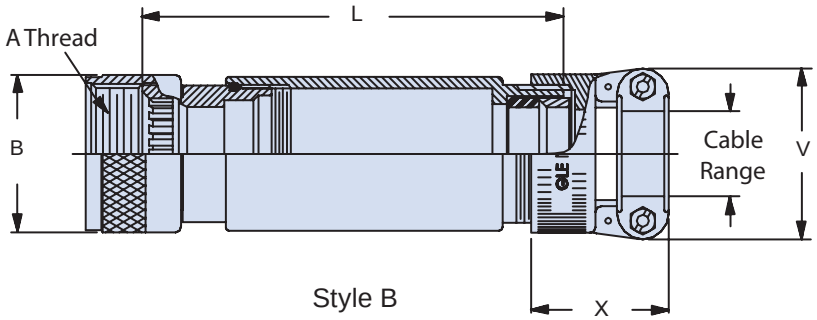

Style B

© 2013 Glenair, Inc.

M28840/6
EMI/RFI Environmental Backshell

Dash Number	Designator	A Thread Class 2B	B Diameter Max.	C Diameter Max.	D Diameter Min.	Cable Range	
						Max.	Min.
01	A (11)	.750-20 UNEF	1.028 (26.11)	1.156 (29.36)	.750 (19.05)	.312 (7.92)	.188 (4.77)
02	B (13)	.875-20 UNEF	1.141 (28.98)	1.156 (29.36)	.750 (19.05)	.312 (7.92)	.188 (4.77)
03						.438 (11.12)	.281 (7.14)
04	C (15)	1.000-20 UNEF	1.263 (32.08)	1.281 (32.54)	.875 (22.23)	.312 (7.92)	.188 (4.77)
05						.438 (11.12)	.281 (7.14)
06						.562 (14.27)	.344 (8.74)
07						.750 (19.05)	.438 (11.12)
08	D (17)	1.125-18 UNEF	1.387 (35.23)	1.406 (35.71)	1.000 (25.40)	.625 (15.87)	.375 (9.52)
09						.750 (19.05)	.375 (9.52)
10						.938 (23.82)	.438 (11.12)
11	E (19)	1.250-18 UNEF	1.513 (38.43)	1.531 (38.89)	1.125 (28.58)	.625 (15.87)	.438 (11.12)
12						.938 (23.82)	.625 (15.87)
13			1.703 (45.51)	1.656 (42.06)	1.250 (31.75)	.750 (19.05)	.375 (9.52)
14	F (23)	1.438-18 UNEF				.938 (23.82)	.625 (15.87)
15						1.188 (30.17)	.625 (15.87)
16			1.825 (46.35)	1.781 (45.24)	1.375 (34.93)	.938 (23.82)	.812 (20.62)
17	G (25)	1.562-18 UNEF				1.188 (30.17)	.875 (22.23)
18						1.250 (31.75)	1.19 (30.2)
19						1.380 (35.05)	1.000 (25.4)
20			2.143 (54.43)	2.156 (54.76)	1.750 (44.45)	1.188 (30.17)	1.63 (41.4)
21	H (29)	1.875-16 UN				1.380 (38.05)	1.44 (36.6)
22			2.329 (59.16)	2.281 (57.94)	1.875 (47.63)	1.380 (38.05)	1.63 (41.4)
23	J (33)	2.062-16 UNS				1.625 (41.28)	1.53 (41.4)
24			1.028 (26.11)	1.156 (29.36)	.750 (19.05)	.438 (11.12)	2.13 (54.1)
25	A (11)	.750-20 UNEF				.562 (14.27)	.63 (16.00)
26	B (13)	.875-30 UNEF	1.141 (28.98)	1.281 (32.54)	.875 (22.22)	.562 (14.27)	.344 (8.74)
27						.625 (15.87)	.375 (9.52)
28	C (15)	1.000-20 UNEF	1.263 (32.08)	1.406 (35.71)	1.000 (25.4)		

© 2013 Glenair, Inc.

GLENAIR, INC. • 1211 AIR WAY • GLENDALE, CA 91201-2497 • 818-247-6000 • FAX 818-500-9912
www.glenair.com
E-Mail: sales@glenair.com

M28840/6
EMI/RFI Environmental Backshell

Dash Number	Designator 1/	L ± .12 (± 3.05)	Working Room Ref.	V Thread Class 2*	X Max. Diameter	Y Max. Diameter
01	A (11)	3.62 (91.55)	2.00 (50.80)	.625-24 UNEF		.038 (23.82)
02	B (13)			.625-24 UNEF		1.125 (23.82)
03				.750-20 UNEF		
04	C (15)			.625-24 UNEF		.938 (23.82)
05				.750-20 UNEF		1.125 (28.57)
06				.875-20 UNEF		1.312 (33.32)
07		4.12 (104.65)	2.50 (63.50)	1.188-18 UNEF	1.312 (33.32)	1.593 (40.62)
08	D (17)			1.000-20 UNEF	1.281 (32.54)	1.312 (33.32)
09				1.188-19 UNEF	1.312 (33.32)	1.593 (40.62)
10				1.438-18 UNEF	1.406 (35.71)	1.750 (44.45)
11	E (19)			1.000-20 UNEF	1.281 (32.54)	1.312 (33.32)
12				1.438-18 UNEF	1.406 (35.71)	1.750 (44.45)
13		4.62 (117.35)	3.00 (76.20)	1.188-18 UNEF	1.312 (33.32)	1.593 (40.62)
14	F (23)			1.438-18 UNEF	1.406 (35.71)	1.750 (44.45)
15				1.750-18 UNS	1.593 (40.46)	2.003 (53.16)
16				1.438-18 UNEF	1.406 (35.71)	1.750 (44.45)
17	G (25)	5.12 (130.05)	3.50 (88.90)	1.750-18 UNS	1.593 (40.46)	2.093 (53.16)
18				1.750-18 UNS		2.093 (53.16)
19				2.000-18 UNS	1.625 (41.28)	2.343 (59.51)
20				1.750-18 UNS	1.593 (40.46)	2.093 (53.16)
21	H (29)			2.000-18 UNS	1.625 (41.28)	2.343 (59.51)
22				2.000-18 UNS		
23	J (33)			2.250-16 UNS	1.900 (48.26)	2.750 (69.85)
24		3.62 (91.95)	2.00 (50.80)	.750-20 UNEF	1.281 (32.54)	1.125 (28.57)
25	A (11)			.875-20 UNEF		1.312 (33.32)
26	B (13)					

© 2013 Glenair, Inc.

GLENAIR, INC. • 1211 AIR WAY • GLENDALE, CA 91201-2497 • 818-247-6000 • FAX 818-500-9912
www.glenair.com
E-Mail: sales@glenair.com

M28840/7
Dummy Stowage Receptacle

Military Designator	Shell Size	
M28840/7	B	4

Key Positions
1, 2, 3, 4, 5 and 6 Position

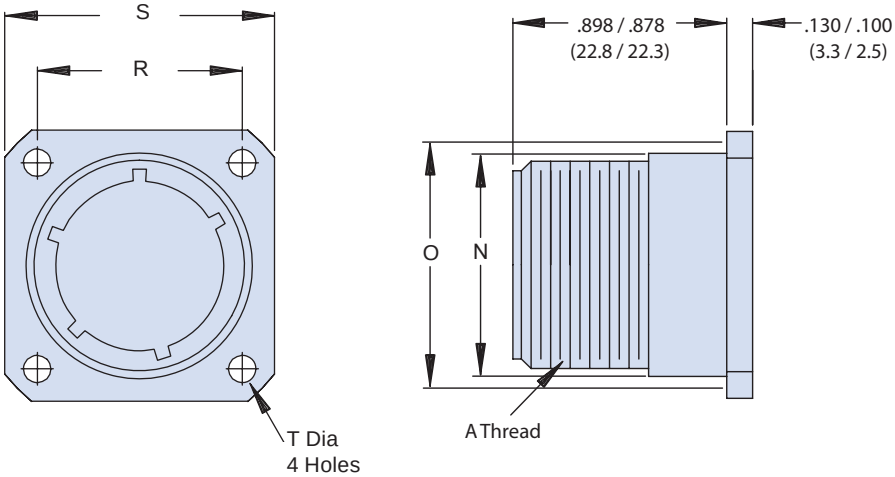

Designator	N Diameter Max.	O Reference Mating Hole	R T.P. Centerline to Centerline	S	T
A (11)	.750 (19.05)	.812 (20.62)	.750 (19.05)	1.043 (26.49) 1.003 (25.48)	.130 (3.30) .115 (2.92)
B (13)	.875 (22.22)	.937 (23.80)	.843 (21.41)	1.158 (29.41) 1.118 (28.40)	
C (15)	1.062 (26.97)	1.124 (28.55)	.968 (24.59)	1.278 (32.46) 1.238 (31.45)	
D (17)	1.125 (28.58)	1.187 (30.15)	1.015 (25.78)	1.403 (35.64) 1.363 (34.62)	
E (19)	1.312 (33.32)	1.374 (34.90)	1.140 (28.96)	1.528 (38.81) 1.488 (37.80)	
F (23)	1.500 (38.10)	1.562 (39.67)	1.281 (32.54)	1.738 (44.15) 1.698 (43.13)	
G (25)	1.625 (41.28)	1.687 (42.85)	1.392 (35.36)	1.838 (46.69) 1.798 (45.67)	.157 (3.99) .142 (3.61)
H (29)	1.812 (46.02)	1.874 (47.60)	1.568 (39.83)	2.158 (54.81) 2.118 (53.80)	
J (33)	2.000 (50.80)	2.062 (52.37)	1.734 (44.04)	2.348 (59.64) 2.308 (58.62)	.183 (4.65) .168 (4.27)

© 2013 Glenair, Inc.

GLENAIR, INC. • 1211 AIR WAY • GLENDALE, CA 91201-2497 • 818-247-6000 • FAX 818-500-9912
www.glenair.com
E-Mail: sales@glenair.com

M28840/8
90° EMI/RFI Environmental Backshell

Glenair®

Military Designator: M28840/8

Dash Number: 16

Material and Finish Designator: W

Style Designator: A

Material and Finish Designator

W - Aluminum, Cadmium Plate, Olive Drab over Electroless Nickel

D - Corrosion Resistant Steel, Cadmium Plate, Black

Style Designator

A - EMI / Environmental

B - Environmental

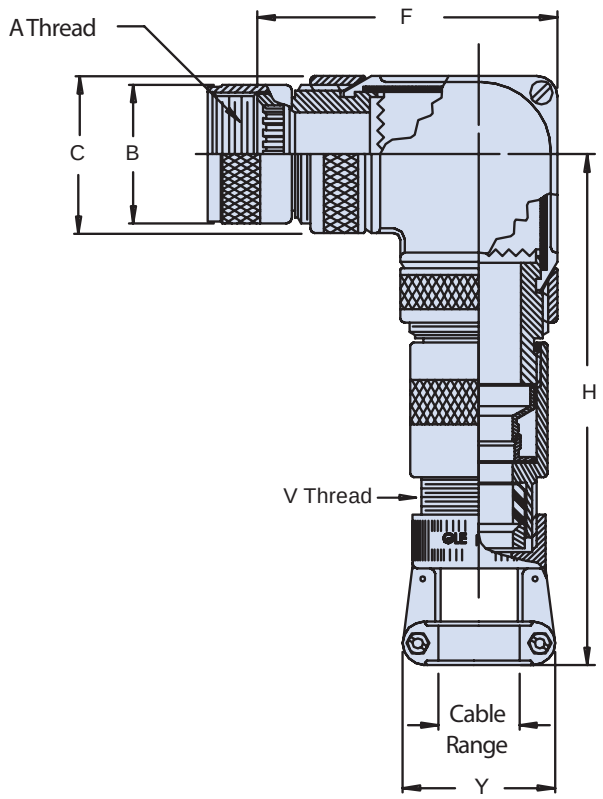

BACKSHELL STYLE A

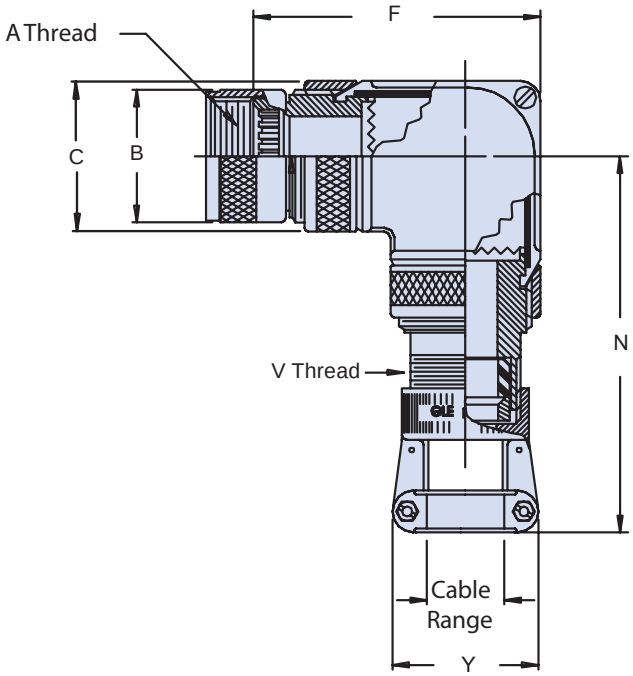

BACKSHELL STYLE B

© 2013 Glenair, Inc.

GLENAIR, INC. • 1211 AIR WAY • GLENDALE, CA 91201-2497 • 818-247-6000 • FAX 818-500-9912
www.glenair.com
E-Mail: sales@glenair.com

M28840/8
90° EMI/RFI Environmental Backshell

Backshell Size	Dash Number	Designator	A Thread Class 2B	B Max. Diameter	C Max. Diameter	D Max. Diameter
A	01	A (11)	.750-20 UNEF	1.028 (26.11)	1.188 (30.17)	1.031 (26.19)
A	02	B (13)	.875-20 UNEF	1.141 (28.98)		
B	03	B (13)				
A	04	C (15)	1.00-20 UNEF	1.263 (32.08)	1.438 (36.52)	1.156 (29.36)
B	05	C (15)				
C	06	C (15)				
D	07	C (15)			1.688 (42.87)	1.281 (32.54)
A	08	D (17)	1.125-18 UNEF	1.387 (35.23)		
B	09	D (17)				
C	10	D (17)				
A	11	E (19)	1.250-18 UNEF	1.513 (38.43)		
B	12	E (19)			1.938 (49.22)	1.406 (35.71)
A	13	F (23)	1.438-18 UNEF	1.703 (43.51)		
B	14	F (23)				
C	15	F (23)				
A	16	G (25)	1.562-18 UNEF	1.825 (46.35)		
B	17	G (25)				
C	18	G (25)			2.188 (54.43)	1.531 (38.89)
D	19	G (25)				
A	20	H (29)	1.875-16 UN	2.143 (54.43)		
B	21	H (29)				

© 2013 Glenair, Inc.

GLENAIR, INC. • 1211 AIR WAY • GLENDALE, CA 91201-2497 • 818-247-6000 • FAX 818-500-9912
www.glenair.com
E-Mail: sales@glenair.com

M28840/8
90° EMI/RFI Environmental Backshell

Backshell Size	Dash Number	Designator	Cable Range Max.	Cable Range Min.	E Max. Dim.	F Max. Dim.	V Thread Class 2
A	01	A (11)	.312 (7.92)	.188 (4.77)	1.156 (29.36)	2.614 (66.40)	.625-24 UNEF
A	02	B (13)	.312 (7.92)	.188 (4.77)			.625-24 UNEF
B	03	B (13)	.438 (11.12)	.281 (7.14)			.750-20 UNEF
A	04	C (15)	.312 (7.92)	.188 (4.77)	1.281 (32.54)	2.864 (72.75)	.625-24 UNEF
B	05	C (15)	.438 (11.12)	.281 (7.14)			.750-20 UNEF
C	06	C (15)	.562 (14.27)	.344 (8.74)			.875-20 UNEF
D	07	C (15)	.750 (19.05)	.438 (11.12)	1.406 (35.71)	3.114 (79.10)	1.188-18 UNEF
A	08	D (17)	.625 (15.87)	.375 (9.82)			1.000-20 UNEF
B	09	D (17)	.750 (19.05)	.438 (11.12)			1.188-18 UNEF
C	10	D (17)	.938 (23.82)	.625 (15.87)	1.531 (38.89)		1.438-18 UNEF
A	11	E (19)	.625 (15.87)	.375 (9.52)	1.406 (35.71)		1.00-20 UNEF
B	12	E (19)	.938 (23.82)	.625 (15.87)	1.531 (38.89)	3.364 (85.45)	1.438-18 UNEF
A	13	F (23)	.750 (19.05)	.438 (11.12)	1.406 (25.71)		1.188-18 UNEF
B	14	F (23)	.938 (23.82)	.625 (15.87)	1.531 (38.89)		1.438-18 UNEF
C	15	F (23)	1.188 (30.17)	.812 (20.62)	1.781 (45.24)		1.750-18 UNEF
A	16	G (25)	.938 (23.82)	.625 (15.87)	1.531 (38.89)		1.438-18 UNEF
B	17	G (25)	1.188 (30.17)	.812 (20.62)	1.781 (45.24)		1.750-18 UNS
C	18	G (25)	1.250 (31.75)	.875 (22.23)		3.614 (91.80)	
D	19	G (25)	1.380 (35.05)	1.000 (25.40)	2.156 (54.76)		2.000-16 UNS
A	20	H (29)	1.188 (30.17)	.812 (20.62)	1.781 (45.24)		1.750-18 UNS
B	21	H (29)	1.380 (35.05)	1.000 (25.40)	2.156 (54.76)		2.000-18 UNS

© 2013 Glenair, Inc.

GLENAIR, INC. • 1211 AIR WAY • GLENDALE, CA 91201-2497 • 818-247-6000 • FAX 818-500-9912
www.glenair.com E-Mail: sales@glenair.com

M28840/8
90° EMI/RFI Environmental Backshell

Backshell Size	Dash Number	Designator	X Ref. Dimension	Y Ref. Dimension	H Max. Style A	N Max. Style B
A	01	A (11)	1.281 (32.54)	.938 (23.82)	5.332 (134.43)	2.962 (75.23)
A	02	B (13)		.938 (23.82)	5.332 (134.43)	2.962 (75.23)
B	03	B (13)		1.125 (28.57)	5.332 (134.43)	2.962 (75.23)
A	04	C (15)		.938 (23.82)	5.457 (138.61)	3.087 (78.41)
B	05	C (15)		1.125 (28.57)	5.457 (138.61)	3.087 (78.41)
C	06	C (15)		1.312 (33.32)	5.457 (138.61)	3.087 (78.41)
D	07	C (15)		1.593 (40.62)	5.682 (144.32)	3.312 (84.12)
A	08	D (17)		1.312 (33.32)	5.682 (144.32)	3.312 (84.12)
B	09	D (17)	1.312 (33.32)	1.593 (40.62)	5.713 (145.11)	3.343 (84.91)
C	10	D (17)	1.406 (35.71)	1.750 (44.45)	5.807 (147.50)	3.437 (87.30)
A	11	E (19)	1.281 (32.54)	1.312 (33.32)	5.682 (144.32)	3.312 (84.12)
B	12	E (19)	1.406 (35.71)	1.750 (44.45)	5.832 (148.13)	3.462 (87.93)
A	13	F (23)	1.312 (33.32)	1.593 (40.62)	5.738 (145.28)	3.368 (85.55)
B	14	F (23)	1.406 (35.71)	1.750 (44.45)	5.832 (148.13)	3.462 (87.93)
C	15	F (23)	1.593 (40.46)	2.093 (53.16)	6.019 (152.88)	3.649 (92.68)
A	16	G (25)	1.406 (35.71)	1.750 (44.45)	5.832 (148.13)	3.462 (87.93)
B	17	G (25)	1.593 (40.46)	2.093 (53.16)	6.019 (152.88)	3.649 (92.68)
C	18	G (25)	1.593 (40.46)	2.093 (53.16)	6.144 (156.06)	3.774 (95.86)
D	19	G (25)	1.625 (41.28)	2.343 (59.51)	6.176 (156.87)	3.806 (96.62)
A	20	H (29)	1.593 (40.46)	2.093 (53.16)	6.144 (156.06)	3.774 (95.86)
B	21	H (29)	1.625 (41.28)	2.343 (59.51)	6.176 (156.87)	3.806 (96.62)

© 2013 Glenair, Inc.

M28840/8
90° EMI/RFI Environmental Backshell

Backshell Size	Dash Number	Designator	A Thread Class 2B	B Max. Diameter	C Max. Diameter	D Max. Diameter
A	22	J (33)	2.062-16 UNS	2.329 (59.16)	2.688 (68.26)	1.781 (45.24)
A	23	J (33)				
B	24	A (11)	.750-20 UNEF	1.028 (26.11)	1.188 (30.17)	1.031 (26.19)
C	25	A (11)			1.438 (36.52)	1.156 (29.36)
C	26	B (13)	.875-20 UNEF	1.141 (28.98)		
D	27	B (13)			1.688 (42.87)	1.281 (32.54)
E	28	C (15)	1.000-20 UNEF	1.263 (32.08)		

Backshell Size	Dash Number	Designator	Cable Range Max.	Cable Range Min.	E Max. Dimensions	F Max. Dimensions	V Thread Class 2
A	22	J (33)	1.380 (35.05)	1.000 (25.40)	2.281 (57.94)	4.114 (104.50)	2.000-18 UNS
A	23	J (33)	1.625 (41.26)	1.250 (31.75)			2.250-16 UNS
B	24	A (11)	.438 (11.12)	.281 (7.14)	1.156 (29.36)	2.614 (66.40)	.750-20 UNEF
C	25	A (11)	.562 (14.27)	.344 (8.74)	1.281 (32.54)	2.864 (72.75)	.875-20 UNEF
C	26	B (13)	.562 (14.27)	.344 (8.74)			
D	27	B (13)	.625 (15.87)	.375 (9.52)	1.406 (35.71)	3.114 (79.10)	1.000-20 UNEF
E	28	C (15)	.625 (15.87)	.375 (9.50)			

Backshell Size	Dash Number	Designator	X Ref. Dimensions	Y Ref. Dimensions	H Max. Style A	N Max. Style B
A	22	J (33)	1.625 (41.28)	2.343 (59.51)	6.426 (163.22)	4.056 (103.02)
A	23	J (33)	1.900 (48.26)	2.750 (59.85)	6.701 (170.21)	4.33 (110.01)
B	24	A (11)	1.281 (32.54)	1.125 (28.57)	5.332 (135.43)	2.962 (75.23)
C	25	A (11)		1.312 (33.32)	5.457 (138.61)	3.087 (78.41)
C	26	B (13)			5.457 (138.61)	3.087 (78.41)
C	27	B (13)			5.682 (144.32)	3.312 (84.12)
B	28	C (15)			5.682 (144.32)	3.312 (84.12)

© 2013 Glenair, Inc.

GLENAIR, INC. • 1211 AIR WAY • GLENDALE, CA 91201-2497 • 818-247-6000 • FAX 818-500-9912
www.glenair.com E-Mail: sales@glenair.com

M28840/9
45° EMI/RFI Environmental Backshell

Military Designator	Dash Number		Style Designator
M28840/9	16	W	A

Style Designator
- ***A*** *- EMI / Environmental*
- ***B*** *- Environmental*

Material and Finish Designator
- ***W*** *- Aluminum, Cadmium Plate, Olive Drab over Electroless Nickel*
- ***D*** *- Corrosion Resistant Steel, Cadmium Plate, Black*

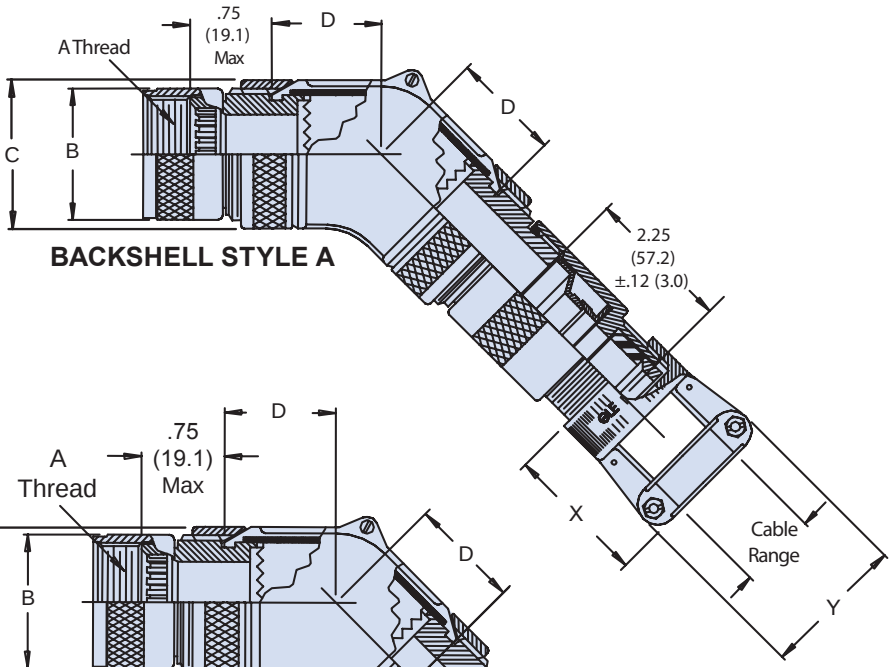

BACKSHELL STYLE A

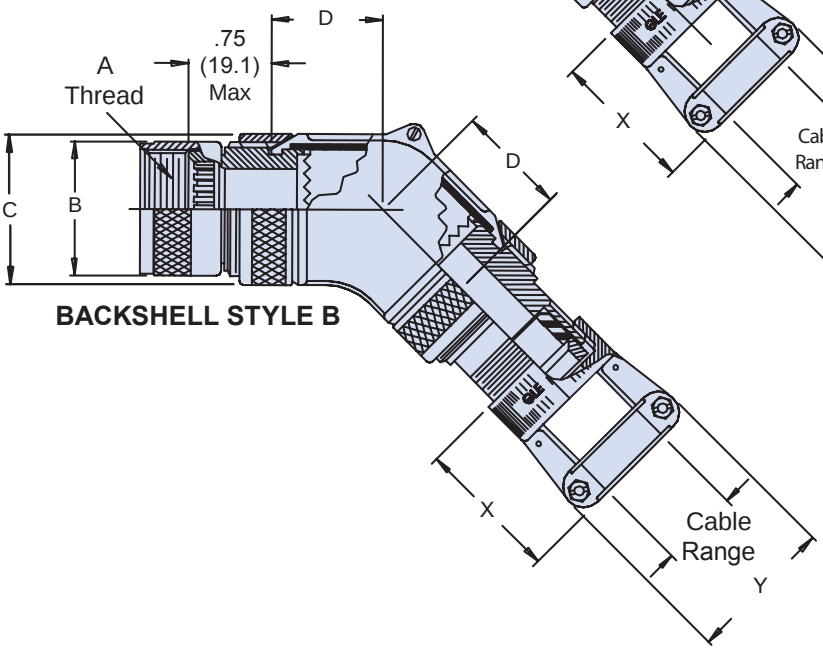

BACKSHELL STYLE B

© 2013 Glenair, Inc.
CAGE Code 06324
Printed in U.S.A.

M28840/9
45° EMI/RFI Environmental Backshell

Backshell Size	Dash Number	Designator	A Thread	B Max. Diameter	C Max. Diameter	D Max.
A	01	A (11)	.750-20 UNEF	1.028 (26.11)	1.031 (26.19)	1.031 (26.19)
A	02	B (13)	.875-20 UNEF	1.141 (28.98)		
B	03	B (13)				
A	04	C (15)	1.00-20 UNEF	1.263 (32.08)	1.281 (32.54)	1.156 (29.36)
B	05	C (15)				
C	06	C (15)				
D	07	C (15)			1.513 (38.89)	1.281 (32.54)
A	08	D (17)	1.125-18 UNEF	1.387 (35.23)		
B	09	D (17)				
C	10	D (17)				
A	11	E (19)	1.250-18 UNEF	1.513 (38.43)		
B	12	E (19)			1.781 (45.24)	1.406 (35.71)
A	13	F (23)	1.438-18 UNEF	1.703 (43.51)		
B	14	F (23)				
C	15	F (23)				
A	16	G (25)	1.562-18 UNEF	1.825 (46.35)		
B	17	G (25)				
C	18	G (25)			2.031 (51.59)	1.531 (38.89)
D	19	G (25)				
A	20	H (29)	1.875-16 UN	2.143 (54.43)		
B	21	H (29)				

© 2013 Glenair, Inc.

GLENAIR, INC. • 1211 AIR WAY • GLENDALE, CA 91201-2497 • 818-247-6000 • FAX 818-500-9912
www.glenair.com
E-Mail: sales@glenair.com

M28840/9
45° EMI/RFI Environmental Backshell

Backshell Size	Dash Number	Designator	Cable Range		E Max. Dim.	F Max. Style A	H Max. Style B
			Max.	Min.			
A	01	A (11)	.312 (7.92)	.188 (4.77)	1.156 (29.36)	5.879 (149.33)	4.199 (106.65)
A	02	B (13)	.312 (7.92)	.188 (4.77)		5.879 (149.33)	4.199 (106.65)
B	03	B (13)	.438 (11.12)	.281 (7.14)		5.932 (150.67)	4.252 (108.00)
A	04	C (15)	.312 (7.92)	.188 (4.77)	1.281 (32.54)	6.092 (154.74)	4.412 (112.06)
B	05	C (15)	.438 (11.12)	.281 (7.14)		6.146 (156.11)	4.466 (113.44)
C	06	C (15)	.562 (14.27)	.344 (8.74)		6.202 (157.53)	4.522 (114.86)
D	07	C (15)	.750 (19.05)	.438 (11.12)	1.406 (35.71)	6.533 (165.94)	4.853 (123.27)
A	08	D (17)	.625 (15.87)	.375 (9.82)		6.413 (1626.89)	4.733 (120.22)
B	09	D (17)	.750 (19.05)	.438 (11.12)		6.533 (165.94)	4.853 (123.27)
C	10	D (17)	.938 (23.82)	.625 (15.87)	1.531 (38.89)	6.636 (168.55)	4.956 (125.88)
A	11	E (19)	.625 (15.87)	.375 (9.52)	1.406 (35.71)	6.413 (162.89)	4.733 (120.22)
B	12	E (19)	.938 (23.82)	.625 (15.87)	1.531 (38.89)	6.846 (173.89)	5.166 (131.22)
A	13	F (23)	.750 (19.05)	.438 (11.12)	1.406 (25.71)	6.747 (171.37)	5.067 (128.70)
B	14	F (23)	.938 (23.82)	.625 (15.87)	1.531 (38.89)	6.846 (173.89)	5.166 (131.22)
C	15	F (23)	1.188 (30.17)	.812 (20.62)	1.781 (45.24)	7.103 (180.42)	5.423 (138.23)
A	16	G (25)	.938 (23.82)	.625 (15.87)	1.531 (38.89)	6.846 (173.89)	5.156 (130.96)
B	17	G (25)	1.188 (30.17)	.812 (20.62)	1.781 (45.24)	7.103 (180.42)	5.4239 (138.23)
C	18	G (25)	1.250 (31.75)	.875 (22.23)		7.316 (185.83)	5.636 (143.15)
D	19	G (25)	1.380 (35.05)	1.000 (25.40)	2.156 (54.76)	7.425 (188.60)	5.745 (145.92)
A	20	H (29)	1.188 (30.17)	.812 (20.62)	1.781 (45.24)	7.316 (185.83)	5.636 (143.15)
B	21	H (29)	1.380 (35.05)	1.000 (25.40)	2.156 (54.76)	7.425 (188.60)	5.745 (145.92)

© 2013 Glenair, Inc.

GLENAIR, INC. • 1211 AIR WAY • GLENDALE, CA 91201-2497 • 818-247-6000 • FAX 818-500-9912
www.glenair.com
E-Mail: sales@glenair.com

M28840/9
45° EMI/RFI Environmental Backshell

Backshell Size	Dash Number	Designator	V Thread Class	X Ref. Dimension	Y Ref. Dimension
A	01	A (11)	.625-24 UNEF	1.281 (32.54)	.938 (23.82)
A	02	B (13)	.625-24 UNEF		.938 (23.82)
B	03	B (13)	.750-20 UNEF		1.125 (28.57)
A	04	C (15)	.625-24 UNEF		.938 (23.82)
B	05	C (15)	.750-20 UNEF		1.125 (28.57)
C	06	C (15)	.875-20 UNEF		1.312 (33.32)
D	07	C (15)	1.188-18 UNEF	1.312 (33.32)	1.593 (40.62)
A	08	D (17)	1.000-20 UNEF	1.281 (32.54)	1.312 (33.32)
B	09	D (17)	1.188-18 UNEF	1.312 (33.32)	1.593 (40.62)
C	10	D (17)	1.438-18 UNEF	1.406 (35.71)	1.750 (44.45)
A	11	E (19)	1.000-20 UNEF	1.281 (32.54)	1.312 (33.32)
B	12	E (19)	1.438-18 UNEF	1.406 (35.71)	1.750 (44.45)
A	13	F (23)	1.188-18 UNEF	1.312 (33.32)	1.593 (40.62)
B	14	F (23)	1.438-18 UNEF	1.406 (35.71)	1.750 (44.45)
C	15	F (23)	1.750-18 UNS	1.593 (40.46)	2.093 (53.16)
A	16	G (25)	1.438-18 UNEF	1.406 (35.71)	1.750 (44.45)
B	17	G (25)	1.750-18 UNS	1.593 (40.46)	2.093 (53.16)
C	18	G (25)	1.750-18 UNS	1.593 (40.46)	2.093 (53.16)
D	19	G (25)	2.000-16 UNS	1.625 (41.28)	2.343 (59.51)
A	20	H (29)	1.750-18 UNS	1.593 (40.46)	2.093 (53.16)
B	21	H (29)	2.000-18 UNS	1.625 (41.28)	2.343 (59.51)

© 2013 Glenair, Inc.

GLENAIR, INC. • 1211 AIR WAY • GLENDALE, CA 91201-2497 • 818-247-6000 • FAX 818-500-9912
www.glenair.com E-Mail: sales@glenair.com

M28840/9
45° EMI/RFI Environmental Backshell

Backshell Size	Dash Number	Designator	A Thread	B Max. Diameter	C Max. Diameter	D Max.
A	22	J (33)	2.062-16 UNEF	2.329 (59.16)	2.531 (64.29)	1.781 (45.24)
B	23	J (33)				
B	24	A (11)	.750-20 UNEF	1.028 (26.11)	1.031 (26.19)	1.031 (26.19)
C	25	A (11)			1.281 (32.54)	1.156 (29.36)
C	26	B (13)	.875-20 UNEF	1.141 (28.98)	1.281 (32.54)	1.156 (29.36)
D	27	B (13)			1.531 (38.99)	1.281 (32.54)
E	28	C (15)	1.000-20 UNEF	1.263 (32.08)		

Backshell Size	Dash Number	Designator	Cable Range Max.	Cable Range Min.	E Max. Dimension	F Max. Style A	H Max. Style B
A	22	J (33)	1.380 (35.05)	1.000 (25.40)	2.281 (57.94)	7.852 (199.44)	6.127 (156.77)
B	23	J (33)	1.625 (41.28)	1.250 (31.75)		6.454 (163.93)	6.454 (163.93)
B	24	A (11)	.438 (11.12)	.281 (7.14)	1.156 (29.36)	5.932 (150.67)	4.252 (108.00)
C	25	A (11)	.562 (14.27)	.344 (8.74)	1.281 (32.54)	6.202 (157.53)	4.522 (114.86)
C	26	B (13)	.562 (14.27)	.344 (8.74)	1.281 (32.54)	6.202 (157.53)	4.522 (114.86)
D	27	B (13)	.625 (15.87)	.375 (9.52)	1.406	6.413 (162.89)	4.733 (120.22)
E	28	C (15)	.625 (15.87)	.375 (9.50)		6.413 (162.89)	4.733 (120.22)

Backshell Size	Dash Number	Designator	V Thread Class	X Ref. Dimension	Y Ref. Dimension
A	22	J (33)	2.000-18 UNS	1.625 (41.28)	2.343 (59.51)
B	23	J (33)	2.250-16 UNS	1.900 (48.26)	2.750 (69.85)
B	24	A (11)	.750-20 UNEF	1.281 (32.54)	1.125 (28.57)
C	25	A (11)	.875-20 UNEF		1.312 (33.32)
C	26	B (13)	.875-20 UNEF		
D	27	B (13)	1.000-20 UNEF		
E	28	C (15)	1.000-20 UNEF		

© 2013 Glenair, Inc.

GLENAIR, INC. • 1211 AIR WAY • GLENDALE, CA 91201-2497 • 818-247-6000 • FAX 818-500-9912
www.glenair.com
E-Mail: sales@glenair.com

M28840/10
Wall Mount Receptacle Connector

Glenair®

Military Designator — M28840/10

Shell Size — G

Contact Style — *P, S, F, G, D or E* — P

Material and Finish — A

- ***A*** *- Class D: Aluminum, Cadmium Plate, O.D. over Electroless Nickel*
- ***B*** *- Class DS: Corrosion Resistant Steel, Cadmium Plate, Black*

Insert Arrangement — 1

Key Position — *1, 2, 3, 4, 5 and 6* — 1

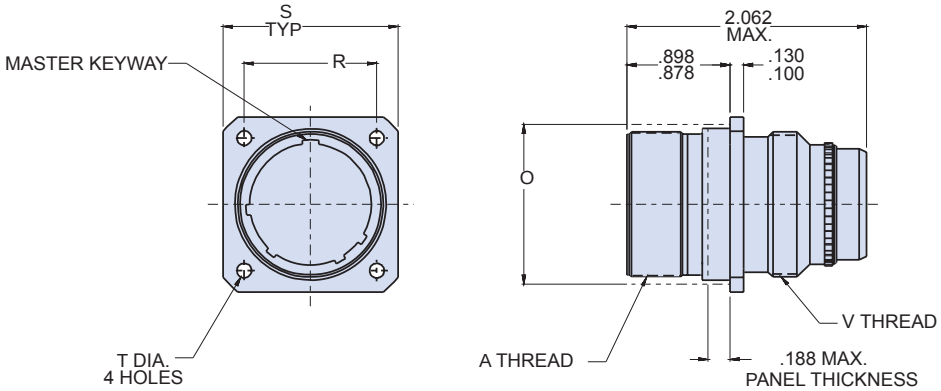

Military Shell Size	Shell Size	A Thread Class 2A	V Thread Class 2A	0 Ref. Mtg. Hole	R True Position ℄ to ℄	S	T Diameter
A	11	.750-.1P-.2L-D.S.	.750-20 UNEF	.812 (20.62)	.750 (19.05)	1.043 (26.49) 1.003 (25.48)	.130 (3.30) .115 (2.92)
B	13	.875-.1P-.2L-D.S.	.875-20 UNEF	.937 (23.80)	.843 (21.41)	1.158 (29.41) 1.118 (28.40)	
C	15	1.062-.1P-.2L-D.S.	1.000-20 UNEF	1.124 (28.55)	.968 (24.59)	1.278 (32.46) 1.238 (31.45)	
D	17	1.125-.1P-.2L-D.S.	1.125-18 UNEF	1.187 (30.15)	1.015 (25.78)	1.403 (35.64) 1.363 (34.62)	
E	19	1.312-.1P-.2L-D.S.	1.250-18 UNEF	1.374 (34.90)	1.140 (28.96)	1.528 (38.81) 1.488 (37.80)	
F	23	1.500-.1P-.2L-D.S.	1.437-18 UNEF	1.562 (39.67)	1.281 (32.54)	1.738 (44.15) 1.698 (43.13)	
G	25	1.625-.1P-.2L-D.S.	1.562-18 UNEF	1.687 (42.85)	1.392 (35.36)	1.838 (46.69) 1.798 (45.67)	.157 (3.99) .142 (3.61)
H	29	1.812-.1P-.2L-D.S.	1.875-16 UN	1.874 (47.60)	1.568 (39.83)	2.158 (54.81) 2.118 (53.80)	
J	33	2.000-.1P-.2L-D.S.	2.062-16 UNS	2.062 (52.37)	1.734 (44.04)	2.348 (59.64) 2.308 (58.62)	.183 (4.65) .168 (4.27)

© 2013 Glenair, Inc. CAGE Code 06324 Printed in U.S.A.

M28840/11
In-Line Receptacle Connector

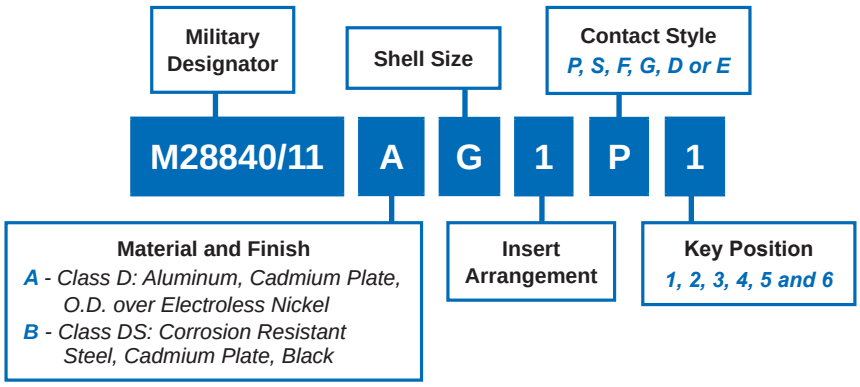

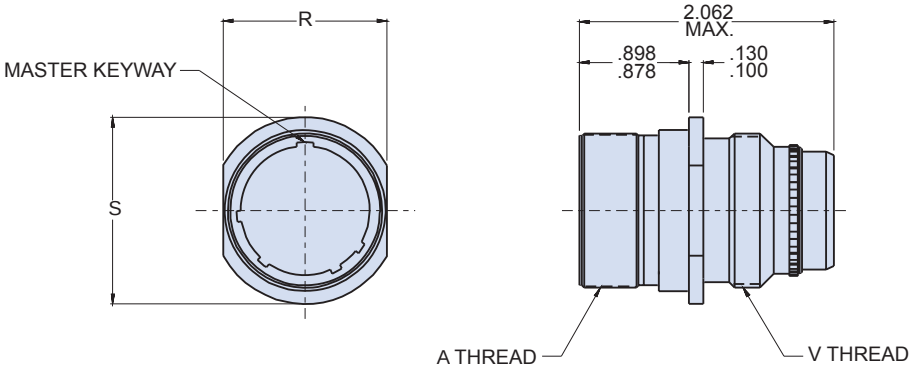

Military Shell Size	Shell Size	A Thread Class 2A	V Thread Class 2A	R	S Diameter
A	11	.750-.1P-.2L-D.S.	.750-20 UNEF	.768 (19.51) .758 (19.25)	.963 (24.46) .943 (23.95)
B	13	.875-.1P-.2L-D.S.	.875-20 UNEF	.893 (22.68) .883 (22.43)	1.088 (27.63) 1.063 (27.13)
C	15	1.062-.1P-.2L-D.S.	1.000-20 UNEF	1.080 (27.43) 1.070 (27.18)	1.275 (32.38) 1.255 (31.88)
D	17	1.125-.1P-.2L-D.S.	1.125-18 UNEF	1.143 (29.03) 1.133 (28.78)	1.338 (33.98) 1.318 (33.48)
E	19	1.312-.1P-.2L-D.S.	1.250-18 UNEF	1.330 (33.78) 1.320 (33.53)	1.525 (38.74) 1.505 (38.23)
F	23	1.500-.1P-.2L-D.S.	1.437-18 UNEF	1.518 (38.56) 1.508 (38.30)	1.713 (43.51) 1.693 (43.00)
G	25	1.625-.1P-.2L-D.S.	1.562-18 UNEF	1.643 (41.73) 1.633 (41.48)	1.838 (46.09) 1.818 (46.18)
H	29	1.812-.1P-.2L-D.S.	1.875-16 UN	1.893 (48.08) 1.883 (47.83)	2.088 (53.04) 2.068 (52.53)
J	33	2.000-.1P-.2L-D.S.	2.062-16 UNS	2.080 (52.83) 2.070 (52.58)	2.275 (57.78) 2.255 (57.28)

© 2013 Glenair, Inc.

GLENAIR, INC. • 1211 AIR WAY • GLENDALE, CA 91201-2497 • 818-247-6000 • FAX 818-500-9912
www.glenair.com
E-Mail: sales@glenair.com

M28840/12
Box Mount Receptacle Connector

Glenair®

Military Designator	Figure		Shell Size		Contact Style	
M28840/12	A	2	G	1	P	1

Material and Finish
A - Class D: Aluminum, Cadmium Plate, O.D. over Electroless Nickel
B - Class DS: Corrosion Resistant Steel, Cadmium Plate, Black

Insert Arrangement

Key Position
1, 2, 3, 4, 5 and 6

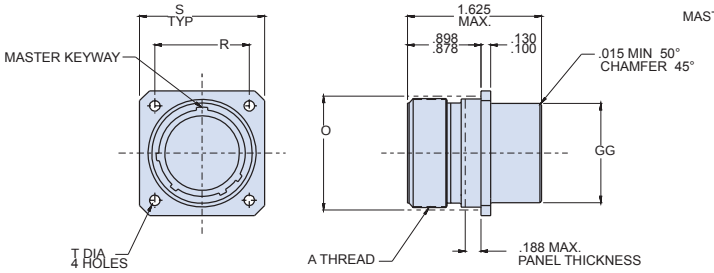

FIGURE 1

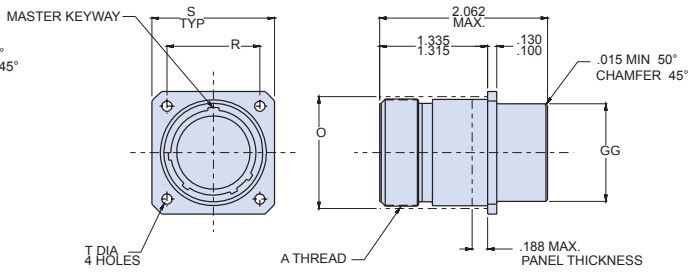

FIGURE 2

Designator	N Diameter Max	O Reference Mating Hole	R True Position Centerline to Centerline	S	T	GG Diameter Max.
A (11)	.750 (19.05)	.812 (20.62)	.750 (19.05)	1.043 (26.49) 1.003 (25.48)	.130 (3.30) .115 (2.92)	.758 (19.25)
B (13)	.875 (22.22)	.937 (23.80)	.843 (21.41)	1.158 (29.41) 1.118 (28.40)		.880 (22.35)
C (15)	1.062 (26.97)	1.124 (28.55)	.968 (24.59)	1.278 (32.46) 1.238 (31.45)		1.005 (25.53)
D (17)	1.125 (28.58)	1.187 (30.15)	1.015 (25.78)	1.403 (35.64) 1.363 (34.62)		1.130 (28.70)
E (19)	1.312 (33.32)	1.374 (34.90)	1.140 (28.96)	1.528 (38.81) 1.488 (37.80)		1.255 (31.88)
F (23)	1.500 (38.10)	1.562 (39.67)	1.281 (32.54)	1.738 (44.15) 1.698 (43.13)		1.443 (36.65)
G (25)	1.625 (41.28)	1.687 (42.85)	1.392 (35.36)	1.838 (46.69) 1.798 (45.67)	.157 (3.99) .142 (3.61)	1.567 (39.80)
H (29)	1.812 (46.02)	1.874 (47.60)	1.568 (39.83)	2.158 (54.81) 2.118 (53.80)		1.880 (47.75)
J (33)	2.000 (50.80)	2.062 (52.37)	1.734 (44.04)	2.343 (59.64) 2.308 (58.62)	.183 (4.65) .168 (4.27)	2.067 (52.50)

© 2013 Glenair, Inc. CAGE Code 06324 Printed in U.S.A.

M28840/13
Protective Receptacle Cover

Military Designator — M28840/13

Shell Size Designator — H

Chain Attachment Style
- *A - Link Chain with Fastener*
- *B - Link Chain with Ring for Jam-Nut Mounting Receptacle*
- *C - Link Chain with Ring for Cable-Connecting Receptacle*

A

Material and Finish
- *W - Aluminum, Cadmium Plate, O.D. over Electroless Nickel*
- *D - Corrosion Resistant Steel, Cadmium Plate, Black*

W

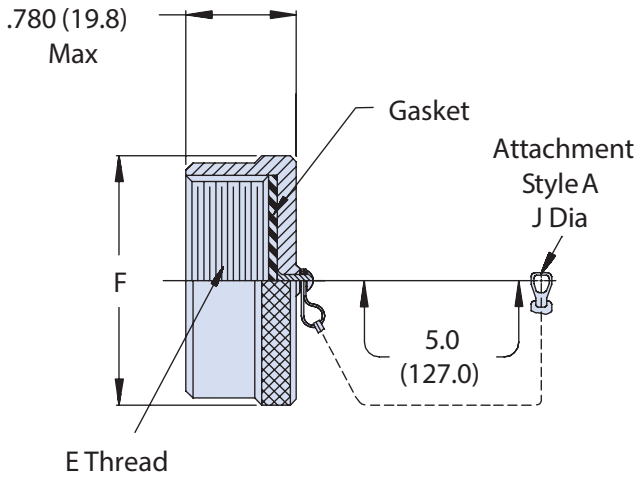

M28840/13 Receptacle Cover

Designator	E Thread Class 2A	F Max. Diameter	H ± .010 (± .25)	J Dia ± .005 (± .13)	G ± .005 (± .13)
A (11)	.750-.1P-.2L-D.S.	1.028 (26.21)	.890 (22.61)	.130 (3.30)	.765 (19.43)
B (13)	.875-.1P-.2L-D.S.	1.141 (23.98)	1.015 (25.78)		.890 (22.61)
C (15)	1.062-.1P-.2L-D.S.	1.263 (32.08)	1.203 (30.56)		1.015 (25.78)
D (17)	1.125-.1P-.2L-D.S.	1.387 (35.23)	1.265 (32.13)		1.140 (28.96)
E (19)	1.312-.1P-.2L-D.S.	1.513 (38.43)	1.453 (36.91)		1.265 (32.13)
F (23)	1.500-.1P-.2L-D.S.	1.703 (43.51)	1.640 (41.66)		1.453 (36.91)
G (25)	1.625-.1P-.2L-D.S.	1.825 (46.35)	1.765 (44.83)	.156 (3.96)	1.577 (40.06)
H (29)	1.812-.1P-.2L-D.S.	2.143 (54.43)	1.953 (49.61)		1.890 (48.01)
J (33)	2.000-.1P-.2L-D.S.	2.329 (59.16)	2.140 (54.36)	.193 (4.90)	2.077 (52.76)

© 2013 Glenair, Inc. CAGE Code 06324 Printed in U.S.A.

M28840/14
Jam Nut Mount Receptacle Connector

Glenair®

Material and Finish
A - Class D: Aluminum, Cadmium Plate, O.D. over Electroless Nickel
B - Class DS: Corrosion Resistant Steel, Cadmium Plate, Black

Key Position
1, 2, 3, 4, 5 and 6

Insert Arrangement

M28840/14	A	G	1	P	1
Military Designator	Shell Size		Contact Style *P, S, F, G, D or E*		

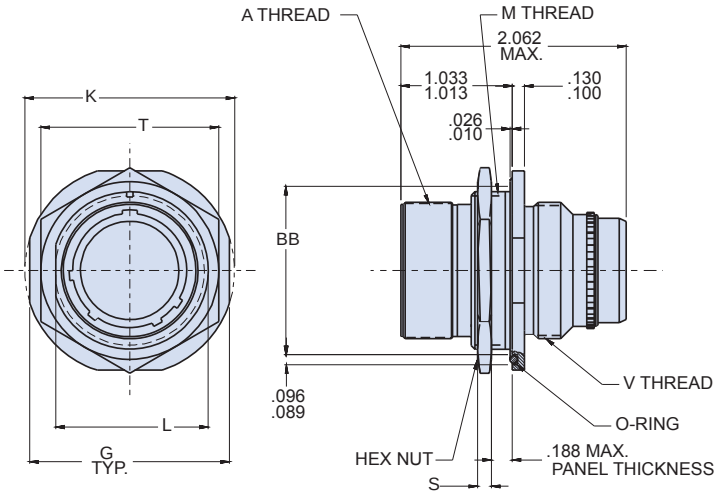

Desig-nator	BB	G	K	L Across Flat	M Thread Class 2A	N Max.	P	R Max.	S Hex Nut Thickness	T ±.017 (0.43)
A (11)	.979 (24.87) .969 (24.61)	1.274 (32.36) 1.254 (31.85)	1.368 (34.75) 1.348 (34.24)	.841 (21.36) .832 (21.13)	7/8-20 UNEF	.750 (19.05)	.890 (22.61) .880 (22.35)	.875 (22.22)	.125 (3.17)	1.062 (26.97)
B (13)	1.104 (28.04) 1.094 (27.79)	1.399 (35.53) 1.379 (35.03)	1.508 (38.30) 1.488 (37.80)	.966 (24.54) .957 (24.31)	1-20 UNEF	.875 (22.22)	1.015 (24.78) 1.005 (25.53)	1.000 (25.40)		1.188 (30.18)
C (15)	1.292 (32.82) 1.282 (32.56)	1.587 (40.31) 1.567 (39.80)	1.681 (42.70) 1.661 (42.19)	1.156 (29.29) 1.144 (29.06)	1 3/16-18 UNEF	1.062 (26.97)	1.203 (30.56) 1.193 (30.30)	1.188 (30.18)		1.375 (34.93)
D (17)	1.354 (34.39) 1.344 (34.14)	1.649 (41.88) 1.629 (41.38)	1.743 (44.27) 1.723 (43.76)	1.216 (30.89) 1.207 (30.66)	1 1/4-18 UNEF	1.125 (28.58)	1.265 (32.13) 1.255 (31.88)	1.250 (31.75)		1.438 (36.53)
E (19)	1.542 (39.17) 1.532 (38.91)	1.837 (46.66) 1.817 (46.15)	1.931 (49.05) 1.911 (48.54)	1.403 (35.64) 1.394 (35.41)	1 7/16-18 UNEF	1.312 (33.32)	1.453 (36.91) 1.443 (36.65)	1.438 (36.52)		1.625 (41.28)
F (23)	1.729 (43.92) 1.718 (43.66)	2.024 (51.41) 2.004 (50.90)	2.118 (53.80) 2.098 (53.29)	1.591 (40.41) 1.582 (40.18)	1 5/8-18 UNEF	1.500 (38.10)	1.640 (41.66) 1.630 (41.40)	1.625 (41.28)		1.812 (46.02)
G (25)	1.854 (47.09) 1.844 (46.84)	2.149 (54.58) 2.129 (54.08)	2.243 (56.97) 2.223 (56.46)	1.716 (43.59) 1.707 (43.36)	1 3/4-18 UNS	1.625 (41.28)	1.765 (44.83) 1.755 (44.58)	1.750 (44.45)	.189 (4.8)	2.000 (50.80)
H (29)	2.042 (51.87 2.032 (51.61)	2.337 (59.36) 2.317 (58.85)	2.435 (61.85) 2.415 (61.34)	1.903 (46.34) 1.894 (48.11)	1 15/16-16 UN	1.812 (46.02)	1.953 (49.61) 1.943 (49.35)	1.938 (49.22)		2.188 (55.58)
J (33)	2.229 (56.62) 2.219 (56.36)	2.524 (64.11) 2.504 (63.60)	2.618 (66.50) 2.598 (65.99)	2.091 (53.11) 2.082 (52.88)	2 1/8-16 UN	2.000 (50.80)	2.140 (54.36) 2.130 (54.10)	2.125 (53.98)		2.375 (69.85)

© 2013 Glenair, Inc. CAGE Code 06324 Printed in U.S.A.

M28840/15
Protective Plug Cover

Military Designator

Shell Size Designator

Material and Finish
- ***W*** *- Aluminum, Cadmium Plate, O.D. over Electroless Nickel*
- ***D*** *- Corrosion Resistant Steel, Cadmium Plate, Black*

M28840/15 H A W

Chain Attachment Style
- ***A*** *- Link Chain with Fastener*
- ***B*** *- Link Chain with Ring for Jam-Nut Mounting Receptacle*

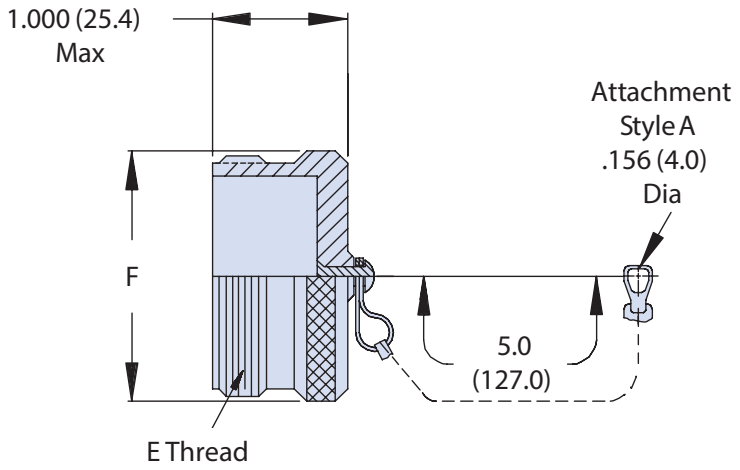

M28840/15 Plug Cover

Designator	E Thread Class 2B	F Max. Diameter
A (11)	.750-1P-.2L-DS	1.028 (26.21)
B (13)	.875-1P-.2L-DS	1.141 (28.98)
C (15)	1.062-1P-.2L-DS	1.263 (32.08)
D (17)	1.125-1P-.2L-DS	1.387 (35.23)
E (19)	1.312-1P-.2L-DS	1.108 (28.14)
F (23)	1.500-1P-.2L-DS	1.293 (32.84)
G (25)	1.625-1P-.2L-DS	1.454 (36.93)
H (29)	1.812-1P-.2L-DS	1.620 (41.15)
J (33)	2.000-1P-.2L-DS	1.812 (46.02)

© 2013 Glenair, Inc.

GLENAIR, INC. • 1211 AIR WAY • GLENDALE, CA 91201-2497 • 818-247-6000 • FAX 818-500-9912
www.glenair.com
E-Mail: sales@glenair.com

M28840/16
Plug Connector

Glenair®

Military Designator	Shell Size		Contact Style *P, S, F, G, D or E*	
M28840/16	A	G	1	P	1

Material and Finish
A - Class D: Aluminum, Cadmium Plate, O.D. over Electroless Nickel
B - Class DS: Corrosion Resistant Steel, Cadmium Plate, Black

Insert Arrangement

Key Position
1, 2, 3, 4, 5 and 6

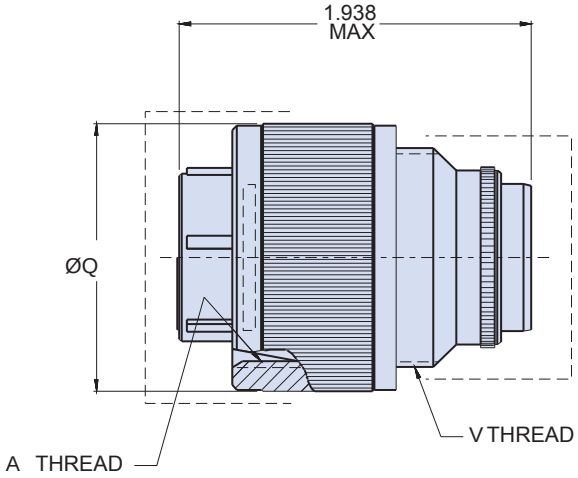

Designator	A Thread Class 2B	V Thread Class 2A	Ø Q Max.
A (11)	.750-1P-.2L-DS	3/4-20 UNEF	1.028 (26.11)
B (13)	.875-1P-.2L-DS	7/8-20 UNEF	1.141 (28.98)
C (15)	1.062-1P-.2L-DS	1-20 UNEF	1.263 (32.08)
D (17)	1.125-1P-.2L-DS	1 1/8-18 UNEF	1.387 (35.23)
E (19)	1.312-1P-.2L-DS	1 1/4-18 UNEF	1.513 (38.43)
F (23)	1.500-1P-.2L-DS	1 7/16-18 UNEF	1.703 (43.26)
G (25)	1.625-1P-.2L-DS	1 9/16-18 UNEF	1.825 (46.36)
H (29)	1.812-1P-.2L-DS	1 7/8-16 UN	2.143 (54.43)
J (33)	2.000-1P-.2L-DS	2 1/16-16 UNS	2.329 (59.16)

© 2013 Glenair, Inc.

GLENAIR, INC. • 1211 AIR WAY • GLENDALE, CA 91201-2497 • 818-247-6000 • FAX 818-500-9912
www.glenair.com
E-Mail: sales@glenair.com

M28840/17
Plug Connector with Straight Strain Relief

Military Designator — M28840/17

Shell Size — A

Material and Finish
- *A - Class D: Aluminum, Cadmium Plate, O.D. over Electroless Nickel*
- *B - Class DS: Corrosion Resistant Steel, Cadmium Plate, Black*

Insert Arrangement — G 1

Contact Style — *P, S, F, G, D or E* — P

Key Position — *1, 2, 3, 4, 5 and 6* — 1

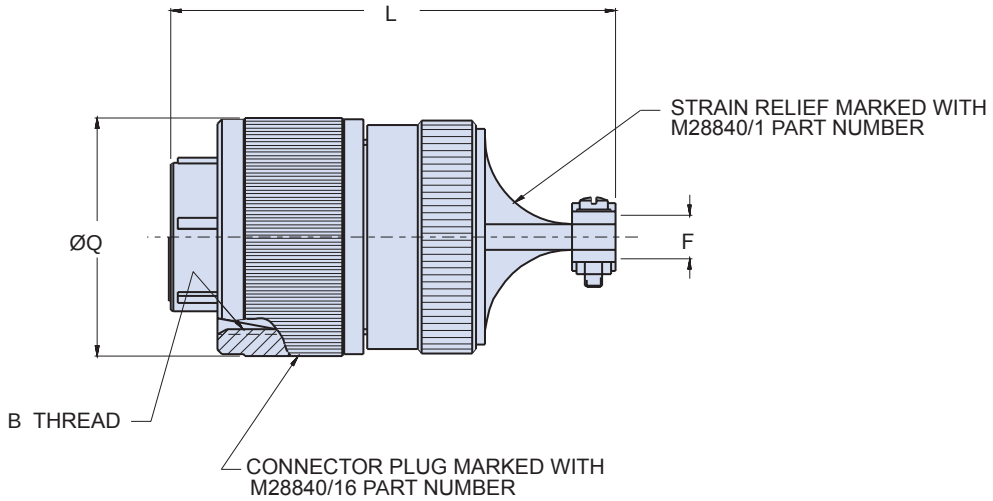

Designator	B Thread Class 2B	F Cable Entry Open	F Cable Entry Closed	L Max.	Q Max.	Max. O.D. Over Rear Clamps
A (11)	.750-1P-.2L-DS	.286	.177	2.438	1.028	.832
B (13)	.875-1P-.2L-DS	.286			1.141	
C (15)	1.062-1P-.2L-DS	.416	.250		1.263	.989
D (17)	1.125-1P-.2L-DS	.476	.291	2.688	1.387	1.094
E (19)	1.312-1P-.2L-DS	.626	.348	2.812	1.513	1.319
F (23)	1.500-1P-.2L-DS	.831	.429	2.938	1.703	1.557
G (25)	1.625-1P-.2L-DS	.956	.523	3.062	1.825	1.653
H (29)	1.812-1P-.2L-DS	1.081	.643	3.188	2.143	1.819
J (33)	2.000-1P-.2L-DS	1.187	.704	3.375	2.329	2.020

© 2013 Glenair, Inc. CAGE Code 06324 Printed in U.S.A.

M28840/18
Plug Connector with 90° Strain Relief

Military Designator — M28840/18

Shell Size — G

Contact Style — *P, S, F, G, D or E* — P

Material and Finish — A

- ***A*** *- Class D: Aluminum, Cadmium Plate, O.D. over Electroless Nickel*
- ***B*** *- Class DS: Corrosion Resistant Steel, Cadmium Plate, Black*

Insert Arrangement — 1

Key Position — *1, 2, 3, 4, 5 and 6* — 1

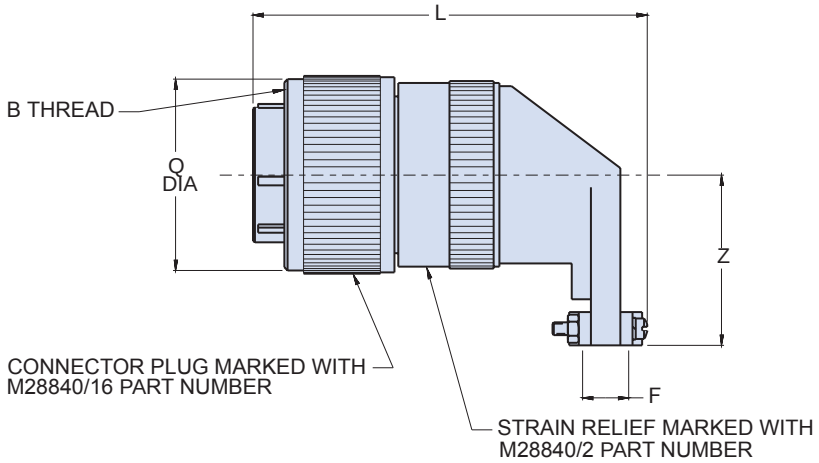

Designator	B Thread Class 2B	F Cable Entry Open	F Cable Entry Closed	L Max.	Q Max.	Z Max.	Max. O.D. Over Rear Clamps
A (11)	.750-1P-.2L-DS	.286	.177	2.562	1.028	.929	.832
B (13)	.875-1P-.2L-DS	.286		2.562	1.141	.929	
C (15)	1.062-1P-.2L-DS	.416	.250	2.750	1.263	1.056	.989
D (17)	1.125-1P-.2L-DS	.476	.291	2.875	1.387	1.233	1.094
E (19)	1.312-1P-.2L-DS	.626	.348	3.000	1.513	1.296	1.319
F (23)	1.500-1P-.2L-DS	.831	.429	3.125	1.703	1.358	1.557
G (25)	1.625-1P-.2L-DS	.956	.523	3.250	1.825	1.420	1.653
H (29)	1.812-1P-.2L-DS	1.081	.643	3.375	2.143	1.634	1.819
J (33)	2.000-1P-.2L-DS	1.187	.704	3.438	2.329	1.859	2.020

© 2013 Glenair, Inc.

GLENAIR, INC. • 1211 AIR WAY • GLENDALE, CA 91201-2497 • 818-247-6000 • FAX 818-500-9912
www.glenair.com
E-Mail: sales@glenair.com

M28840/19
Plug Connector with 45° Strain Relief

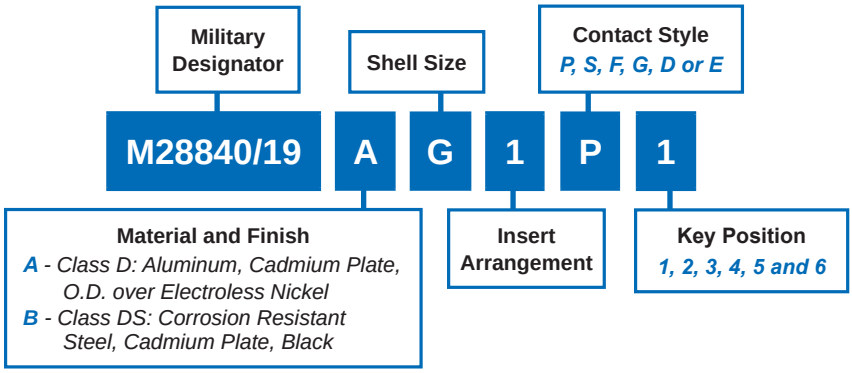

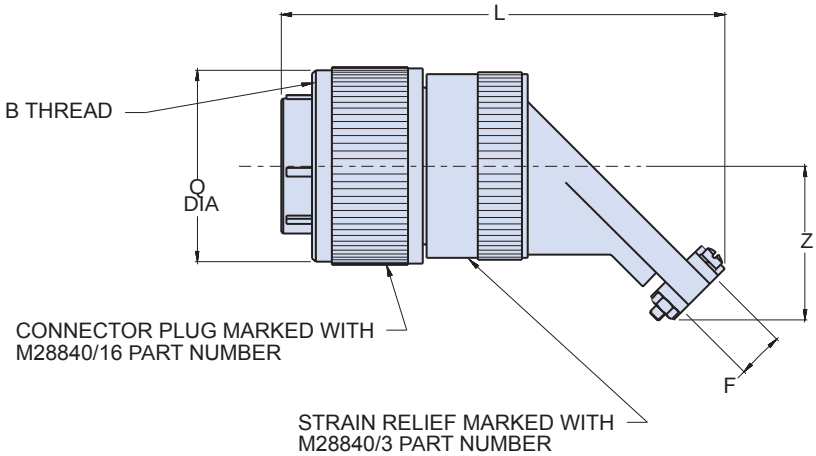

Designator	B Thread Class 2B	F Cable Entry Open	F Cable Entry Closed	L Max.	Q Max.	Z Max.	Max. O.D. Over Rear Clamps
A (11)	.750-1P-.2L-DS	.286	.177	3.125	1.028	.928	.832
B (13)	.875-1P-.2L-DS	.286		3.125	1.141	.928	
C (15)	1.062-1P-.2L-DS	.416	.250	3.250	1.263	.991	.989
D (17)	1.125-1P-.2L-DS	.476	.291	3.312	1.387	1.110	1.094
E (19)	1.312-1P-.2L-DS	.626	.348	3.375	1.513	1.172	1.319
F (23)	1.500-1P-.2L-DS	.831	.429	3.438	1.703	1.235	1.557
G (25)	1.625-1P-.2L-DS	.956	.523	3.500	1.825	1.297	1.653
H (29)	1.812-1P-.2L-DS	1.081	.643	3.750	2.143	1.543	1.819
J (33)	2.000-1P-.2L-DS	1.187	.704	3.875	2.329	1.668	2.020

© 2013 Glenair, Inc.

GLENAIR, INC. • 1211 AIR WAY • GLENDALE, CA 91201-2497 • 818-247-6000 • FAX 818-500-9912
www.glenair.com
E-Mail: sales@glenair.com

M28840/20
Receptacle Connector with Straight EMI/RFI Backshell

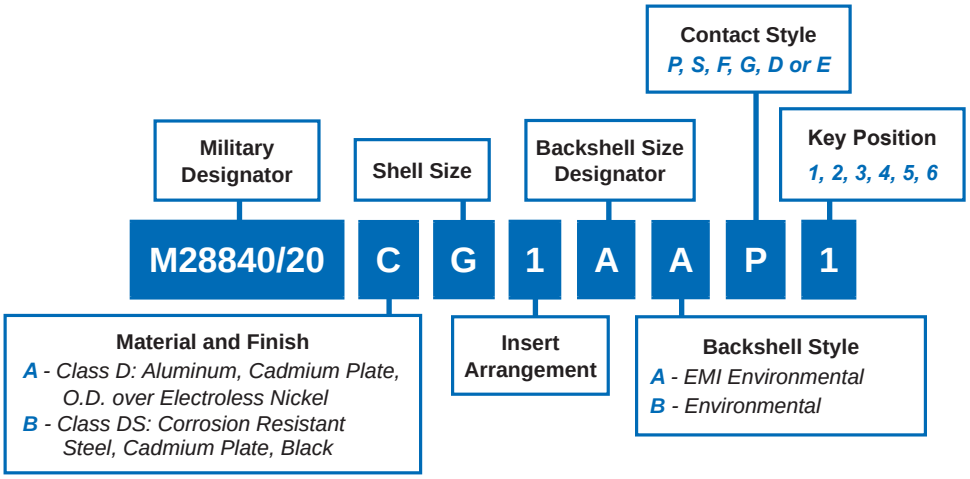

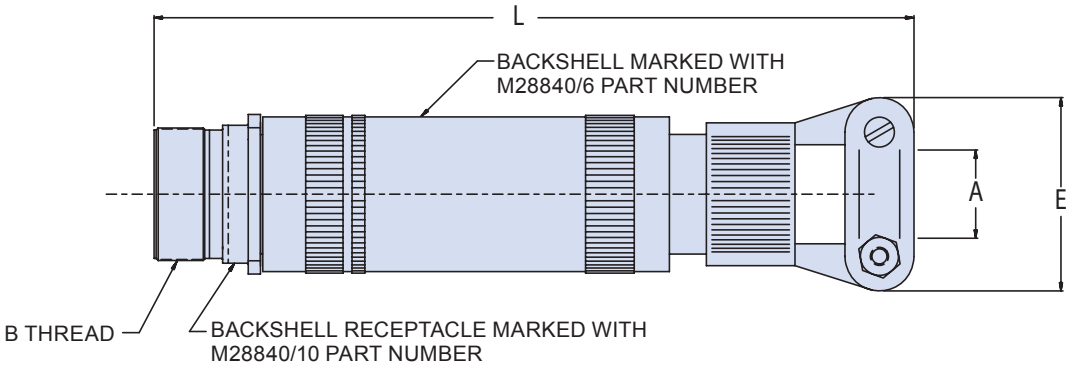

© 2013 Glenair, Inc.

GLENAIR, INC. • 1211 AIR WAY • GLENDALE, CA 91201-2497 • 818-247-6000 • FAX 818-500-9912
www.glenair.com
E-Mail: sales@glenair.com

M28840/20 Receptacle Connector with Straight EMI/RFI Backshell

JMilitary Shell Size	Shell Size	Backshell Size Designator	A Cable Entry		B Thread Class 2B	E Max.	L Max.
			Open	Closed			
A	11	A	.312	.188	.750-1P-.2L-DS	.938	6.625
A	11	B	.438	.281		1.125	6.625
A	11	C	.562	.344		1.312	6.625
B	13	A	.312	.188	.875-1P-.2L-DS	.938	6.625
B	13	B	.438	.281		1.125	6.625
B	13	C	.562	.344		1.312	6.625
B	13	D	.652	.375		1.312	7.125
C	15	A	.438	.281	1.062-1P-.2L-DS	1.125	6.625
C	15	B	.562	.344		1.312	6.625
C	15	C	.625	.375		1.312	7.125
C	15	D	.750	.438		1.593	7.188
C	15	E	.312	.188		.938	6.625
D	17	A	.625	.375	1.125-1P-.2L-DS	1.312	7.125
D	17	B	.750	.438		1.593	7.188
D	17	C	.938	.625		1.750	7.188
E	19	A	.625	.375	1.312-1P-.2L-DS	1.312	7.125
E	19	B	.938	.625		1.750	7.250
F	23	A	.750	.438	1.500-1P-.2L-DS	1.593	7.688
F	23	B	.938	.625		1.750	7.812
F	23	C	1.188	.812		2.093	7.938
G	25	A	.938	.625	1.625-1P-.2L-DS	1.750	7.750
G	25	B	1.188	.812		2.093	8.438
G	25	C	1.250	.875		2.093	8.438
G	25	D	1.380	1.000		2.343	8.500
H	29	A	1.188	.812	1.812-1P-.2L-DS	2.093	8.438
H	29	B	1.380	1.000		2.343	8.500
J	33	A	1.380	1.000	2.000-1P-.2L-DS	2.343	8.500
J	33	B	1.625	1.250		2.750	8.750

© 2013 Glenair, Inc.

GLENAIR, INC. • 1211 AIR WAY • GLENDALE, CA 91201-2497 • 818-247-6000 • FAX 818-500-9912
www.glenair.com
E-Mail: sales@glenair.com

M28840/21
In-Line Receptacle Connector with Straight EMI/RFI Backshell

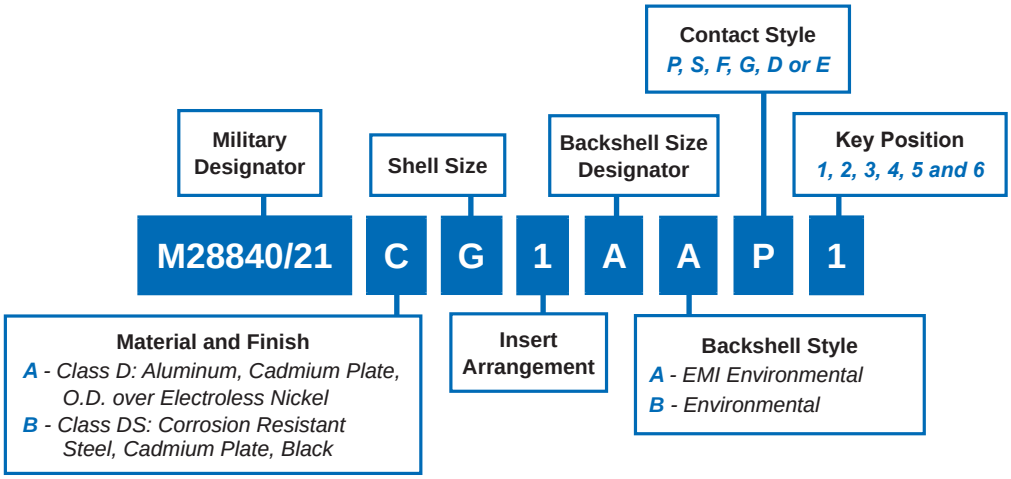

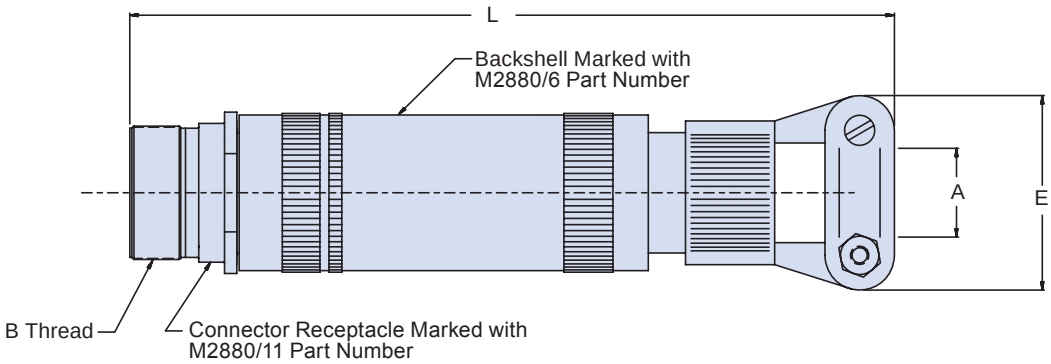

© 2013 Glenair, Inc.

GLENAIR, INC. • 1211 AIR WAY • GLENDALE, CA 91201-2497 • 818-247-6000 • FAX 818-500-9912
www.glenair.com
E-Mail: sales@glenair.com

M28840/21
In-Line Receptacle Connector with Straight EMI/RFI Backshell

JMilitary Shell Size	Shell Size	Backshell Size Designator	A Cable Entry		B Thread Class 2B	E Max.	L Max.
			Open	Closed			
A	11	A	.312	.188	.750-1P-.2L-DS	.938	6.625
A	11	B	.438	.281		1.125	6.625
A	11	C	.562	.344		1.312	6.625
B	13	A	.312	.188	.875-1P-.2L-DS	.938	6.625
B	13	B	.438	.281		1.125	6.625
B	13	C	.562	.344		1.312	6.625
B	13	D	.652	.375		1.312	7.125
C	15	A	.438	.281	1.062-1P-.2L-DS	1.125	6.625
C	15	B	.562	.344		1.312	6.625
C	15	C	.625	.375		1.312	7.125
C	15	D	.750	.438		1.593	7.188
C	15	E	.312	.188		.938	6.625
D	17	A	.625	.375	1.125-1P-.2L-DS	1.312	7.125
D	17	B	.750	.438		1.593	7.188
D	17	C	.938	.625		1.750	7.188
E	19	A	.625	.375	1.312-1P-.2L-DS	1.312	7.125
E	19	B	.938	.625		1.750	7.250
F	23	A	.750	.438	1.500-1P-.2L-DS	1.593	7.688
F	23	B	.938	.625		1.750	7.812
F	23	C	1.188	.812		2.093	7.938
G	25	A	.938	.625	1.625-1P-.2L-DS	1.750	7.750
G	25	B	1.188	.812		2.093	8.438
G	25	C	1.250	.875		2.093	8.438
G	25	D	1.380	1.000		2.343	8.500
H	29	A	1.188	.812	1.812-1P-.2L-DS	2.093	8.438
H	29	B	1.380	1.000		2.343	8.500
J	33	A	1.380	1.000	2.000-1P-.2L-DS	2.343	8.500
J	33	B	1.625	1.250		2.750	8.750

© 2013 Glenair, Inc.

M28840/22
Metal Conduit Bushing

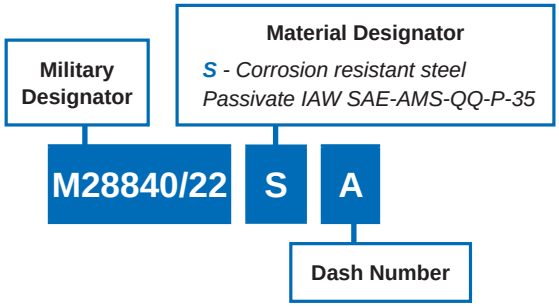

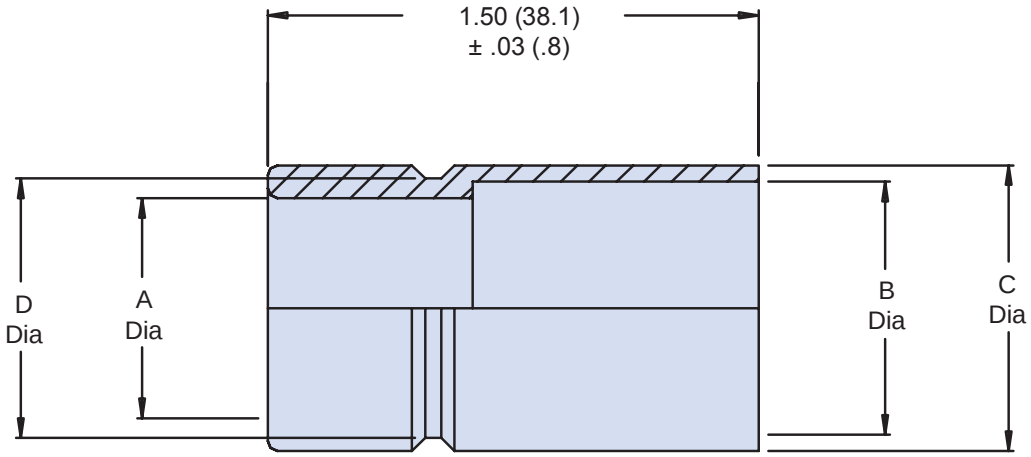

Size	MIL-DTL-28840/04 Size Ref.	A +.020 (.50) -.000 (.000)	B +.005 (.12) -.000 (.000)	C +.000 (.000) -.005 (.12)	D +.000 (.000) -.005 (.12)
03	03	.375 (9.53)	.540 (13.71)	.625 (15.87)	.525 (13.34)
04	04	.500 (12.70)	.665 (16.89)	.750 (19.05)	.650 (16.51)
05	05	.625 (15.87)	.780 (19.81)	.875 (22.23)	.775 (19.69)
06	06	.750 (19.05)	.940 (23.88)	1.000 (25.40)	.900 (22.86)
08	08	1.000 (25.40)	1.225 (31.12)	1.375 (34.93)	1.275 (32.39)
10	10	1.250 (31.75)	1.470 (37.34)	1.625 (41.28)	1.525 (38.74)
12	12	1.500 (38.10)	1.740 (44.20)	1.875 (47.65)	1.775 (45.09)
16	16	2.000 (50.80)	2.215 (56.26)	2.375 (60.33)	2.275 (57.79)

© 2013 Glenair, Inc.

GLENAIR, INC. • 1211 AIR WAY • GLENDALE, CA 91201-2497 • 818-247-6000 • FAX 818-500-9912
www.glenair.com
E-Mail: sales@glenair.com

M28840/23 "E Nut"

Military Designator	Size	
M28840/23	J	W

Material and Finish

W - Aluminum, Cadmium Plate, O.D. over Electroless Nickel

D - Corrosion Resistant Steel, Cadmium Plate, Black

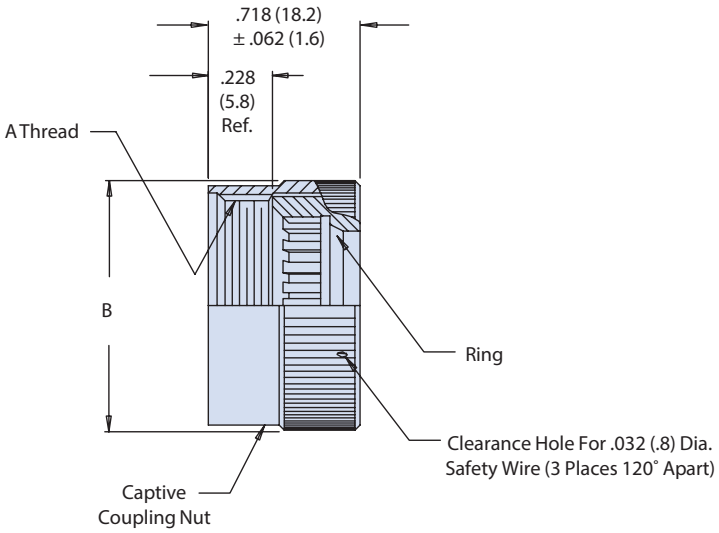

Designator	A Thread Class 2B	B Max. Diameter
A (11)	.750-20 UNEF	1.028 (26.11)
B (13)	.875-20 UNEF	1.14 (26.11)
C (15)	1.000-20 UNEF	2.263 (32.08)
D (17)	1.125-18 UNEF	1.387 (35.23)
E (19)	1.250-18 UNEF	1.513 (38.43)
F (23)	1.438-18 UNEF	1.703 (43.51)
G (25)	1.562-18 UNEF	1.825 (46.35)
H (29)	1.876-16 UN	2.143 (54.43)
J (33)	2.062-16 UNS	2.329 (59.16)

© 2013 Glenair, Inc.

GLENAIR, INC. • 1211 AIR WAY • GLENDALE, CA 91201-2497 • 818-247-6000 • FAX 818-500-9912
www.glenair.com
E-Mail: sales@glenair.com

M28840/24
Mounting Gasket

Glenair®

Military Designator	Shell Size	
M28840/24	J	A

Material and Finish Designator

A - Fluorinated Silicone
B - EMI

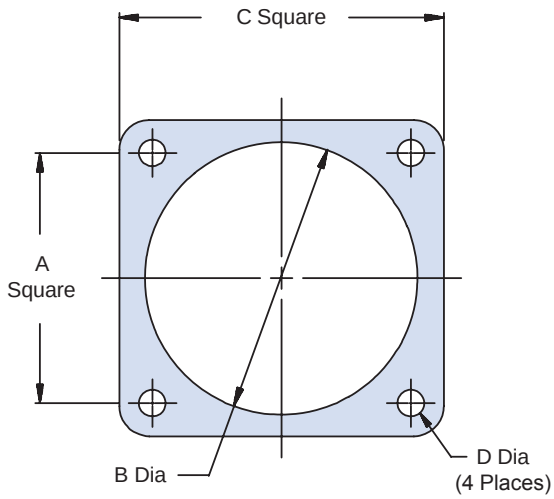

Designator	A	B Dia.	C	D Dia.
A (11)	.760 (19.30) .740 (18.80)	.766 (19.46) .750 (19.05)	1.039 (26.39) 1.023 (25.98)	.130 (3.30) .110 (2.79)
B (13)	.853 (21.67) .833 (21.16)	.891 (22.63) .875 (22.22)	1.154 (29.31) 1.138 (28.90)	
C (15)	.978 (24.84) .958 (24.33)	1.078 (27.38) 1.062 (26.97)	1.274 (32.36) 1.258 (31.95)	
D (17)	1.025 (26.04) 1.005 (25.53)	1.141 (28.98) 1.125 (28.58)	1.399 (26.39) 1.383 (35.13)	
E (19)	1.150 (29.21) 1.130 (28.70)	1.338 (33.98) 1.312 (33.32)	1.524 (38.71) 1.508 (38.30)	
F (23)	1.291 (32.79) 1.271 (32.28)	1.516 (38.51) 1.500 (38.10)	1.734 (44.04) 1.718 (43.64)	
G (25)	1.402 (35.61) 1.382 (35.10)	1.641 (41.68) 1.625 (41.28)	1.834 (46.58) 1.818 (46.18)	.157 (3.99) .137 (3.48)
H (29)	1.578 (40.08) 1.558 (39.57)	1.891 (48.03) 1.875 (47.62)	2.154 (54.71) 2.138 (54.30)	
J (33)	1.744 (44.30) 1.724 (43.79)	2.078 (52.78) 2.062 (52.37)	2.344 (59.54) 2.328 (59.13)	.183 (4.65) .163 (4.14)

© 2013 Glenair, Inc. CAGE Code 06324 Printed in U.S.A.

M28840/25
90° EMI Conduit Adapter

Military Designator	Dash Number		Style Designator
M28840/25	16	W	A

Style Designator
A - EMI, Non-Environmental
B - EMI, Environmental

Material and Finish Designator
W - Aluminum, Cadmium Plate, O.D. over Electroless Nickel
D - Corrosion Resistant Steel, Cadmium Plate, Black

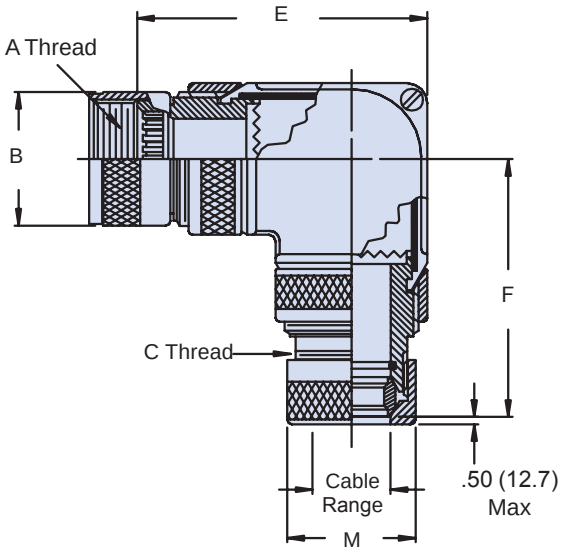

STYLE A - EMI/Non-Environmental
(Plain Conduit)

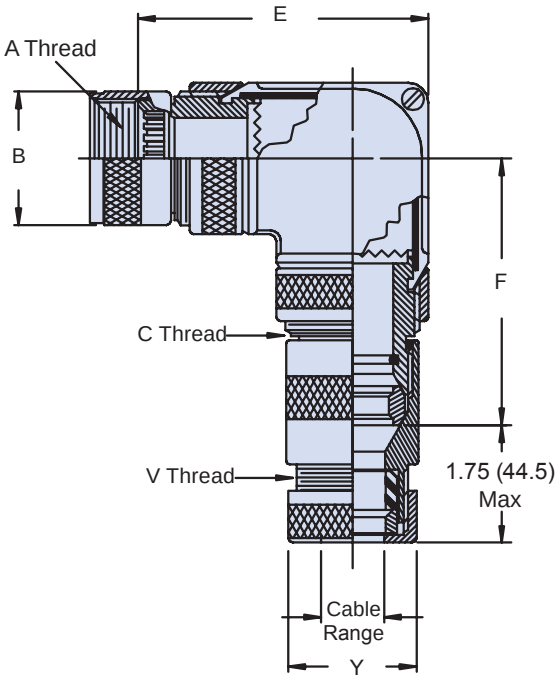

STYLE B - EMI/Environmental
(Jacket Conduit)

© 2013 Glenair, Inc.

GLENAIR, INC. • 1211 AIR WAY • GLENDALE, CA 91201-2497 • 818-247-6000 • FAX 818-500-9912
www.glenair.com
E-Mail: sales@glenair.com

M28840/25
90° EMI Conduit Adapter

Dash Number	Designator	A Thread Class 2B	B Diameter Max.	C Thread Class 1	D Max Diameter	Sealing Range	
						Max.	Min.
01	A (11)	.750-20 UNEF	1.028 (26.11)	.875-20 UNEF	1.031 (26.19)	.63 (16.0)	.50 (12.7)
02	B (13)	.875-20 UNEF	1.141 (28.98)	.875-20 UNEF		.63 (16.0)	.50 (12.7)
03				1.000-20 UNEF		.75 (19.1)	.63 (16.0)
04	C (15)	1.000-20 UNEF	1.263 (32.08)	.875-20 UNEF	1.281 (32.58)	.63 (16.0)	.50 (12.7)
05				1.000-20 UNEF		.75 (19.1)	.63 (16.0)
06				1.125-18 UNEF		.88 (22.4)	.75 (19.1)
07				1.250-18 UNEF	1.531 (38.89)	1.00 (25.4)	.88 (22.4)
08	D (17)	1.125-18 UNEF	1.387 (35.23)	1.125-18 UNEF		.88 (22.4)	.75 (19.1)
09				1.250-18 UNEF		1.00 (25.4)	.88 (22.4)
10				1.625-18 UNEF		1.38 (35.1)	1.19 (30.2)
11	E (19)	1.250-18 UNEF	1.513 (38.43)	1.125-18 UNEF		.88 (22.4)	.75 (19.1)
12				1.250-18 UNEF		1.00 (25.4)	.88 (22.4)
13				1.625-18 UNEF	1.781 (45.24)	1.38 (35.1)	1.19 (30.2)
14	F (23)	1.438-18 UNEF	1.703 (45.51)	1.250-18 UNEF		1.00 (25.4)	.88 (22.4)
15				1.625-18 UNEF		1.38 (35.1)	1.18 (30.2)
16				1.875-18 UNS		1.63 (41.4)	1.44 (36.6)
17	G (25)	1.562-18 UNEF	1.825 (46.35)	1.250-18 UNEF		1.00 (25.4)	.88 (22.4)
18				1.625-18 UNEF		1.38 (35.1)	1.19 (30.2)
19				1.875-18 UNS		1.63 (41.4)	1.44 (36.5)
20				2.125-16 UN	2.031 (51.59)	1.88 (47.8)	1.63 (41.4)
21	H (29)	1.875-16 UN	2.143 (54.43)	1.875-18 UNS		1.63 (41.4)	1.44 (36.6)
22				2.125-16 UN		1.33 (47.8)	1.63 (41.4)
23	J (33)	2.062-16 UNS	2.329 (59.16)	2.125-16 UN	2.531 (64.29)	1.88 (47.8)	1.63 (41.4)
24				2.750-16 UN		2.38 (60.5)	2.13 (54.1)
25	A (11)	.750-20 UNEF	1.028 (26.11)	.875-20 UNEF	1.031 (25.19)	.75 (19.5)	.63 (16.0)

© 2013 Glenair, Inc.

GLENAIR, INC. • 1211 AIR WAY • GLENDALE, CA 91201-2497 • 818-247-6000 • FAX 818-500-9912
www.glenair.com E-Mail: sales@glenair.com

M28840/25
90° EMI Conduit Adapter

Dash Number	Designator	Conduit Size M 04	E Max. Dim.	F Max. Dim.	V Thread Class 2	M Max. Dia.	Y Max. Dia.
01	A (11)	03	2.36 (59.9)	3.50 (92.8)	1.000-20 UNEF	1.12 (28.5)	1.19 (30.23)
02	B (13)	03			1.000-20 UNEF	1.12 (28.5)	1.19 (30.23)
03		04			1.188-18 UNEF	1.25 (31.8)	1.38 (35.1)
04	C (15)	03	2.56 (65.0)	3.69 (9.79)	1.000-20 UNEF	1.12 (28.5)	1.39 (35.3)
05		04			1.118-18 UNEF	1.25 (31.8)	1.38 (35.1)
06		05			1.438-18 UNEF	1.43 (36.3)	1.63 (41.4)
07		06	2.67 (67.8)	3.81 (101.0)	1.750-18 UNS	1.62 (41.2)	1.94 (49.3)
08	D (17)	05			1.438-18 UNEF	1.43 (36.3)	1.63 (41.4)
09		06			1.750-18 UNS	1.62 (42.2)	1.94 (49.3)
10		08			2.00-18 UNS	1.81 (46.0)	2.19 (55.6)
11	E (19)	05			1.438-18 UNEF	1.43 (36.3)	1.63 (41.4)
12		06			1.750-18 UNS	1.62 (41.2)	1.94 (49.3)
13		08	3.05 (77.5)	4.19 (111.1)	2.00-18 UNS	1.81 (46.0)	2.19 (55.6)
14	F (23)	06			1.750-18 UNS	1.62 (41.2)	1.94 (49.3)
15		08			2.00-18 UNS	1.81 (46.0)	2.19 (55.6)
16		10			2.250-18 UN	2.18 (55.4)	2.44 (62.0)
17	G (25)	06			1.750-18 UNS	1.62 (41.2)	1.94 (49.3)
18		08			2.00-18 UN	1.81 (46.0)	2.19 (55.6)
19		10			2.250-18 UN	2.18 (55.4)	2.44 (62.0)
20		12	3.33 (84.6)	4.50 (119.4)	2.500-16 UN	2.56 (65.0)	2.69 (68.5)
21	H (29)	10			2.250-16 UN	2.18 (55.4)	2.18 (55.4)
22		12			1.500-16 UN	2.56 (65.0)	2.44 (62.0)
23	J (33)	12	3.70 (94.0)	4.43 (128.1)	2.500-16 UN	2.56 (65.0)	2.69 (68.3)
24		16			3.00-16 UN	3.06 (77.8)	3.19 (81.0)
25	A (11)	04	2.36 (59.9)	3.50 (92.8)	1.133-18 UNF	1.25 (31.8)	1.38 (35.1)

© 2013 Glenair, Inc.

GLENAIR, INC. • 1211 AIR WAY • GLENDALE, CA 91201-2497 • 818-247-6000 • FAX 818-500-9912
www.glenair.com
E-Mail: sales@glenair.com

M28840/26
Plug Connector
with Straight EMI/RFI Backshell

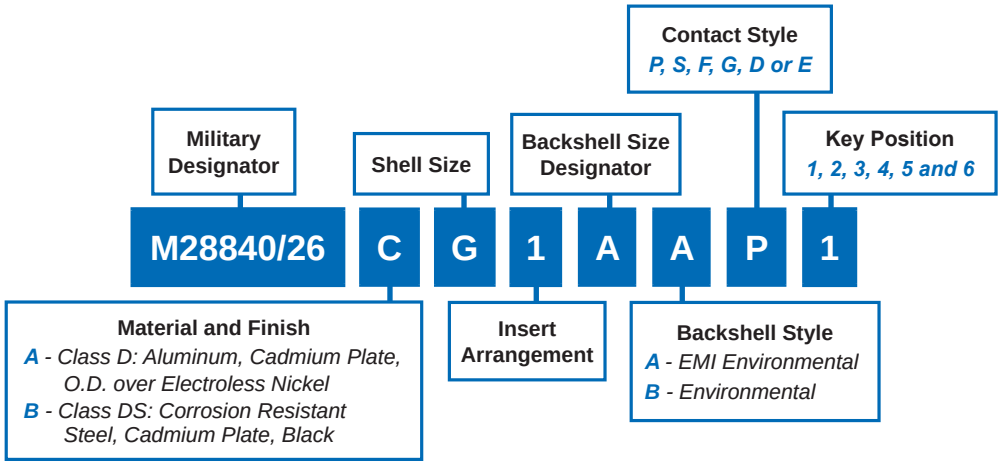

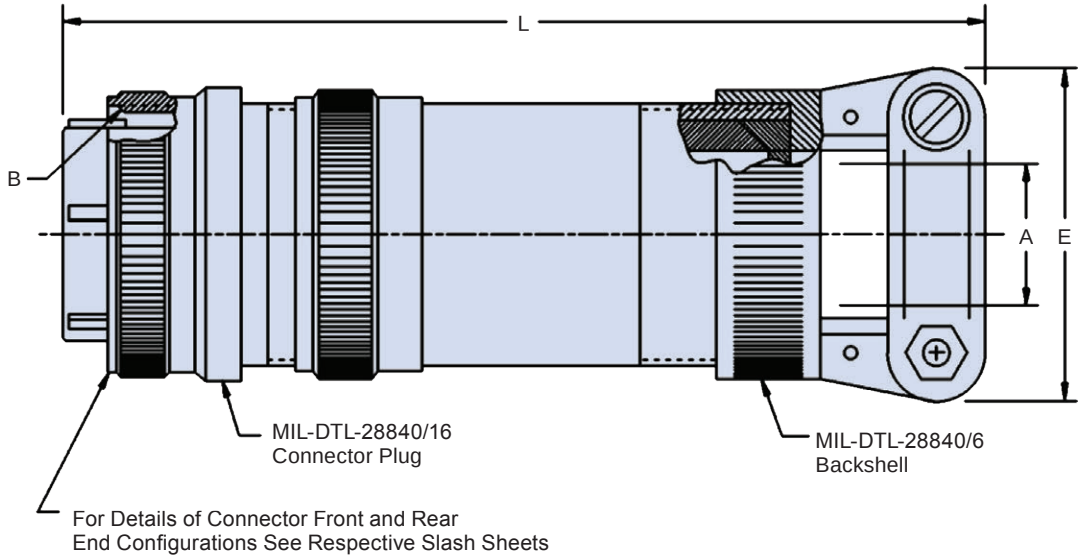

© 2013 Glenair, Inc.

GLENAIR, INC. • 1211 AIR WAY • GLENDALE, CA 91201-2497 • 818-247-6000 • FAX 818-500-9912
www.glenair.com
E-Mail: sales@glenair.com

M28840/26 Plug Connector with Straight EMI/RFI Backshell

Military Shell Size	Shell Size	B Thread Class 2B	Backshell Size Designator	A Cable Entry Open	A Cable Entry Closed	E Max.	L Max.
A	11	.750-1P-.2L-DS	A	.312	.188	.938	6.500
			B	.438	.281	1.125	
			C	.562	.344	1.312	
B	13	.875-1P-.2L-DS	A	.312	.188	.938	
			B	.438	.281	1.125	
			C	.562	.344	1.312	
			D	.652	.375	1.312	7.000
C	15	1.062-1P-.2L-DS	A	.438	.281	1.125	6.500
			B	.562	.344	1.312	
			C	.625	.375	1.312	7.000
			D	.750	.438	1.593	
			E	.312	.188	.938	
D	17	1.125-1P-.2L-DS	A	.625	.375	1.312	
			B	.750	.438	1.593	
			C	.938	.625	1.750	
E	19	1.312-1P-.2L-DS	A	.625	.375	1.312	7.500
			B	.938	.625	1.750	7.625
F	23	1.500-1P-.2L-DS	A	.750	.438	1.593	7.812
			B	.938	.625	1.750	7.625
			C	1.188	.812	2.093	8.312
G	25	1.625-1P-.2L-DS	A	.938	.625	1.750	
			B	1.188	.812	2.093	
			C	1.250	.875	2.093	
			D	1.380	1.000	2.343	
H	29	1.812-1P-.2L-DS	A	1.188	.812	2.093	
			B	1.380	1.000	2.343	
J	33	2.000-1P-.2L-DS	A	1.380	1.000	2.343	
			B	1.625	1.250	2.750	8.625

© 2013 Glenair, Inc.

GLENAIR, INC. • 1211 AIR WAY • GLENDALE, CA 91201-2497 • 818-247-6000 • FAX 818-500-9912
www.glenair.com E-Mail: sales@glenair.com

M28840/27
45° EMI Conduit Adapter

Glenair®

Military Designator	Dash Number		Style Designator
M28840/27	16	W	A

Style Designator
- ***A*** *- EMI, Non-Environmental*
- ***B*** *- Emi, Environmental*

Material and Finish Designator
- ***W*** *- Aluminum, Cadmium Plate, O.D. over Electroless Nickel*
- ***D*** *- Corrosion Resistant Steel, Cadmium Plate, Black*

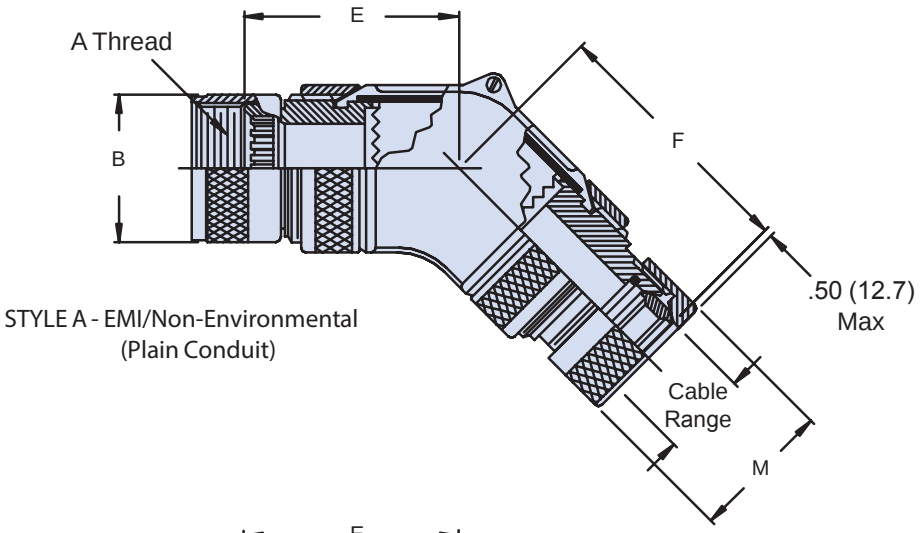

STYLE A - EMI/Non-Environmental
(Plain Conduit)

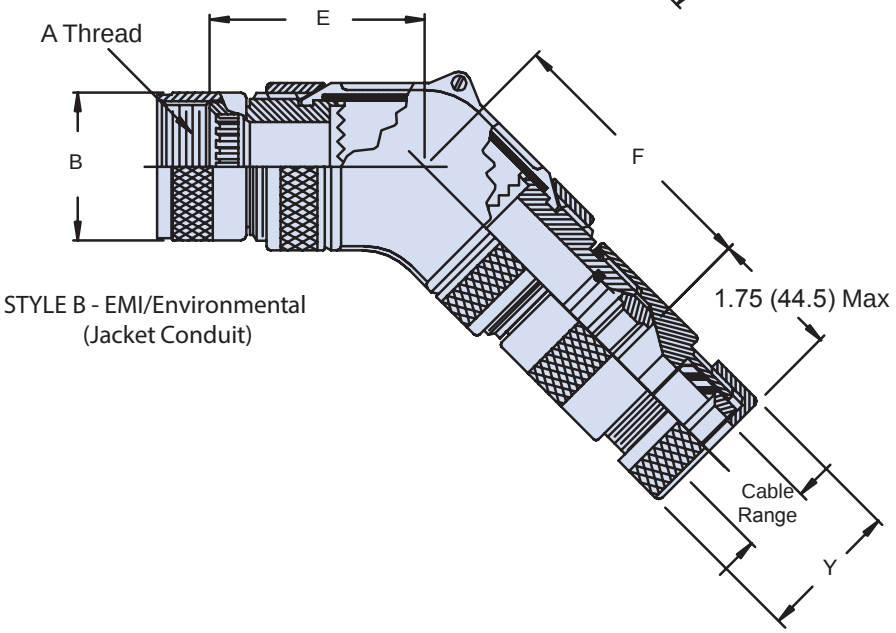

STYLE B - EMI/Environmental
(Jacket Conduit)

© 2013 Glenair, Inc.

GLENAIR, INC. • 1211 AIR WAY • GLENDALE, CA 91201-2497 • 818-247-6000 • FAX 818-500-9912
www.glenair.com
E-Mail: sales@glenair.com

Glenair®

M28840/27
45° EMI Conduit Adapter

Dash No.	Designator	A Thread Class 2B	B Max Diameter	C Thread Class 2	D Max. Diameter	Sealing Range Max.	Sealing Range Min.	Conduit Size M 04	E Max. Dim.
01	A (11)	.750-20 UNEF	1.028 (26.11)	.875-20 UNEF	1.031 (26.19)	.63 (16.0)	.50 (12.7)	03	2.36 (59.9)
02	B (13)	.875-20 UNEF	1.141 (28.98)	.875-20 UNEF		.63 (16.0)	.50 (12.7)	03	
03				1.000-20 UNEF		.75 (19.1)	.63 (16.0)	04	
04	C (15)	1.000-20 UNEF	1.263 (32.08)	.875-20 UNEF	1.281 (32.50)	.63 (16.0)	.50 (12.7)	03	2.56 (65.0)
05				1.000-20 UNEF		.75 (19.1)	.63 (16.0)	04	
06				1.125-18 UNEF		.88 (22.4)	.75 (19.1)	05	
07				1.250-18 UNEF	1.531 (38.80)	1.00 (25.4)	.88 (22.4)	06	2.67 (67.8)
08	D (17)	1.125-18 UNEF	1.387 (38.23)	1.125-18 UNEF		.88 (22.4)	.75 (19.1)	05	
09				1.250-18 UNEF		1.00 (25.4)	.88 (22.4)	06	
10				1.625-18 UNEF		1.38 (35.1)	1.19 (22)	08	
11	E (19)	1.250-18 UNEF	1.513 (38.43)	1.125-18 UNEF		.88 (22.4)	.75 (19.1)	05	
12				1.250-18 UNEF		1.00 (25.4)	.88 (22.4)	06	
13				1.625-18 UNEF	1.781 (45.24)	1.38 (35.1)	1.19 (30.2)	08	3.05 (77.5)
14	F (23)	1.438-18 UNEF	1.703 (45.51)	1.250-18 UNEF		1.000 (25.4)	.88 (22.4)	06	
15				1.625-18 UNEF		1.38 (35.1)	1.19 (30.2)	08	
16				1.875-18 UNS		1.63 (41.4)	1.44 (36.6)	10	
17	G (25)	1.562-18 UNEF	1.825 (46.35)	1.250-18 UNEF		1.00 (25.4)	.88 (22.4)	06	
18				1.625-18 UNEF		1.38 (41.4)	1.19 (30.2)	08	
19				1.875-18 UNS		1.43 (41.4)	1.44 (36.6)	10	
20				2.125-16 UN	2.031 (51.59)	1.88 (47.8)	1.63 (41.4)	12	3.33 (84.6)
21	H (29)	1.875-16 UNS	2.143 (54.43)	1.875-18 UNS		1.63 (41.4)	1.44 (36.6)	10	
22				2.125-16 UN		1.88 (47.8)	1.63 (41.4)	12	
23	J (33)	2.062-16 UNS	2.329 (50.16)	2.125-16 UN	2.531 (64.29)	1.88 (47.8)	1.63 (41.4)	12	3.70 (94.0)
24				2.750-16 UN		2.38 (60.5)	2.13 (54.1)	16	
25	A (11)	.750-20 UNEF	1.028 (16.11)	.875-20 UNEF	1.031 (26.19)	.75 (19.1)	.63 (16.0)	04	2.36 (59.9)

© 2013 Glenair, Inc.

GLENAIR, INC. • 1211 AIR WAY • GLENDALE, CA 91201-2497 • 818-247-6000 • FAX 818-500-9912
www.glenair.com
E-Mail: sales@glenair.com

M28840/27
45° EMI Conduit Adapter

Dash Number	Designator	F Max. Dim.	V Thread Class 2	M Max. Diameter	Y Max. Diameter
1	A (11)	3.50 (88.9)	1.000-20 UNEF	1.12 (28.5)	1.19 (30.23)
2	B (13)		1.000-20 UNEF	1.12 (28.5)	1.19 (30.23)
3			1.188-18 UNEF	1.25 (31.8)	1.38 (35.1)
4	C (15)	3.69 (93.7)	1.000-20 UNEF	1.12 (28.5)	1.19 (30.23)
5			1.188-18 UNEF	1.25 (31.8)	1.38 (35.1)
6			1.438-18 UNEF	1.43 (36.3)	1.63 (41.4)
7		3.81 (96.7)	1.750-18 UNS	1.62 (41.2)	1.94 (49.3)
8	D (17)		1.438-18 UNEF	1.43 (36.3)	1.63 (41.4)
9			1.750-18 UNS	1.62 (41.2)	1.94 (49.3)
10			2.00-18 UNS	1.81 (46.0)	2.19 (55.6)
11	E (19)		1.438-18 UNEF	1.43 (36.3)	1.63 (41.4)
12			1.750-18 UNS	1.62 (41.2)	1.94 (49.3)
13		4.19 (106.4)	2.00-18 UNS	1.81 (46.0)	2.19 (55.6)
14	F (23)		1.750-18 UNS	1.62 (41.2)	1.94 (49.3)
15			2.00-18 UN	1.81 (46.0)	2.19 (55.6)
16			2.250-16 UN	2.18 (55.4)	2.44 (62.0)
17	G (25)		1.750-18 UNS	1.62 (41.2)	1.94 (49.3)
18			2.00-18 UN	1.81 (46.0)	2.19 (55.6)
19			2.250-16 UN	2.18 (55.4)	2.44 (62.0)
20		4.50 (114.3)	2.500-16 UN	2.56 (65.0)	2.69 (68.3)
21	H (29)		2.250-16 UN	2.18 (55.4)	2.44 (62.0)
22			2.500-16 UN	2.56 (65.0)	2.69 (68.3)
23	J (33)	4.83 (122.6)	2.500-16 UN	2.56 (65.0)	2.69 (68.3)
24			3.00-16 UN	3.06 (77.8)	3.19 (81.0)
25	A (11)	3.50 (88.9)	1.188-18 UNEF	1.25 (31.8)	1.38 (35.1)

© 2013 Glenair, Inc.

GLENAIR, INC. • 1211 AIR WAY • GLENDALE, CA 91201-2497 • 818-247-6000 • FAX 818-500-9912
www.glenair.com
E-Mail: sales@glenair.com

M28840/28
90° Adapter Assembly Plug

Contact Style
P, S, F, G, D or E

Military Designator

Shell Size

Backshell Size Designator

Key Position
1, 2, 3, 4, 5 and 6

M28840/28	C	G	1	B	A	P	1

Material and Finish
A *- Class D: Aluminum, Cadmium Plate, O.D. over Electroless Nickel*
B *- Class DS: Corrosion Resistant Steel, Cadmium Plate, Black*

Insert Arrangement

Backshell Style
A *- EMI Environmental*
B *- Environmental*

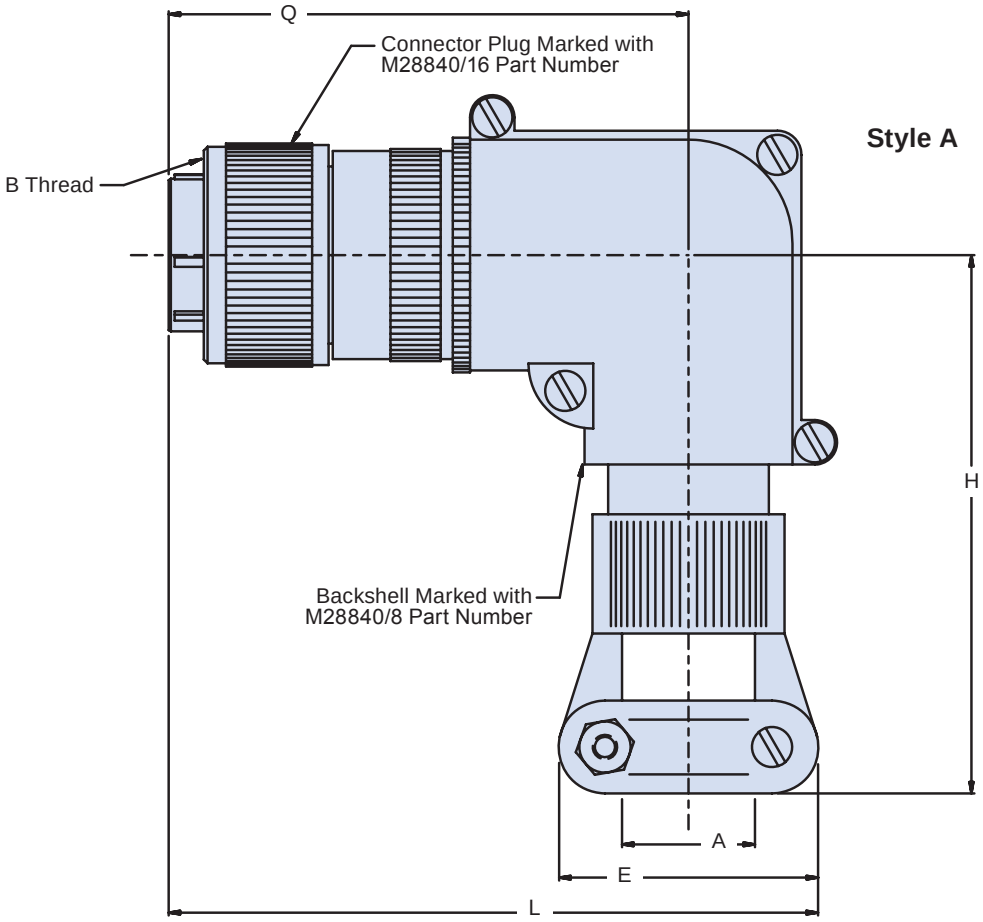

© 2013 Glenair, Inc.
CAGE Code 06324
Printed in U.S.A.

M28840/28
90° Adapter Assembly Plug

Military Shell Size	Shell Size	Backshell Size Designator	A Cable Entry		B Thread Class 2B	E Max.	H Max.	L Max.	Q Max.
			Open	Closed					
A	11	A	.312	.188	.750-1P-.2L-DS	.938	5.332	3.812	3.250
A	11	B	.438	.281		1.125	5.332	3.812	3.250
A	11	C	.562	.344		1.312	5.457	4.000	3.375
B	13	A	.438	.281	.875-1P-.2L-DS	1.125	5.332	3.812	3.250
B	13	B	.562	.344		1.312	5.457	4.000	3.375
B	13	C	.625	.375		1.312	5.682	4.250	3.500
C	15	A	.438	.281	1.062-1P-.2L-DS	1.125	5.457	4.000	3.375
C	15	B	.562	.344		1.312	5.457	4.000	3.375
C	15	C	.625	.375		1.312	5.682	4.250	3.500
C	15	D	.750	.438		1.593	5.713	4.125	3.500
D	17	A	.625	.375	1.125-1P-.2L-DS	1.312	5.682	4.250	3.500
D	17	B	.750	.438		1.593	5.713	4.250	3.500
E	19	A	.625	.375	1.312-1P-.2L-DS	1.312	5.682	4.250	3.500
E	19	B	.938	.625		1.750	5.832	4.375	3.625
F	23	A	.750	.438	1.500-1P-.2L-DS	1.593	5.738	4.500	3.625
F	23	B	.938	.625		1.750	5.832	4.500	3.625
F	23	C	1.188	.812		2.093	6.019	4.688	3.625
G	25	A	.938	.625	1.625-1P-.2L-DS	1.750	5.832	4.500	3.625
G	25	B	1.188	.812		2.093	6.019	4.688	3.625
G	25	C	1.250	.875		2.093	6.144	4.688	3.750
G	25	D	1.380	1.000		2.343	6.176	4.938	3.750
H	29	A	1.188	.812	1.812-1P-.2L-DS	2.093	6.144	4.812	3.750
H	29	B	1.380	1.000		2.343	6.176	4.938	3.750
J	33	A	1.380	1.000	2.000-1P-.2L-DS	2.343	6.426	5.188	4.000
J	33	B	1.625	1.250		2.750	6.701	5.375	4.000

© 2013 Glenair, Inc.

GLENAIR, INC. • 1211 AIR WAY • GLENDALE, CA 91201-2497 • 818-247-6000 • FAX 818-500-9912
www.glenair.com
E-Mail: sales@glenair.com

M28840/29
Plug Connector
with 45° EMI/RFI Backshell

Backshell Style
A - EMI Environmental
B - Environmental

Military Designator

Shell Size

Backshell Size Designator

Key Position
1, 2, 3, 4, 5 and 6

M28840/29	C	G	1	B	A	P	1

Material and Finish
A - Class D: Aluminum, Cadmium Plate, O.D. over Electroless Nickel
B - Class DS: Corrosion Resistant Steel, Cadmium Plate, Black

Insert Arrangement

Contact Style
P, S, F, G, D or E

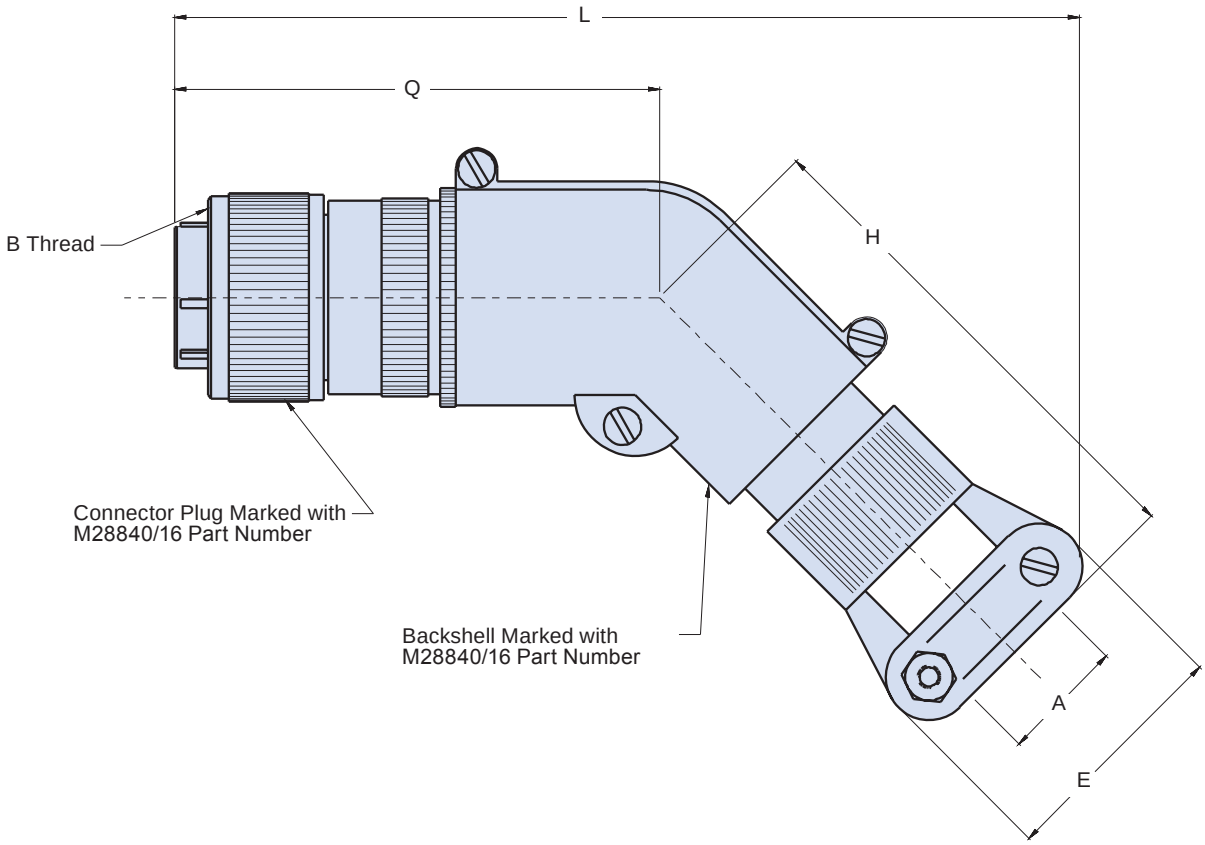

© 2013 Glenair, Inc.

GLENAIR, INC. • 1211 AIR WAY • GLENDALE, CA 91201-2497 • 818-247-6000 • FAX 818-500-9912
www.glenair.com
E-Mail: sales@glenair.com

M28840/29
Plug Connector
with 45° EMI/RFI Backshell

Glenair®

Military Shell Size	Shell Size	Backshell Size Designator	A Cable Entry		B Thread Class 2B	E Max.	H Max.	L Max.	Q Max.
			Open	Closed					
A	11	A	.312	.188	.750-1P-.2L-DS	.938	5.432	7.404	3.250
A	11	B	.438	.281		1.125	5.432	7.457	3.250
A	11	C	.562	.344		1.312	5.557	7.727	3.375
B	13	A	.438	.281	.875-1P-.2L-DS	1.125	5.432	7.457	3.250
B	13	B	.562	.344		1.312	5.557	7.727	3.375
B	13	C	.625	.375		1.312	5.682	7.938	3.500
C	15	A	.438	.281	1.062-1P-.2L-DS	1.125	5.557	7.671	3.375
C	15	B	.562	.344		1.312	5.557	7.727	3.375
C	15	C	.625	.375		1.312	5.682	7.938	3.500
C	15	D	.750	.438		1.593	5.713	8.058	3.500
D	17	A	.625	.375	1.125-1P-.2L-DS	1.312	5.682	7.938	3.500
D	17	B	.750	.438		1.593	5.713	8.058	3.500
E	19	A	.625	.375	1.312-1P-.2L-DS	1.312	5.682	7.938	3.500
E	19	B	.938	.625		1.750	5.932	8.371	3.625
F	23	A	.750	.438	1.500-1P-.2L-DS	1.593	5.838	8.272	3.625
F	23	B	.938	.625		1.750	5.932	8.371	3.625
F	23	C	1.188	.812		2.093	6.119	8.628	3.625
G	25	A	.938	.625	1.625-1P-.2L-DS	1.750	5.932	8.371	3.625
G	25	B	1.188	.812		2.093	6.119	8.628	3.625
G	25	C	1.250	.875		2.093	6.244	8.841	3.750
G	25	D	1.380	1.000		2.343	6.276	8.950	3.750
H	29	A	1.188	.812	1.812-1P-.2L-DS	2.093	6.244	8.841	3.750
H	29	B	1.380	1.000		2.343	6.276	8.950	3.750
J	33	A	1.380	1.000	2.000-1P-.2L-DS	2.343	6.526	9.377	4.000
J	33	B	1.625	1.250		2.750	6.801	9.659	4.000

© 2013 Glenair, Inc.

GLENAIR, INC. • 1211 AIR WAY • GLENDALE, CA 91201-2497 • 818-247-6000 • FAX 818-500-9912
www.glenair.com
E-Mail: sales@glenair.com

M28840/30
Metal Conduit Coupler
Styles A and B

Military Designator	Dash Number	Material and Finish Designator	Style Designator
M28840/30	16	W	A

Style Designator
- *A - EMI Environmental*
- *B - Environmental*

Material and Finish Designator
- *W - Aluminum, Cadmium Plate, O.D. over Electroless Nickel*
- *D - Corrosion Resistant Steel, Cadmium Plate, Black*

STYLE A
EMI/Non-Environmental
(Plain Conduit)

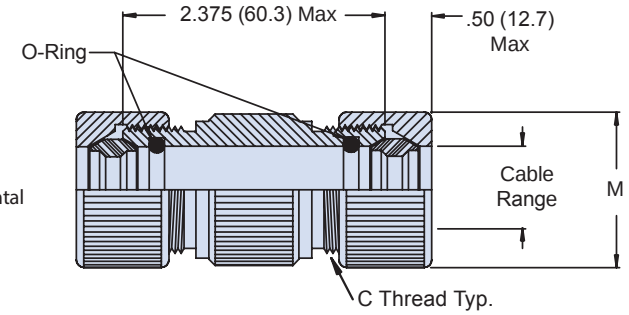

STYLE B
EMI/Environmental
(Jacket Conduit)

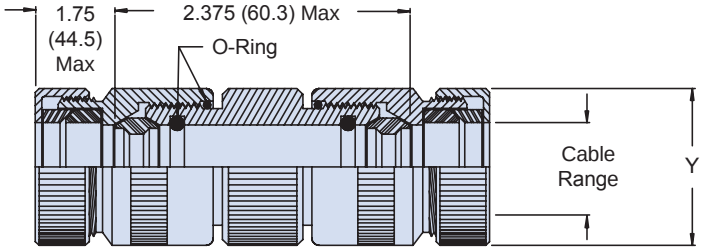

Dash Number	Conduit Size	Sealing Range		C Thread	M Max Diameter	V Thread Class 2	Y Max Diameter
		Max.	Min.				
03	03	.63 (16.0)	.50 (12.7)	.875-20 UNEF	1.12 (28.5)	1.00-20 UNEF	1.19 (30.23)
04	04	.75 (19.1)	.63 (16.0)	1.000-20 UNEF	1.25 (31.8)	1.188-18 UNEF	1.38 (35.1)
05	05	.88 (22.4)	.75 (18.1)	1.125-18 UNEF	1.43 (36.3)	1.438-18 UNEF	1.63 (41.4)
06	06	1.00 (25.4)	.88 (22.4)	1.250-18 UNEF	1.62 (41.2)	1.750-18 UNS	1.94 (49.3)
08	08	1.38 (35.1)	1.19 (30.2)	1.625-18 UNEF	1.81 (46.0)	2.00-18 UNS	2.19 (55.6)
10	10	1.63 (41.4)	1.44 (36.6)	1.875-18 UNS	2.18 (55.4)	2.250-16 UN	2.44 (62.0)
12	12	1.88 (47.8)	1.63 (41.4)	2.125-16 UN	2.56 (65.0)	2.50-16 UN	2.69 (68.3)
16	16	2.38 (60.5)	2.13 (54.1)	2.750-16 UN	3.06 (77.8)	3.00-16 UN	3.19 (81.0)

© 2013 Glenair, Inc. CAGE Code 06324 Printed in U.S.A.

907-003
Glenair MIL-DTL-28840 Commercial Equivalent
Box Mount Receptacle with PC Tail Contacts

Basic Part Number		Shell Size (See Table)		Key Position
907-003	- NF	25	- P	1

Finish
NF - Olive Drab Cadmium / Nickel

Contact Style
P - Pin Contacts / PC Tail
S - Socket Contacts / PC Tail

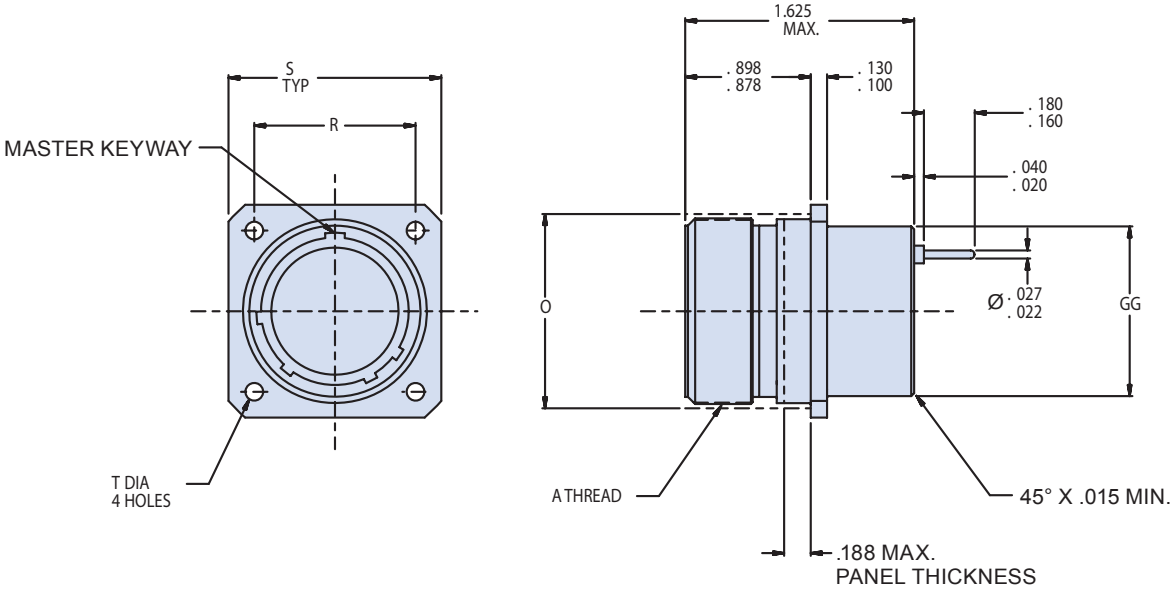

© 2013 Glenair, Inc. CAGE Code 06324 Printed in U.S.A.

907-003
Glenair MIL-DTL-28840 Commercial Equivalent
Box Mount Receptacle with PC Tail Contacts

Symbol	Material	Finish Description
NF	Aluminum	Cadmium O.D. over Electroless Nickel
ZN		Zinc Nickel
MT		Nickel-PTFE, *1000 Hour Grey™*
Z1	316 Type Stainless Steel	Passivate
ZU		Black Cadmium Olive Drab over Nickel

Military Shell Size	Shell Size	A Thread Class 2A	O Ref. Mtg. Max.	R True Position ℄ to ℄	S	T	GG Diameter Max.
A	11	.750-.1P-.2L-D.S.	.812	.750	1.043 1.003	.130 .115	.758
B	13	.875 -.1P-.2L-D.S.	.937	.843	1.158 1.118		.880
C	15	1.062 -.1P-.2L-D.S.	1.124	.968	1.278 1.238		1.005
D	17	1.125 -.1P-.2L-D.S.	1.187	1.015	1.403 1.363		1.130
E	19	1.312 -.1P-.2L-D.S.	1.374	1.140	1.528 1.488		1.255
F	23	1.500 -.1P-.2L-D.S.	1.562	1.281	1.738 1.698		1.443
G	25	1.625 -.1P-.2L-D.S.	1.687	1.392	1.838 1.798	.157 .142	1.567
H	29	1.812 -.1P-.2L-D.S.	1.937	1.568	2.158 2.118		1.880
J	33	2.000 -.1P-.2L-D.S.	2.124	1.734	2.348 2.308	.183 .168	2.067

© 2013 Glenair, Inc.

GLENAIR, INC. • 1211 AIR WAY • GLENDALE, CA 91201-2497 • 818-247-6000 • FAX 818-500-9912
www.glenair.com
E-Mail: sales@glenair.com

907-037
Glenair MIL-DTL-28840 Commercial Equivalent
Box Mount Receptacle with PC Tail Contacts

Basic Part Number		Shell Size (See Table)		Key Position
907-037	- NF	25	- S	1

Finish
NF *- Olive Drab Cadmium / Nickel*

Contact Style
S *- Socket Contacts / PC Tail*

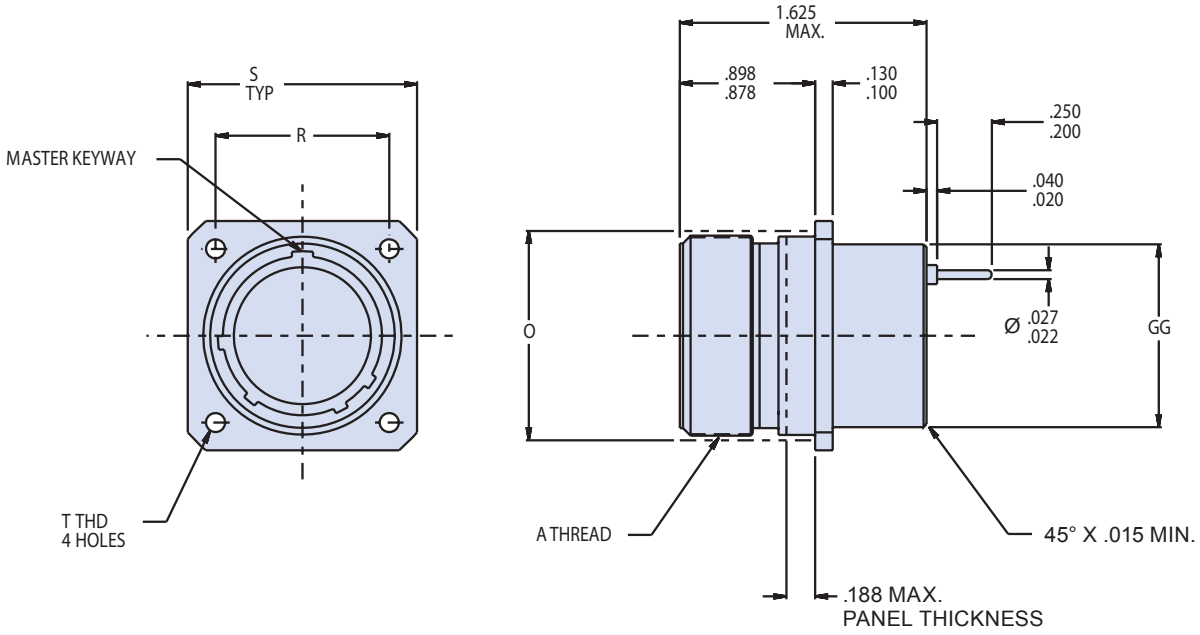

© 2013 Glenair, Inc. CAGE Code 06324 Printed in U.S.A.

907-037
Glenair MIL-DTL-28840 Commercial Equivalent
Box Mount Receptacle with PC Tail Contacts

Symbol	Material	Finish Description
NF	Aluminum	Cadmium O.D. over Electroless Nickel
ZN		Zinc Nickel
MT		Nickel-PTFE, *1000 Hour Grey™*
Z1	316 Type Stainless Steel	Passivate
ZU		Black Cadmium Olive Drab over Nickel

Military Shell Size	Shell Size	A Thread Class 2A	O Ref. Mtg. Max.	R True Position ℄ to ℄	S	T	GG Diameter Max.
A	11	.750-.1P-.2L-D.S.	.812	.750	1.043 1.003	#4-40	.758
B	13	.875 -.1P-.2L-D.S.	.937	.843	1.158 1.118	#4-40	.880
C	15	1.062 -.1P-.2L-D.S.	1.124	.968	1.278 1.238	#4-40	1.005
D	17	1.125 -.1P-.2L-D.S.	1.187	1.015	1.403 1.363	#4-40	1.130
E	19	1.312 -.1P-.2L-D.S.	1.374	1.140	1.528 1.488	#4-40	1.255
F	23	1.500 -.1P-.2L-D.S.	1.562	1.281	1.738 1.698	#4-40	1.443
G	25	1.625 -.1P-.2L-D.S.	1.687	1.392	1.838 1.798	#6-32	1.567
H	29	1.812 -.1P-.2L-D.S.	1.937	1.568	2.158 2.118	#6-32	1.880
J	33	2.000 -.1P-.2L-D.S.	2.124	1.734	2.348 2.308	#6-32	2.067

© 2013 Glenair, Inc.

GLENAIR, INC. • 1211 AIR WAY • GLENDALE, CA 91201-2497 • 818-247-6000 • FAX 818-500-9912
www.glenair.com
E-Mail: sales@glenair.com

240-288A
Sav-Con® Filtered Connector Saver
for MIL-DTL-28840 Connectors

Glenair®

Basic Number

Shell Size

Contact Style
PS - Pin Plug / Socket Receptacle
SP - Socket Plug / Pin Receptacle

Filter Capacitance (See Table III)

Alternate Key Position
1, 2, 3, 4, 5 and 6

240-288A M 25 - 1 PS C A N 1

Finish Symbol (See Table I)

Insert Arrangement (IAW MIL-STD-1698)

Filter Type (See Table II)

Flange Mounting Style
N - Not Applicable for this Connector Style

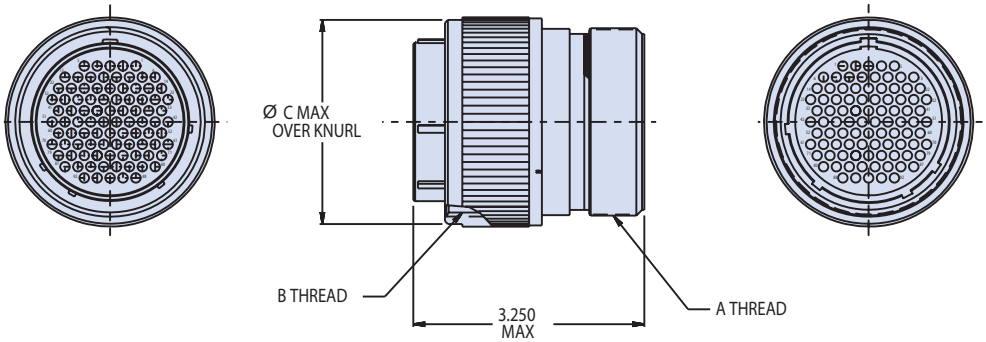

Military Shell Size	Shell Size	A Thread Class 2A	B Thread Class 2B	Ø C Max
A	11	.750-.1P-.2L-D.S.	.750-.1P-.2L-D.S.	1.028
B	13	.875-.1P-.2L-D.S.	.875-.1P-.2L-D.S.	1.141
C	15	1.062-.1P-.2L-D.S.	1.062-.1P-.2L-D.S.	1.263
D	17	1.125-.1P-.2L-D.S.	1.125-.1P-.2L-D.S.	1.387
E	19	1.312-.1P-.2L-D.S.	1.312-.1P-.2L-D.S.	1.513
F	23	1.500-.1P-.2L-D.S.	1.500-.1P-.2L-D.S.	1.703
G	25	1.625-.1P-.2L-D.S.	1.625-.1P-.2L-D.S.	1.825
H	29	1.812-.1P-.2L-D.S.	1.812-.1P-.2L-D.S.	2.143
J	33	2.000-.1P-.2L-D.S.	2.000-.1P-.2L-D.S.	2.329

© 2013 Glenair, Inc.

GLENAIR, INC. • 1211 AIR WAY • GLENDALE, CA 91201-2497 • 818-247-6000 • FAX 818-500-9912
www.glenair.com
E-Mail: sales@glenair.com

240-288A
Sav-Con® Filtered Connector Saver
for MIL-DTL-28840 Connectors

Symbol	Material	Finish Description
M	Aluminum	Electroless Nickel
MT	Aluminum	Nickel-PTFE, *1000 Hour Grey™*
NF	Aluminum	Cadmium O.D. over Electroless Nickel
P	Stainless Steel	Electrodeposited Nickel

Filter Type	
P	PI-Section
C	C-Section

Class	PI-Section (pF)	C-Section (pF)
X	160,000 - 240,000	80,000 - 120,000
Y	80,000 - 120,000	40,000 - 60,000
Z	60,00 - 91,000	30,000 - 45,000
A	38,000 - 56,000	19,000 - 28,000
B	32,000 - 45,000	16,000 - 22,500
C	18,000 - 33,000	9,000 - 16,500
D	8,000 - 12,000	4,000 - 6,000
E	3,300 - 5,000	1,650 - 2,500
F	800 - 1,300	400 - 650
G	400 - 600	200 - 300

© 2013 Glenair, Inc.

GLENAIR, INC. • 1211 AIR WAY • GLENDALE, CA 91201-2497 • 818-247-6000 • FAX 818-500-9912
www.glenair.com
E-Mail: sales@glenair.com

240-288W
Filtered Wall Mount Receptacle
MIL-DTL-28840 Type

Contact Style
- ***P*** *- Pin / 22 Ga Solder Cup*
- ***S*** *- Socket / 22 Ga Solder Cup*
- ***F*** *- Pin / 20 Ga Solder Cup*
- ***G*** *- Socket / 20 Ga Solder Cup*
- ***D*** *- Pin / 28 Ga Solder Cup*
- ***E*** *- Socket / 28 Ga Solder Cup*

Alternate Key Position
1, 2, 3, 4, 5 and 6

Basic Number

Filter Capacitance (See Table III)

240-288W M 25 - 1 P C A H 1

Finish Symbol (See Table I)

Shell Size

Filter Type (See Table II)

Flange Mounting Style
H *- Chamfered Holes*

Insert Arrangement (IAW MIL-STD-1698)

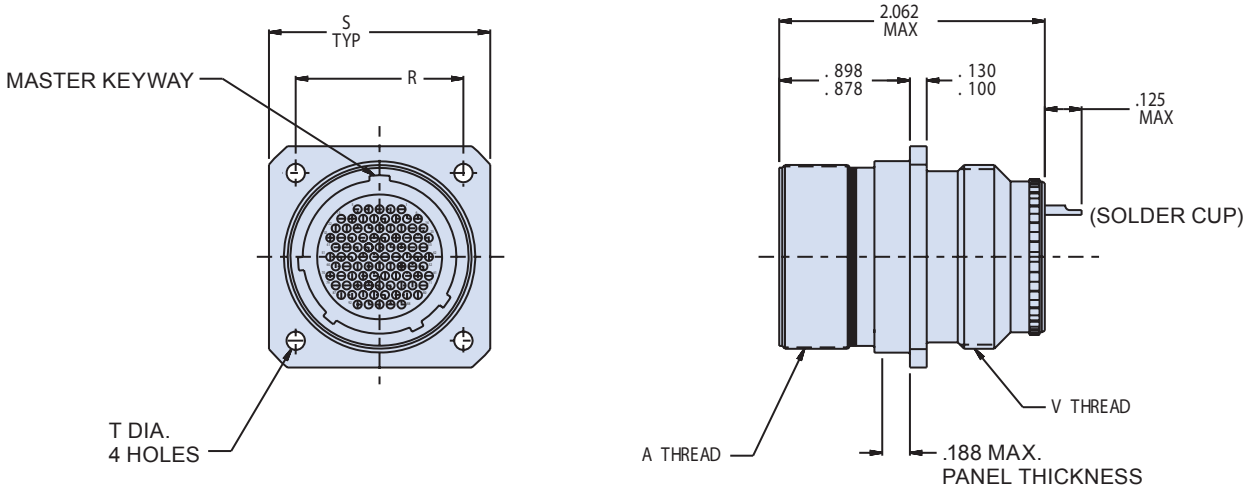

Symbol	Material	Finish Description
M	Aluminum	Electroless Nickel
MT	Aluminum	Nickel-PTFE, *1000 Hour Grey™*
NF	Aluminum	Cadmium O.D. over Electroless Nickel
P	Stainless Steel	Electrodeposited Nickel

© 2013 Glenair, Inc. CAGE Code 06324 Printed in U.S.A.

240-288W
Filtered Wall Mount Receptacle
MIL-DTL-28840 Type

Class	PI-Section (pF)	C-Section (pF)
X	160,000 - 240,000	80,000 - 120,000
Y	80,000 - 120,000	40,000 - 60,000
Z	60,00 - 91,000	30,000 - 45,000
A	38,000 - 56,000	19,000 - 28,000
B	32,000 - 45,000	16,000 - 22,500
C	18,000 - 33,000	9,000 - 16,500
D	8,000 - 12,000	4,000 - 6,000
E	3,300 - 5,000	1,650 - 2,500
F	800 - 1,300	400 - 650
G	400 - 600	200 - 300

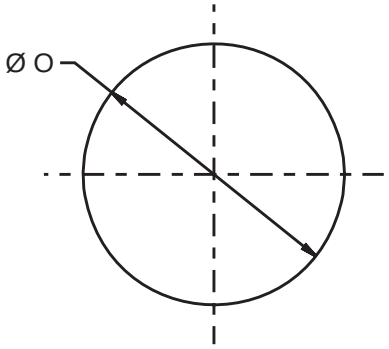

RECOMMENDED PANEL CUT OUT

Filter Type	
P	PI-Section
C	C-Section

Military Shell Size	Shell Size	A Thread Class 2A	V Thread Class 2A	O Ref. Mtg. Hole	R True Position ℄ to ℄	S	T Diameter
A	11	.750-.1P-.2L-D.S.	.750-20 UNEF	.812	.750	1.043 1.003	.130 .115
B	13	.875-.1P-.2L-D.S.	.875-20 UNEF	.937	.843	1.158 1.118	
C	15	1.062-.1P-.2L-D.S.	1.000-20 UNEF	1.124	.968	1.278 1.238	
D	17	1.125-.1P-.2L-D.S.	1.125-18 UNEF	1.187	1.015	1.403 1.363	
E	19	1.312-.1P-.2L-D.S.	1.250-18 UNEF	1.374	1.140	1.528 1.488	
F	23	1.500-.1P-.2L-D.S.	1.437-18 UNEF	1.562	1.281	1.738 1.698	
G	25	1.625-.1P-.2L-D.S.	1.562-18 UNEF	1.687	1.392	1.838 1.798	.157 .142
H	29	1.812-.1P-.2L-D.S.	1.875-16 UN	1.874	1.568	2.158 2.118	
J	33	2.000-.1P-.2L-D.S.	2.062-16 UNS	2.062	1.734	2.348 2.308	.183 .168

© 2013 Glenair, Inc. CAGE Code 06324 Printed in U.S.A.

240-288J
Filtered Jam Nut Mount Receptacle
MIL-DTL-28840 Type

Contact Style
- ***P*** *- Pin / 22 Ga Solder Cup*
- ***S*** *- Socket / 22 Ga Solder Cup*
- ***F*** *- Pin / 20 Ga Solder Cup*
- ***G*** *- Socket / 20 Ga Solder Cup*
- ***D*** *- Pin / 28 Ga Solder Cup*
- ***E*** *- Socket / 28 Ga Solder Cup*

Alternate Key Position
1, 2, 3, 4, 5 and 6

Basic Number

Filter Capacitance (See Table III)

240-288J	M	25	-	1	P	C	A	N	1

Finish Symbol (See Table I)

Shell Size

Insert Arrangement (IAW MIL-STD-1698)

Filter Type (See Table II)

Flange Mounting Style
H *- Not Applicable for This Shell Size*

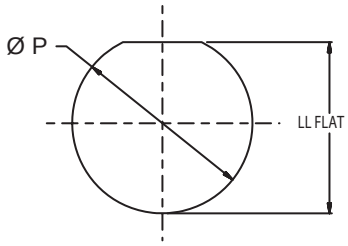

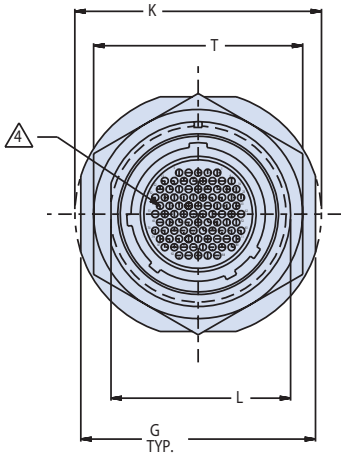

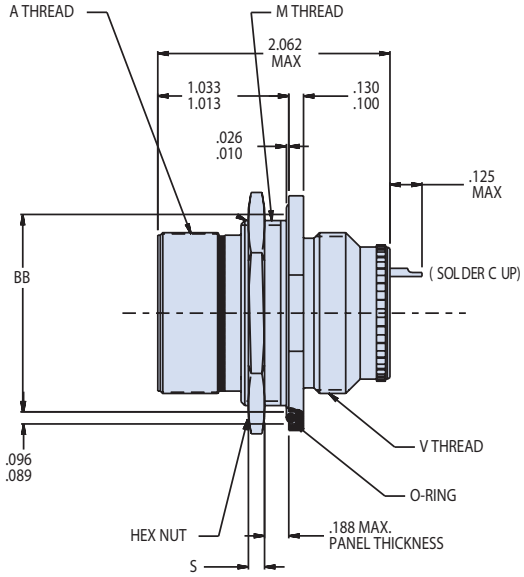

Filter Type	
P	PI-Section
C	C-Section

Class	PI-Section (pF)	C-Section (pF)
X	160,000 - 240,000	80,000 - 120,000
Y	80,000 - 120,000	40,000 - 60,000
Z	60,00 - 91,000	30,000 - 45,000
A	38,000 - 56,000	19,000 - 28,000
B	32,000 - 45,000	16,000 - 22,500
C	18,000 - 33,000	9,000 - 16,500
D	8,000 - 12,000	4,000 - 6,000
E	3,300 - 5,000	1,650 - 2,500
F	800 - 1,300	400 - 650
G	400 - 600	200 - 300

Symbol	Material	Finish Description
M	Aluminum	Electroless Nickel
MT	Aluminum	Nickel-PTFE, *1000 Hour Grey™*
NF	Aluminum	Cadmium O.D. over Electroless Nickel
P	Stainless Steel	Electrodeposited Nickel

© 2013 Glenair, Inc.
CAGE Code 06324
Printed in U.S.A.

240-288J
Filtered Jam Nut Mount Receptacle
MIL-DTL-28840 Type

Military Shell Size	Shell Size	A Thread Class 2A	G	K Dia.	L Across Flat	M Thread Class 2A
A	11	.750-.1P-.2L-D.S.	1.274 1.254	1.368 1.348	.841 .832	.875-20 UNEF
B	13	.875-.1P-.2L-D.S.	1.399 1.379	1.508 1.488	.966 .957	1.000-20 UNEF
C	15	1.062-.1P-.2L-D.S.	1.587 1.567	1.681 1.661	1.153 1.144	1.187-18 UNEF
D	17	1.125-.1P-.2L-D.S.	1.649 1.629	1.743 1.723	1.216 1.207	1.250-18 UNEF
E	19	1.312-.1P-.2L-D.S.	1.837 1.817	1.931 1.911	1.403 1.394	1.437-18 UNEF
F	23	1.500-.1P-.2L-D.S.	2.024 2.004	2.118 2.098	1.591 1.582	1.625-18 UNEF
G	25	1.625-.1P-.2L-D.S.	2.149 2.129	2.243 2.223	1.716 1.707	1.750-18 UNS
H	29	1.812-.1P-.2L-D.S.	2.337 2.317	2.435 2.415	1.903 1.894	1.937-16 UN
J	33	2.000-.1P-.2L-D.S.	2.524 2.504	2.618 2.598	2.091 2.082	2.125-16 UN

Military Shell Size	Shell Size	V Thread Class 2A	BB Dia.	S Nominal	T ± .017	P Dia.	LL Flat
A	11	.750-20 UNEF	.979 .969	.125	1.062	.890 .880	.853 .843
B	13	.875-20 UNEF	1.104 1.094		1.188	1.015 1.005	.978 .968
C	15	1.000-20 UNEF	1.292 1.282		1.375	1.203 1.193	1.165 1.155
D	17	1.125-18 UNEF	1.354 1.344		1.438	1.265 1.255	1.228 1.218
E	19	1.250-18 UNEF	1.542 1.532		1.625	1.453 1.443	1.415 1.405
F	23	1.437-18 UNEF	1.729 1.719		1.812	1.640 1.630	1.603 1.593
G	25	1.562-18 UNEF	1.854 1.844	.189	2.000	1.765 1.755	1.728 1.718
H	29	1.875-16 UN	2.042 2.032		2.188	1.953 1.943	1.915 1.905
J	33	2.062-16 UNS	2.229 2.219		2.375	2.140 2.130	1.103 2.093

© 2013 Glenair, Inc.

GLENAIR, INC. • 1211 AIR WAY • GLENDALE, CA 91201-2497 • 818-247-6000 • FAX 818-500-9912
www.glenair.com E-Mail: sales@glenair.com

947-128
Bulkhead Feedthrough Receptacle
Wall Mount • MIL-DTL-28840 Type

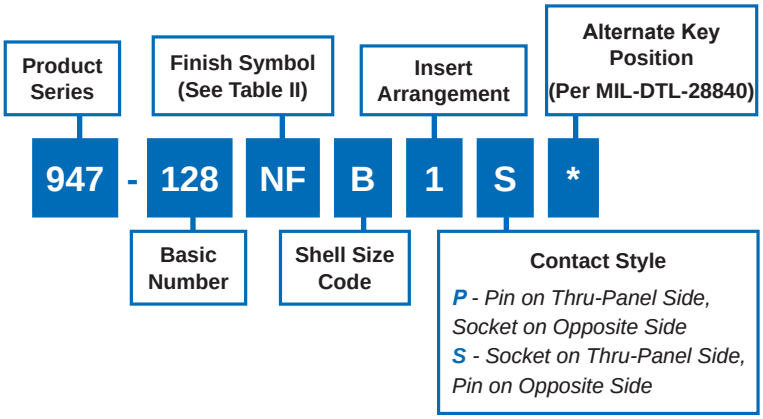

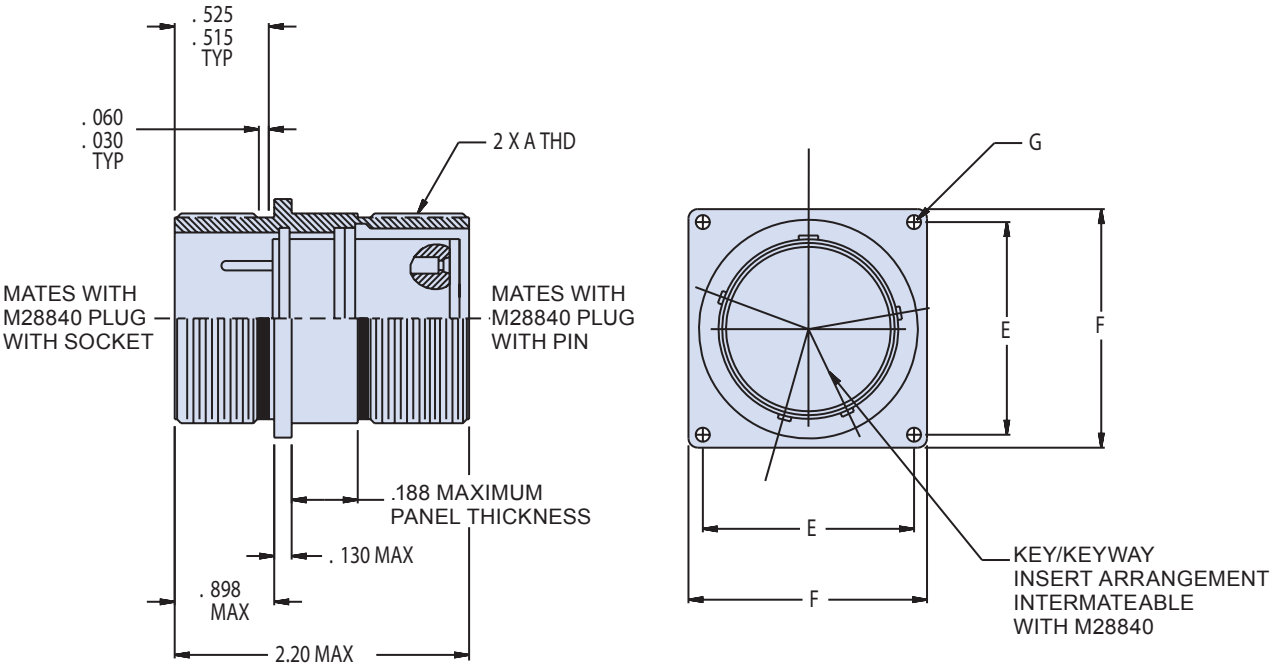

© 2013 Glenair, Inc. CAGE Code 06324 Printed in U.S.A.

947-128
Bulkhead Feedthrough Receptacle
Wall Mount • MIL-DTL-28840 Type

Symbol	Material	Finish Description
NF	Aluminum	Cadmium O.D. over Electroless Nickel
ZN		Zinc Nickel
MT		Nickel-PTFE, *1000 Hour Grey™*
Z1	316 Type Stainless Steel	Passivate
ZU		Black Cadmium Olive Drab over Nickel

Military Shell Size	Shell Size	Insert Arrangement Dash Number	A Thread Class 2A	E BSC	F Max.	G Dia. Max.
A	11	A-1	.750-.1P-.2L-D.S.	.750	1.039	.130
B	13	B-1	.875-.1P-.2L-D.S.	.843	1.154	
C	15	C-1	1.062-.1P-.2L-D.S.	.968	1.274	
D	17	D-1	1.125-.1P-.2L-D.S.	1.015	1.399	
E	19	E-1	1.312-.1P-.2L-D.S.	1.140	1.524	
F	23	F-1	1.500-.1P-.2L-D.S.	1.281	1.734	
G	25	G-1	1.625-.1P-.2L-D.S.	1.392	1.834	.157
H	29	H-1	1.812-.1P-.2L-D.S.	1.568	2.154	
J	33	J-1	2.000-.1P-.2L-D.S.	1.734	2.344	.183

© 2013 Glenair, Inc.

GLENAIR, INC. • 1211 AIR WAY • GLENDALE, CA 91201-2497 • 818-247-6000 • FAX 818-500-9912
www.glenair.com E-Mail: sales@glenair.com

947-229
Bulkhead Feedthrough Receptacle
Jam Nut Mount • MIL-DTL-28840 Type

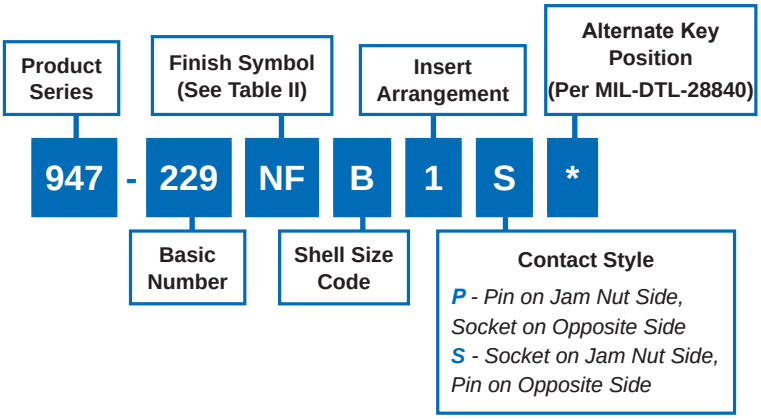

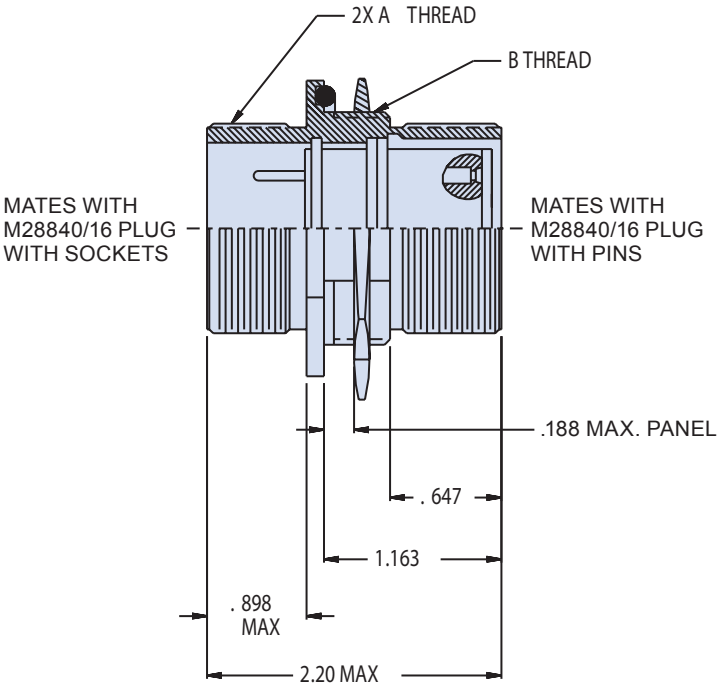

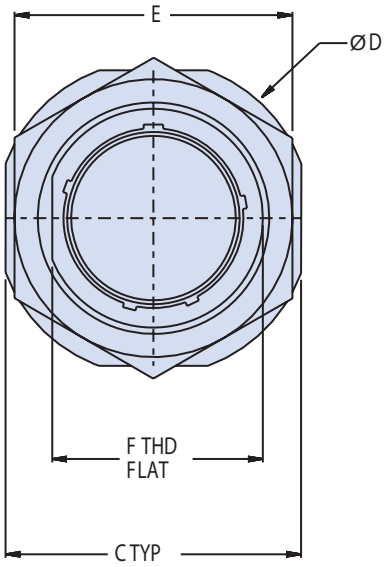

© 2013 Glenair, Inc.

GLENAIR, INC. • 1211 AIR WAY • GLENDALE, CA 91201-2497 • 818-247-6000 • FAX 818-500-9912
www.glenair.com
E-Mail: sales@glenair.com

947-229
Bulkhead Feedthrough Receptacle
Jam Nut Mount • MIL-DTL-28840 Type

Symbol	Material	Finish Description
NF	Aluminum	Cadmium O.D. over Electroless Nickel
ZN		Zinc Nickel
MT		Nickel-PTFE, *1000 Hour Grey™*
Z1	316 Type Stainless Steel	Passivate
ZU		Black Cadmium Olive Drab over Nickel

Military Shell Size	Shell Size	Insert Arrangement Dash Number	A Thread Class 2A	B Thread Class 2A	C Flats	D Dia.	E Hex	F Thread Flat
A	11	A-1	.750-.1P-.2L-D.S.	.875-20 UNEF	1.264	1.358	1.062	.836
B	13	B-1	.875-.1P-.2L-D.S.	1.000-20 UNEF	1.389	1.498	1.188	.962
C	15	C-1	1.062-.1P-.2L-D.S.	1.187-18 UNEF	1.577	1.671	1.375	1.149
D	17	D-1	1.125-.1P-.2L-D.S.	1.250-18 UNEF	1.639	1.733	1.438	1.212
E	19	E-1	1.312-.1P-.2L-D.S.	1.437-18 UNEF	1.827	1.921	1.625	1.399
F	23	F-1	1.500-.1P-.2L-D.S.	1.625-18 UNF	2.014	2.108	1.812	1.587
G	25	G-1	1.625-.1P-.2L-D.S.	1.750-18 UNS	2.139	2.233	2.000	1.708
H	29	H-1	1.812-.1P-.2L-D.S.	1.937-16 UN	2.327	2.425	2.188	1.898
J	33	J-1	2.000-.1P-.2L-D.S.	2.125-16 UN	2.514	2.608	2.375	2.086

© 2013 Glenair, Inc. CAGE Code 06324 Printed in U.S.A.

930-006
Wall Mount Receptacle Mounting Gasket
for MIL-DTL-28840 Connectors

Glenair®

Product Series		Basic Number	Material Symbol (See Table II)	Shell Size (See Table I)
930	-	006	F	13

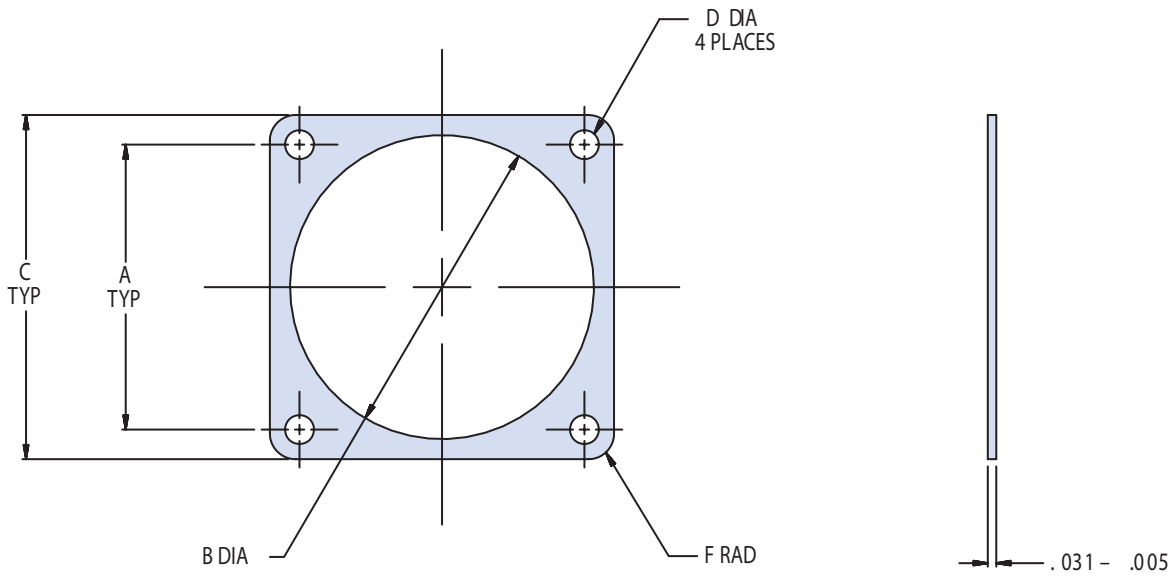

Symbol	Material Description
F	Fluorosilicone
M	Silver Plated Glass Filled Silicone
N	Neoprene

Shell Size	A ± .010	B Dia. +.016 -.000	C .016 -.000	D Dia. ± .010	F Radius ± .010
11	.750	.750	1.023	.120	.141
13	.843	.875	1.138		
15	.968	1.062	1.258		
17	1.015	1.125	1.383		.156
19	1.140	1.312	1.508		.172
23	1.281	1.500	1.718		.188
25	1.392	1.625	1.818	.147	
29	1.568	1.875	2.138		.219
33	1.734	2.062	2.328	.173	

© 2013 Glenair, Inc.

GLENAIR, INC. • 1211 AIR WAY • GLENDALE, CA 91201-2497 • 818-247-6000 • FAX 818-500-9912
www.glenair.com
E-Mail: sales@glenair.com

941-002
Sav-Con® Environmental Connector Saver
for MIL-DTL-28840 Connectors

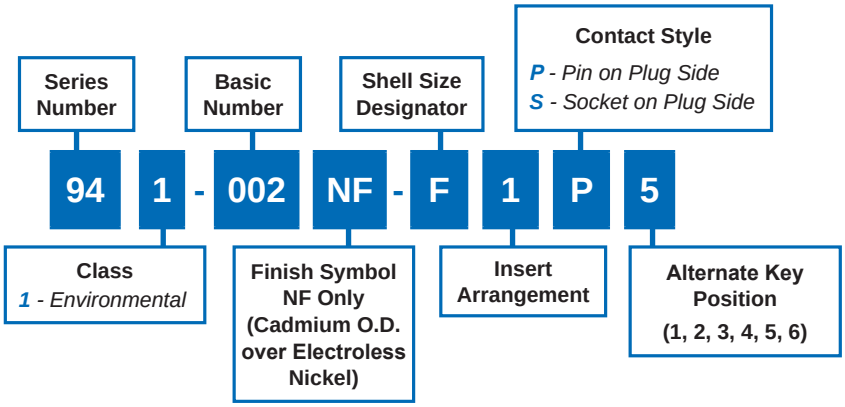

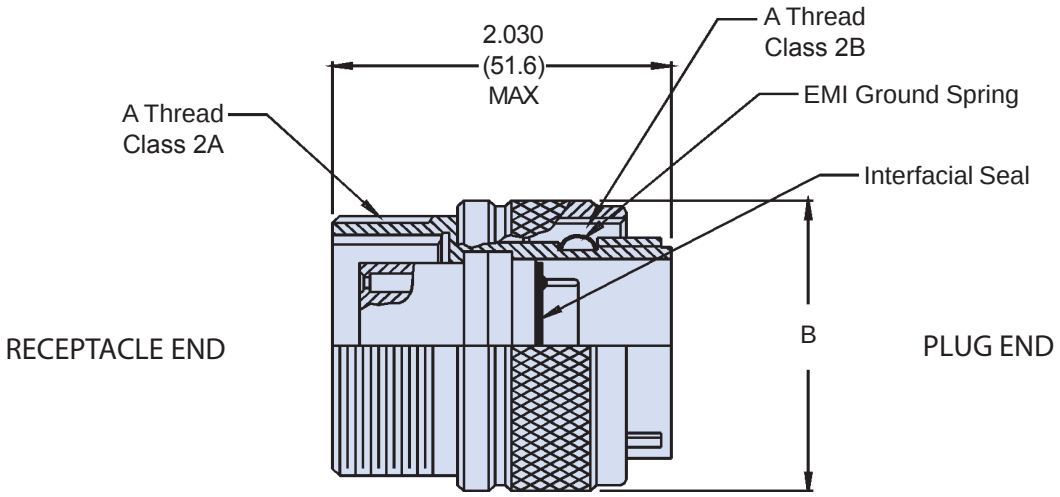

Insert Arrangement Dash Number	Shell Size	A Thread Class 2*	B Max	Contact Size 20 Quantity
A-1	11	.750-.1P-.2L-D.S.	1.028 (26.1)	7
B-1	13	.875-.1P-.2L-D.S.	1.141 (29.0)	12
C-1	15	1.062-.1P-.2L-D.S.	1.263 (32.1)	21
D-1	17	1.125-.1P-.2L-D.S.	1.387 (35.2)	31
E-1	19	1.312-.1P-.2L-D.S.	1.513 (38.4)	42
F-1	23	1.500-.1P-.2L-D.S.	1.703 (43.3)	64
G-1	25	1.625-.1P-.2L-D.S.	1.825 (46.4)	92
H-1	29	1.812-.1P-.2L-D.S.	2.143 (54.4)	121
J-1	33	2.000-.1P-.2L-D.S.	2.329 (59.2)	155

© 2013 Glenair, Inc. CAGE Code 06324 Printed in U.S.A.

TG70
Strap Wrench Assembly Tool
for Use with MIL-DTL-28840 Connectors

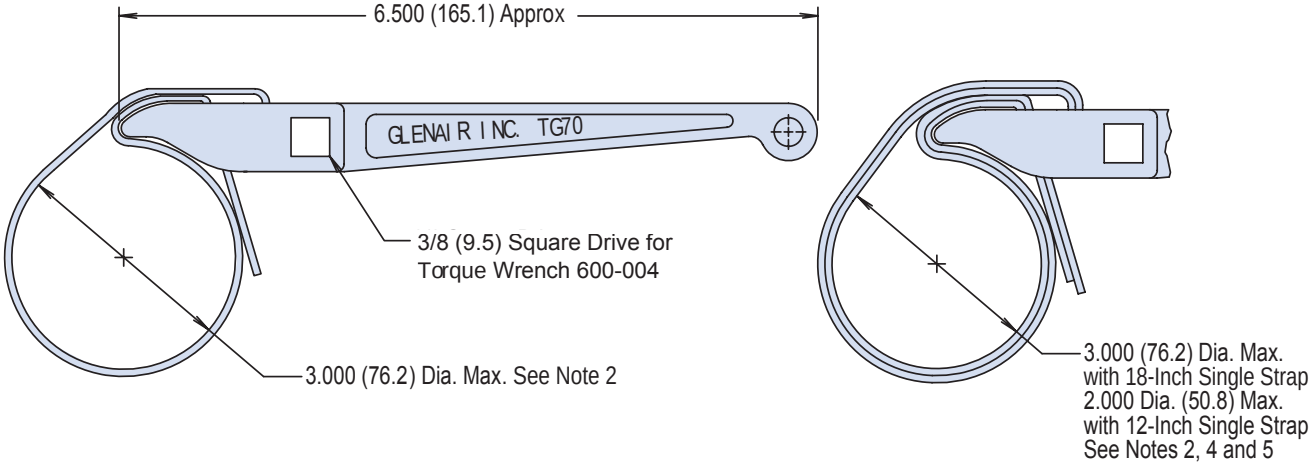

Basic Part Number	Torque Wrench (Omit for None)	
TG70	1	18

Strap Length in Inches (See Notes2 and 4)
Lengths Available: 12, 18, 24 and 36-Inch Only
Standard length is 12 Inches,
Omit Dash Number for Standard

APPLICATION NOTES

1. These wrenches are made of the following materials:
   Wrench Handle - Aluminum Alloy/Nickel Plate.
   Wedge - Stainless Steel/Passivated.
   Strap - Impregnated Fabric. Straps are 1/2 inch (12.7) in width.
2. Replacement straps are available. Specify part number G70515-xx for 12, 18, 24 or 36-inch strap. 24 and 36 inch for double wrap.
3. Metric dimensions (mm) are indicated in parentheses.
4. Double wrap as shown for heavy duty range.
5. Not recommended for composite coupling nuts (use 600-091 or 600-157).

VARIANCE CHART
TG-70 Strap Wrench Used with Glenair Torque Wrenches

Accessory Shell Size	Recommended Installation Torque: Light/Medium Duty ± 5 Inch Pounds — TG70 Torque	Light/Medium Duty ± 5 Inch Pounds — Part Torque	Heavy Duty ± 5 Inch Pounds — TG70 Torque	Heavy Duty ± 5 Inch Pounds — Part Torque
08/09	28	35	45	60
10/11	28	35	70	80
12/13	30	40	75	110 [80]
14/15	30	40	75	120 [80]
16/17	30	40	75	120 [80]
18/19	30	40	75	120 [80]
20/21	75	80	95	140 [100]
22/23	75	80	120*	140
24/25	75	80	120*	140
28			135*	150
32			150*	150
36			150*	150

* TG70 Not Recommended For Values of 120 Inch Lbs. or Greater.

VARIANCE CHART NOTES

1. Recommended installation torque is approximately 80% of MIL-C-85049 accessory thread strength values.
2. Heavy duty installation torque values may be difficult to attain with the TG70 Strap Wrench; the values shown in brackets [ ] are the maximum attainable with the TG70 Strap Wrench using a single wrap.
3. Glenair recommends using 600 series torque tools whenever possible. When torque loading exceeds 75 inch pounds, or to attain the heavy duty torque values shown, a double wrap strap provides suitable friction to achieve torque values.
4. Glenair recomends that heavy duty torque values be directly read through the connector shell body with the use of 600-005 connectors holding tools.

© 2013 Glenair, Inc. CAGE Code 06324 Printed in U.S.A.

TG69 and TG82
Soft Jaw Pliers and Strap Wrench Assembly Tool
for Use with MIL-DTL-28840 Connectors

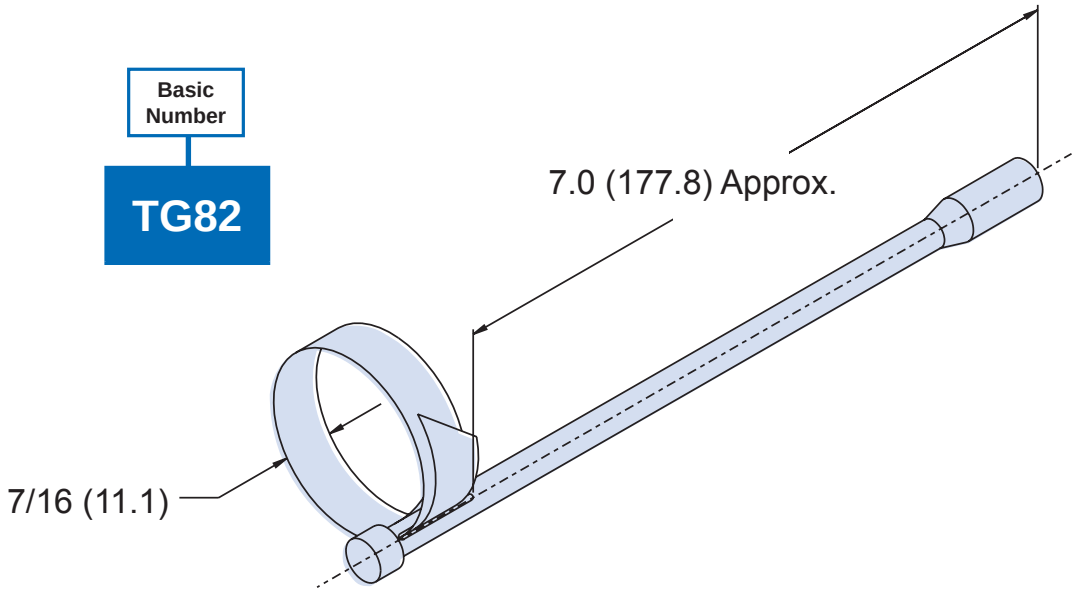

APPLICATION NOTES

1. Metric dimensions (mm) are in parentheses and are for reference only.
2. 2.50 (63.5) Max Capacity; Not recommended for composite coupling nuts (use 600-091 or 600-157)
3. 1/4 Inch Drive
4. The replacement strap part number is G62748-11. Consult Factory for other lengths.

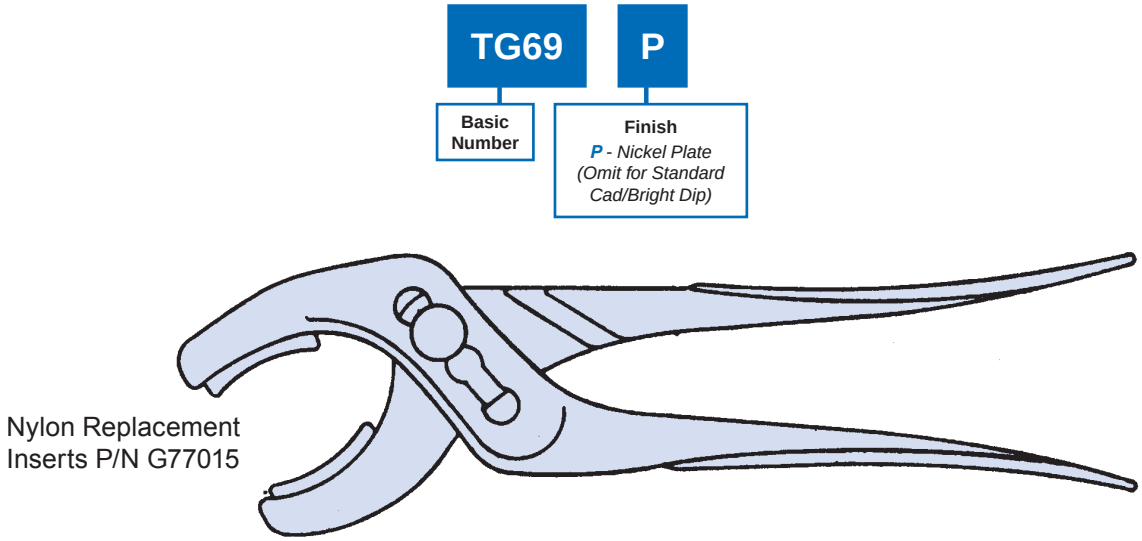

© 2013 Glenair, Inc. CAGE Code 06324 Printed in U.S.A.

Qualified MIL-PRF-28876 connectors for shipboard use

Glenair's qualified MIL-PRF-29504/14 and /15 termini and MIL-PRF-28876 connectors, plus backshells and dust cap accessories are ready for deployment in shipboard, surface and submarine applications, as well as mission-critical combat communication systems such as mobile tactical shelters. They are specifically geared for upgrade and retrofit applications where extending system life-cycles and reducing cost of ownership are principal requirements.

Product No.	Description	Page No.
Fiber Optic Termini		
181-039	M29504/14 Fiber Optic Pin Terminus, Size 16	C-3
181-040	M29504/15 Fiber Optic Socket Terminus, Size 16	C-4
181-051	M29504/3 Fiber Optic Dummy Terminus, Size 16	C-5
Fiber Optic Connectors		
180-040	M28876 Square Flange Wall Mount Receptacle Connector	C-10
180-040	M28876 Jam Nut Mount Receptacle Connector	C-12
180-040	M28876 In-Line Receptacle Connector	C-14
180-040	M28876 Plug Connector	C-14
Panel Gaskets, Backshells , Adapters and Dust Covers		
M28840/24	MIL-Spec Wall Mount Gasket	C-17
930-006	Commercial Wall Mount Gasket	C-17
189-015	Environmental Banding Backshell	C-18
189-001	Fiber Optic Backshell with Split Clamp	C-20
189-007	Fiber-Con Backshell	C-22
189-009	Banding Backshell/Molding Adapter	C-24
189-014	PEEK Convoluted Tubing Backshell	C-26
660-072/073	Dust Covers	C-28

Catalog Notes

Metric dimensions appear in parentheses in diagrams and tables, based on 1 inch = 25.4 mm, for reference only.
Unless otherwise specified, the following other dimensional tolerances apply:

.xx = ± .03 (0.8) • .xxx = ± .015 (0.4) • Angles = ± 5°

© 2013 Glenair, Inc.

GLENAIR, INC. • 1211 AIR WAY • GLENDALE, CA 91201-2497 • 818-247-6000 • FAX 818-500-9912
www.glenair.com E-Mail: sales@glenair.com

MIL-PRF-28876 QPL
Connector Performance Specifications

Test Description	Performance Requirements/Specifications
Optical Insertion Loss, Multimode	-0.3 dB Typical (62.5/125)
Optical Insertion Loss, Singlemode	-0.3 dB Typical (9/125)
Optical Back Reflection, Singlemode	Better than -40 dB - PC Polish Better than -50 dB - Enhanced PC Polish
Operating Temperature	-28°C to +65°C using MIL-Spec Qualified Epoxy and Cable, or -55°C to +125°C using alternative Epoxy and Cable (consult factory)
Temperature (Thermal) Shock	-40°C to +70°C, 5 Cycles, per TIA/EIA-455-71, Test Schedule C
Temperature Cycling	-28°C to +65°C, 5 Cycles, per TIA/EIA-455-3
Temperature/Humidity Cycling	-10°C to +65°C, 10 Cycles, 240 hours, 98% RH, per TIA/EIA-455-5, Test Method B
Temperature Life Aging	+110°C, 240 hours, Dry Air, per TIA/EIA-455-4
Mating Durability	500 cycles, per TIA/EIA-455-21
Vibration - Sinusoidal	10 g Peak, 5-500 Hz, 12 Cycles (3 hours) per Axis at Ambient Temperature, per TIA/EIA-455-11, Test Condition II
Vibration - Random	10.2 g RMS, 50-2000 Hz, 30 minutes per Axis at Ambient Temperature, per TIA/EIA-455-11, Test Condition VII-C
Mechanical Shock (High Impact)	Per MIL-S-901, Lightweight, Grade A, Class I (Hammer Shock)
Impact	8 Drops from 8 feet, per TIA/EIA-455-2, Test Method B
Crush Resistance	281 lbs, 7 Loading Cycles, per TIA/EIA-455-26
External Bending Moment	300 inch-lbs min for 1 minute
Cable Pull Out Force - Termini	22 lbs min for 1 minute, per TIA/EIA-455-6
Cable Pull Out Force - Connector	162 lbs min for 10 minutes, per TIA/EIA-455-6
Cable Seal Flexing	180° Flex, 200 Cycles, per TIA/EIA-455-1
Cable Twist	360°±180° Twist, 50 Cycles, 11 lbs min Tension, per TIA/EIA-455-36
Ozone Exposure	150 ppm for 2 hours at +70°C, per TIA/EIA-455-189
Fungus Resistance	28 days at +30°C, 95% RH, per TIA/EIA-455-56
Fluid Immersion	Turbine Fuel, Isopropyl Alcohol, Hydraulic Fluid, Lubricating Oil, Coolant, Tap Water, and Seawater, 24 hour immersion duration, per TIA/EIA-455-12
Water Pressure	Equivalent depth of 32 feet for 48 hours at +10°C to +35°C
Freezing Water	1 hour, per TIA/EIA-455-98, Test Method A, Procedure 1
Corrosion Resistance (Salt Spray)	500 hours at +35°C, per TIA/EIA-455-16, Test Condition I
Sand and Dust	12 hours, per TIA/EIA-455-35
Flammability	0.75 inch flame for 10 seconds mated, 1.50 inch flame for 60 seconds unmated, per EIA/ECA-364-81

* Performance Specifications/Requirements based on the use of MIL-PRF-24792 Epoxy and MIL-PRF-85045 Simplex and Breakout Shipboard Optical Fiber.

© 2013 Glenair, Inc. CAGE Code 06324 Printed in U.S.A.

M29504/14 • 181-039
Size 16 Fiber Optic Pin Terminus
for MIL-PRF-28876 Connectors

M28876 QPL

Size 16 M29504/14 fiber optic pin terminus for MIL-PRF-28876 connectors

Table I: Part Number				
Mil-Spec Part Number	ØA (Microns)	Fiber Type	Fiber Size Core/Cladding (Microns)	Commercial Part Number
M29504/14-4140C	125.0	Single Mode	9/125	181-039-1250C
Not listed in Mil-Spec	125.5	Single Mode	9/125	181-039-1255C
M29504/14-4141C	126.0	Single Mode	9/125	181-039-1260C
M29504/14-4131C	126.0	Multi Mode	50/125, 62.5/125	181-039-1260C
M29504/14-4132C	127.0	Multi Mode	50/125, 62.5/125	181-039-1270C
M29504/14-4135C	142.0	Multi Mode	100/140	181-039-1420C
Consult factory for additional sizes and QPL status.				

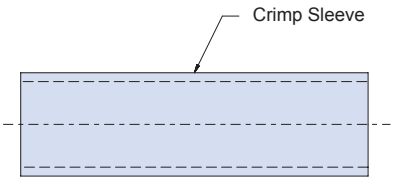

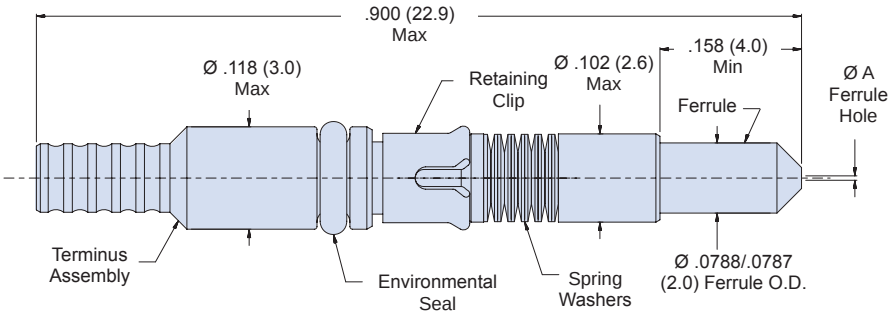

Table II: Tools and Accessories	
Part Number	Description
265-008	Crimp Sleeve Ø2.4mm Max Jacket (Mil-Spec Type)
182-012	Crimp Tool
182-013	Insertion Tool, Straight
182-014	Insertion Tool, 90°
182-015	Removal Tool
182-035	Hand Polishing Tool

Material and Finish

Ferrule: Zirconia Ceramic
Terminus Assembly: Stainless Steel/ Passivate
Retaining Clip, Spring Washers: Spring Alloy
Seal: Fluorosilicone
Crimp Sleeve: Brass Alloy/Nickel

Notes

- Crimp sleeve is supplied with terminus assembly and may be ordered separately (see Table II). For terminus less crimp sleeve, omit **C** from end of part number.
- See Glenair GAP-036 for termination procedure and assembly tools.
- Dummy terminus part number: 181-051 or M29504/3-4038.

© 2013 Glenair, Inc. CAGE Code 06324 Printed in U.S.A.

M29504/15 • 181-040
Size 16 Fiber Optic Socket Terminus
for MIL-PRF-28876 Connectors

M28876 QPL

Size 16 M29504/15 fiber optic socket terminus for MIL-PRF-28876 connectors

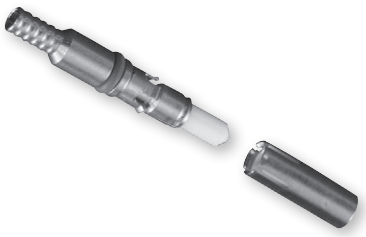

Table I: Part Number				
Mil-Spec Part Number	ØA (Microns)	Fiber Type	Fiber Size Core/Cladding (Microns)	Commercial Part Number
M29504/15-4180C	125.0	Single Mode	9/125	181-040-1250C
Not listed in Mil-Spec	125.5	Single Mode	9/125	181-040-1255C
M29504/15-4181C	126.0	Single Mode	9/125	181-040-1260C
M29504/15-4171C	126.0	Multi Mode	50/125, 62.5/125	181-040-1260C
M29504/15-4172C	127.0	Multi Mode	50/125, 62.5/125	181-040-1270C
M29504/15-4175C	142.0	Multi Mode	100/140	181-040-1420C
Consult factory for additional sizes and QPL status.				

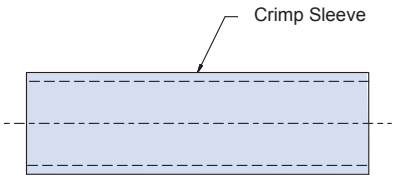

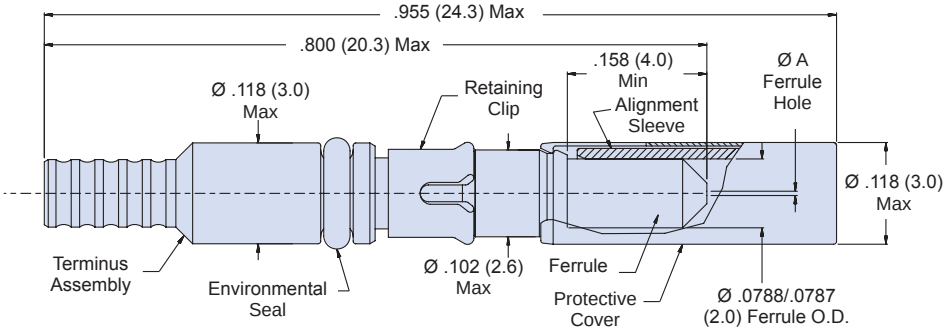

Table II: Tools and Accessories	
Part Number	Description
265-008	Crimp Sleeve Ø 2.4mm Max Jacket (Mil-Spec Type)
265-010	Alignment Sleeve Assembly
182-012	Crimp Tool
182-013	Insertion Tool, Straight
182-014	Insertion Tool, 90°
182-015	Removal Tool
182-016	Alignment Sleeve Assembly Insertion/Removal Tool
182-035	Hand Polishing Tool

Material and Finish

Alignment Sleeve, Ferrule: Zirconia Ceramic
Protective cover: Spring Alloy / Nickel
Terminus Assembly: Stainless Steel / Passivate
Retaining Clip: Spring Alloy
Seal: Fluorosilicone
Crimp Sleeve: Brass Alloy / Nickel

Notes

- Crimp sleeve is supplied with terminus assembly and may be ordered separately (see Table II). For terminus less crimp sleeve omit **C** from end of part number.
- Alignment sleeve assembly is supplied with terminus assembly (packaged loose) and may be ordered separately (see Table II). For terminus less alignment sleeve assembly, add **N** to end of part number (e.g. 181-040-1260C**N**).
- See Glenair GAP-036 for termination procedure and assembly tools.
- Dummy Terminus: Part Number 181-051 or M29504/3-4038.

© 2013 Glenair, Inc. CAGE Code 06324 Printed in U.S.A.

M29504/3 • 181-051
Size 16 Dummy Terminus
for MIL-PRF-28876 Connectors

M28876 QPL

Size 16 M29504/3 fiber optic dummy terminus for MIL-PRF-28876 connectors

Table I: Part Number	
Mil-Spec Part Number	Commercial Part Number
M29504/3-4038	181-051

Table II: Tools and Accessories	
Part Number	Description
182-013	Insertion Tool, Straight
182-014	Insertion Tool, 90°
182-015	Removal Tool

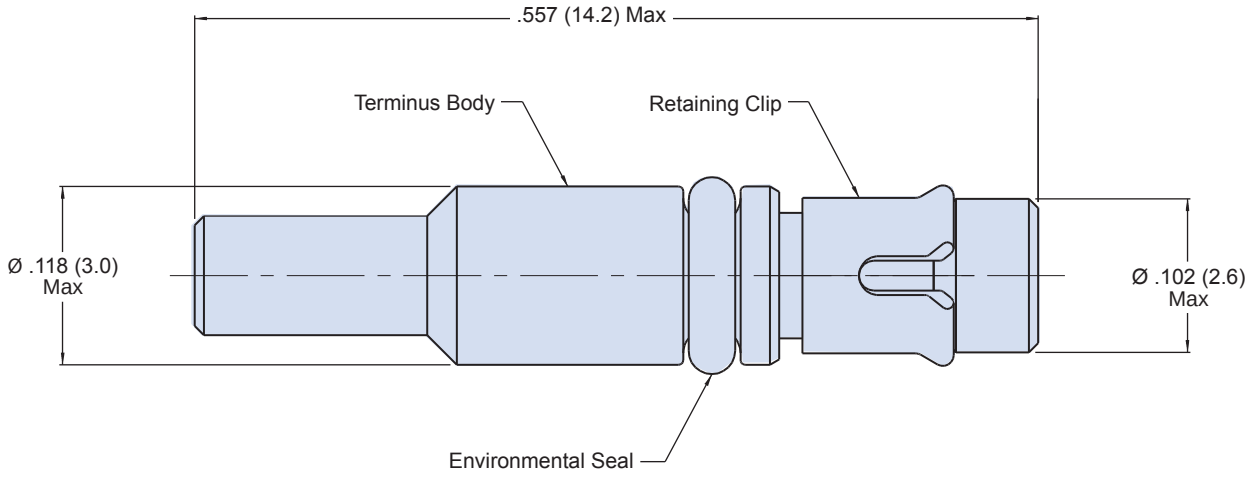

Material and Finish
Terminus Body: Stainless Steel/Passivate
Retaining Clip: Spring Alloy
Seal: Fluorosilicone

Notes
See Glenair GAP-036 for assembly tools and procedures.

© 2013 Glenair, Inc. CAGE Code 06324 Printed in U.S.A.

MIL-PRF-28876 • 180-040
QPL Fiber Optic Connectors
How to Order

M28876 QPL

Military QPL M28876/1 through /14 fiber optic connectors

M28876/7 C 1 1 P 1 N

- **Connector Type** *(Table IV)*
- **Shell Size** *(Table II)*
- **Insert Arrangement Number** *(Table II)*
- **Backshell Designator** *(Cable Entry Size) Omit for Non-Backshell Connectors (See Table V)*
- **Terminus Style** *P = Pin* *S = Socket*
- **Keying Position 1 thru 6** *(Table III)*
- ***N* = Not Supplied with Backnut** ***Omit* = Supplied with Backnut** *Applies to connector assembly selections that do not include a backshell. (See Table IV). N facilitates the use of non-integral backshells by exposing accessory threds*
- **Materials and Finish** *Note: All M28876 Part Numbers are supplied standard with Cadmium Plate, Olive Drab (1000 Hrs. Salt Spray) over Aluminum Alloy.*

Glenair commercial equivalent MIL-PRF-28876 type fiber optic connectors

180-040 NF 16 - 15 - 08 - 1 - 1 P N

- **Product Series and Basic Number**
- **Material/ Finish Code** *(Table I)*
- **Connector Type** *(Table IV)*
- **Shell Size** *(Table II)*
- **Number of Terminus Cavities** *(Table II)*
- **Backshell Designator** *(Cable Entry Size) Omit for Non-Backshell Connectors (See Table V)*
- **Keying Position 0 thru 6** *(Table III)*
- **Terminus Style** *P = Pin* *S = Socket*
- ***N* = Not Supplied with Backnut** ***Omit* = Supplied with Backnut** *Applies to connector assembly selections that do not includea backshell. (See Table IV)*
- **Materials and Finish** *Additional material/finish options are available. Consult factory.*

© 2013 Glenair, Inc. CAGE Code 06324 Printed in U.S.A.

GLENAIR, INC. • 1211 AIR WAY • GLENDALE, CA 91201-2497 • 818-247-6000 • FAX 818-500-9912
www.glenair.com E-Mail: sales@glenair.com

MIL-PRF-28876 • 180-040
QPL Fiber Optic Connectors
How to Order

Table I: Material and Finish (Commercial)		
Code	Material	Finish Description
M	Aluminum Alloy	Electroless Nickel
NF		Cadmium, Olive Drab
MT*		Nickel-PTFE, Grey
ZR		Zinc-Nickel, Black

Refer to Appendix for material/finish details

Table II: Shell Size and Insert Arrangement			
Mil-Spec		Commercial	
Shell Size	Insert Arrangement	Shell Size	Number of Cavities
A	1	11	02
B	1	13	04
C	2	15	06
	1		08
F	2	23	18
	1		31

Consult factory for QPL status

Table IV: Connector Type			
Connector Type	Backshell Type	MIL-Spec	Commercial
Wall Mount Receptacle	None	M28876/1	03
	Straight	M28876/2	13
	45°	M28876/3	23
	90°	M28876/4	33
In-Line Receptacle	Straight	M28876/5	15
Plug	None	M28876/6	06
	Straight	M28876/7	16
	45°	M28876/8	26
	90°	M28876/9	36
Jam Nut Receptacle	None	M28876/11	04
	Straight	M28876/12	14
	45°	M28876/13	24
	90°	M28876/14	34

Table V: Backshell Designator				
Backshell Designator	Max Allowable Cable Diameter by Shell Size			
	A (11)	B (13)	C (15)	F (23)
1	.250 (6.4)	.285 (7.2)	.500 (12.7)	.866 (22.0)
2	.346 (8.8)	.346 (8.8)	.250 (6.4)	1.000 (25.4)
3		.453 (11.5)	.375 (9.5)	.600 (15.2)

Material and Finish

A. M28876 part numbers supplied standard with Cad plate/olive drab over aluminum alloy. See Table I for commercial plating options.
B. Hardware: Aluminum alloy/chem film, stainless steel/passivate
C. Insert: Aluminum alloy/anodize
D. Seals: Fluorosilicone

Notes

Termini (Not Supplied with Connector):
M29504/14 - Pin terminus, MIL-Spec
M29504/15 - Socket Terminus, MIL-Spec
M29504/3 - Dummy Terminus, MIL-Spec
181-039 - Pin Terminus, MIL-Spec Style
181-040 - Socket terminus, MIL-Spec Style
181-051 - Dummy Terminus MIL-Spec Style
Backnut retained using thread-locking compound.
Consult factory for appropriate termination and assembly tools/procedures.
Operating Temperature Range: -55° to +125°C.

Dimensions in Inches (millimeters) are subject to change without notice.

© 2013 Glenair, Inc. CAGE Code 06324 Printed in U.S.A.

M28876 • 180-040
MIL-PRF-28876 Fiber Optic Connectors
Key Positions

Key Positions for MIL-PRF-28876 (180-040) fiber optic connectors

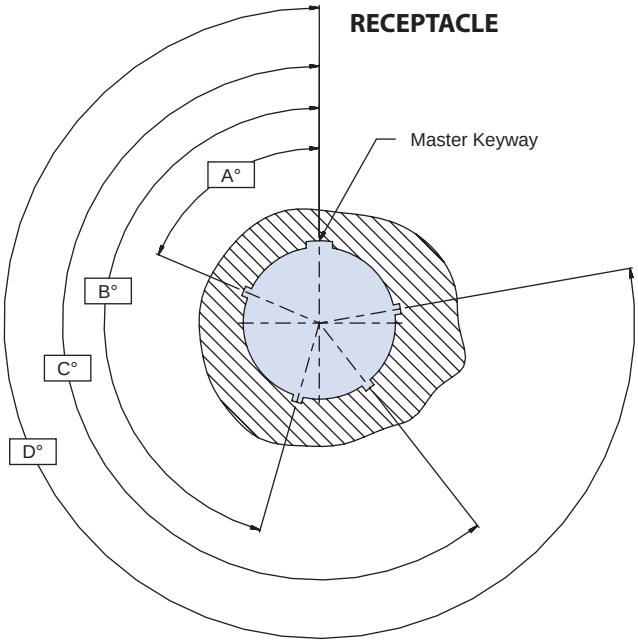

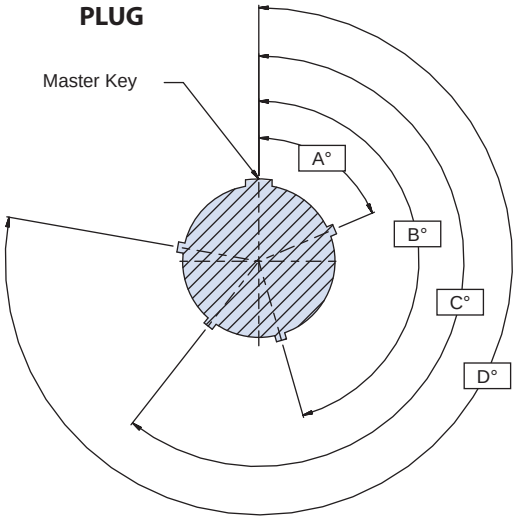

Table III: Keying Position

Shell Size	Key Position	A°	B°	C°	D°
11 and 13	0*	-	-	-	-
	1	95	141	208	236
	2	113	156	182	292
	3	90	145	195	252
	4	53	156	220	255
	5	119	146	176	298
	6	51	141	184	242
15 and 23	0*	-	-	-	-
	1	80	142	196	293
	2	135	170	200	310
	3	49	169	200	244
	4	66	140	200	257
	5	62	145	180	280
	6	79	153	197	272

*0 indicates universal keying arrangement and is available on commercial equivalent plug connector only.

© 2013 Glenair, Inc. CAGE Code 06324 Printed in U.S.A.

Insert arrangements for MIL-PRF-28876 (180-040) fiber optic connectors

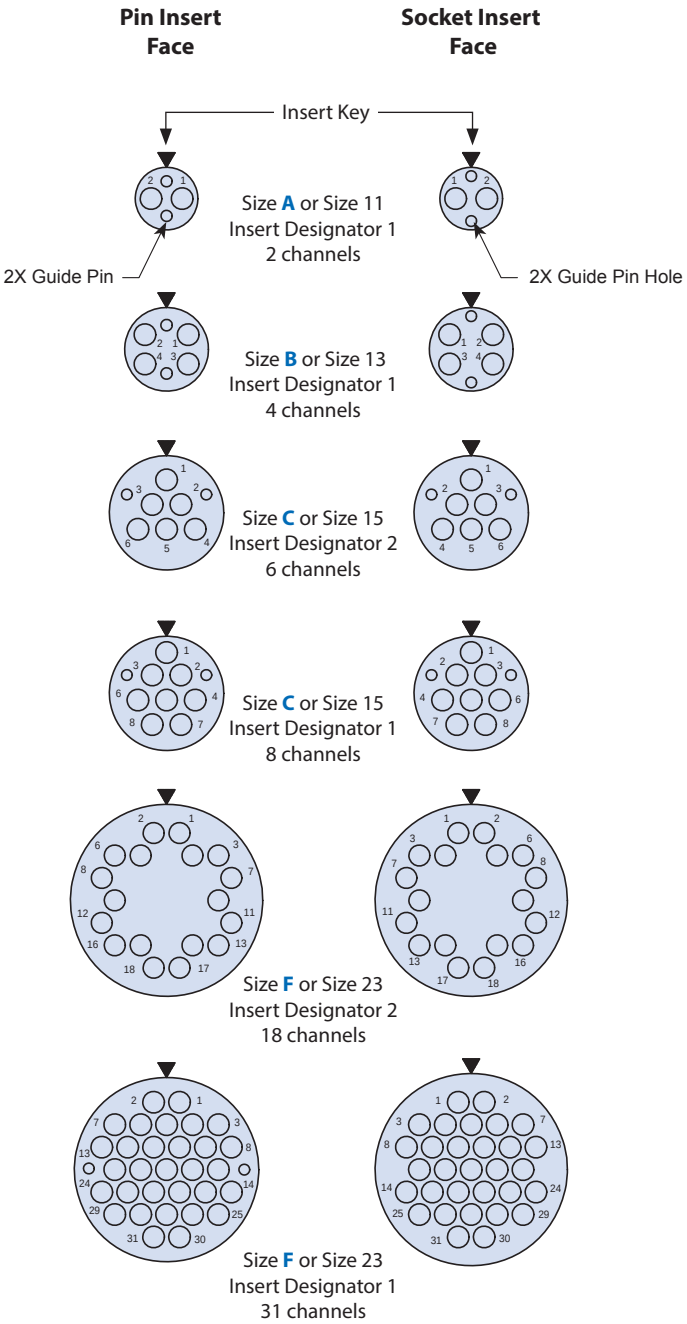

© 2013 Glenair, Inc.

GLENAIR, INC. • 1211 AIR WAY • GLENDALE, CA 91201-2497 • 818-247-6000 • FAX 818-500-9912
www.glenair.com
E-Mail: sales@glenair.com

M28876 (/1, /2, /3, /4) • 180-040 (-03, -13, -23, -33)
MIL-PRF-28876 Wall Mount Receptacle Connector
for use with MIL-PRF-29504/14 and /15 Termini

M28876 QPL

MIL-PRF-28876 QPL wall mount receptacle connector

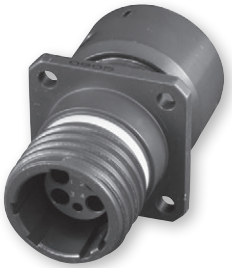

Receptacle without backshell

Receptacle with straight backshell

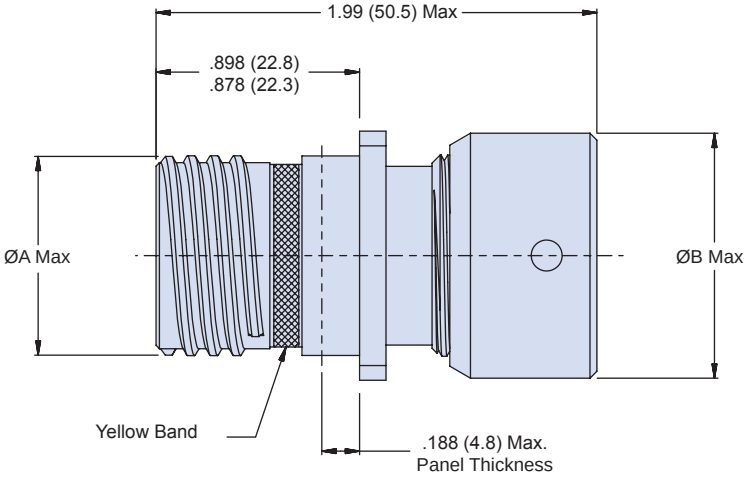

M28876/1 • 180-040(-03)
WALL MOUNT RECEPTACLE WITHOUT BACKSHELL

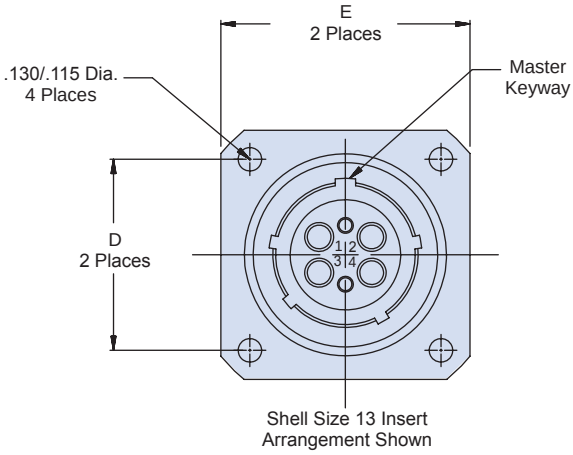

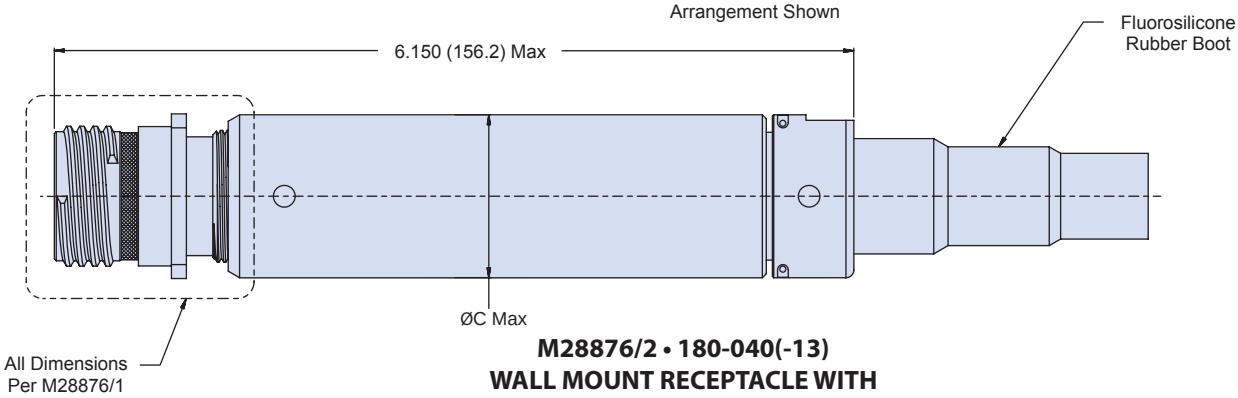

M28876/2 • 180-040(-13)
WALL MOUNT RECEPTACLE WITH
STRAIGHT BACKSHELL

© 2013 Glenair, Inc. CAGE Code 06324 Printed in U.S.A.

M28876 (/1, /2, /3, /4) • 180-040 (-03, -13, -23, -33)
MIL-PRF-28876 Wall Mount Receptacle Connector
for use with MIL-PRF-29504/14 and /15 Termini

Table I									
Shell Size	ØA Max	ØB Max	ØC Max	D	E ±.020	F Max.	G Max.	H Max.	J Max.
11	0.750 (19.1)	0.960 (24.4)	0.960 (24.4)	0.750 (19.1)	1.022 (26.0)	6.150 (156.2)	3.540 (89.9)	4.250 (108.0)	4.250 (108.0)
13	0.875 (22.2)	1.085 (27.6)	1.085 (27.6)	0.843 (21.4)	1.137 (28.9)	6.220 (158.0)	3.580 (90.9)	4.250 (108.0)	4.250 (108.0)
15	1.062 (27.0)	1.255 (31.9)	1.257 (31.9)	0.968 (24.6)	1.257 (31.9)	6.500 (165.1)	3.850 (97.8)	4.500 (114.3)	4.500 (114.3)
23	1.500 (38.1)	1.695 (43.1)	1.763 (44.8)	1.281 (32.5)	1.718 (43.6)	7.500 (190.5)	5.000 (127.0)	5.000 (127.0)	5.000 (127.0)

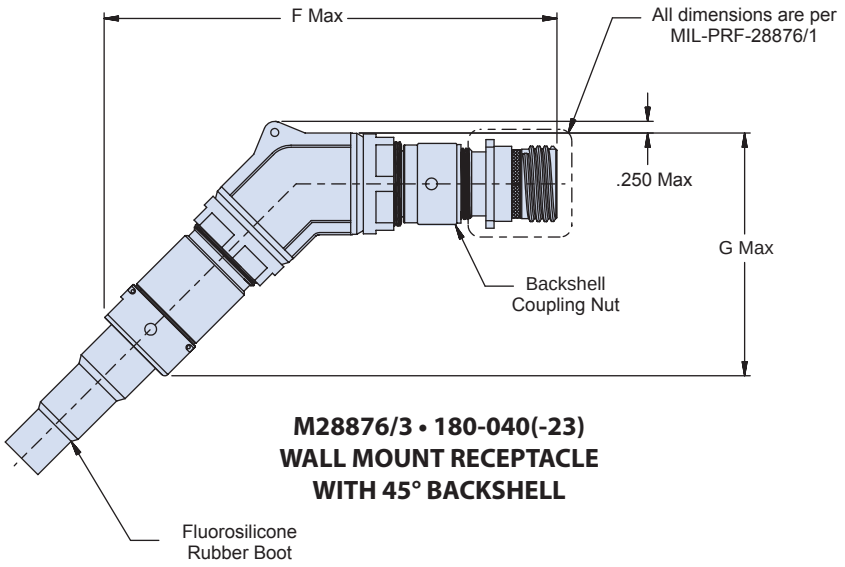

M28876/3 • 180-040(-23)
WALL MOUNT RECEPTACLE
WITH 45° BACKSHELL

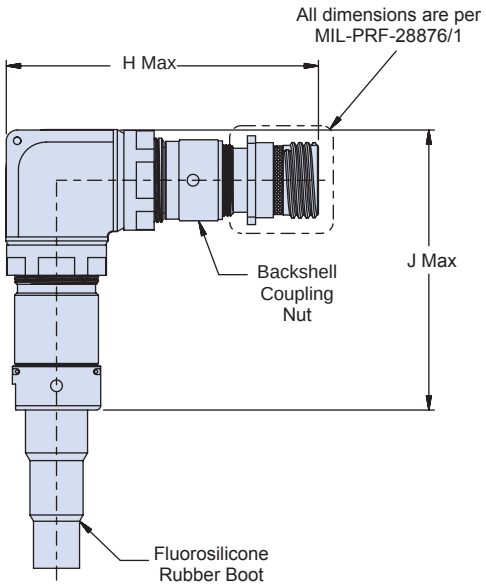

M28876/4 • 180-040(-33)
WALL MOUNT RECEPTACLE WITH
90° BACKSHELL

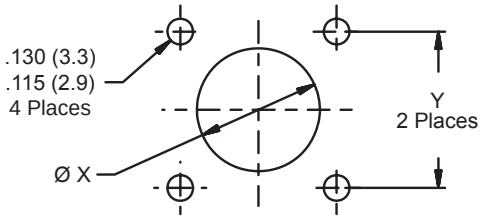

Recommended Panel Cutout
(Wall Mounting)

Table II		
Shell Size	Ø X ± .005 (0.13)	Y ± .005 (0.13)
11	.812 (20.6)	.750 (19.1)
13	.937 (23.8)	.843 (21.4)
15	1.124 (28.6)	.968 (24.6)
23	1.562 (39.7)	1.281 (32.5)

© 2013 Glenair, Inc.

GLENAIR, INC. • 1211 AIR WAY • GLENDALE, CA 91201-2497 • 818-247-6000 • FAX 818-500-9912
www.glenair.com
E-Mail: sales@glenair.com

180-040 (-04, -14, -24, -34)
MIL-PRF-28876 Jam Nut Mount Receptacle Connector
for use with MIL-PRF-29504/14 and /15 Termini

M28876

MIL-PRF-28876 QPL jam nut receptacle connector

Receptacle without backshell

Table I

Shell Size	G Max	H ± .010 (0.3)	J ± .005 (0.1)	Ø K ± .005 (0.1)	Ø C Max	Ø L Max	ØA Max
11	1.290 (32.8)	1.264 (32.1)	.848 (21.5)	.885 (22.5)	.960 (24.4)	.960 (24.4)	.750 (19.1)
13	1.435 (35.9)	1.389 (35.3)	.973 (24.7)	1.010 (25.7)	1.085 (27.6)	1.085 (27.6)	.875 (22.2)
15	1.650 (41.9)	1.577 (40.1)	1.160 (29.5)	1.198 (30.4)	1.255 (31.9)	1.255 (31.9)	1.062 (27.0)
23	2.093 (53.2)	2.004 (50.9)	1.593 (40.5)	1.635 (41.5)	1.695 (43.1)	1.763 (44.8)	1.500 (38.1)

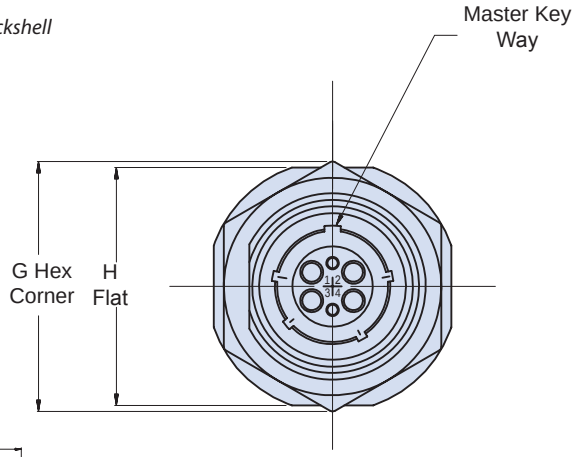

SHELL SIZE 13 INSERT ARRANGEMENT SHOWN

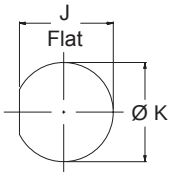

Recommended Panel Cutout
(Jam Nut Mounting)
As Viewed from Face of Panel

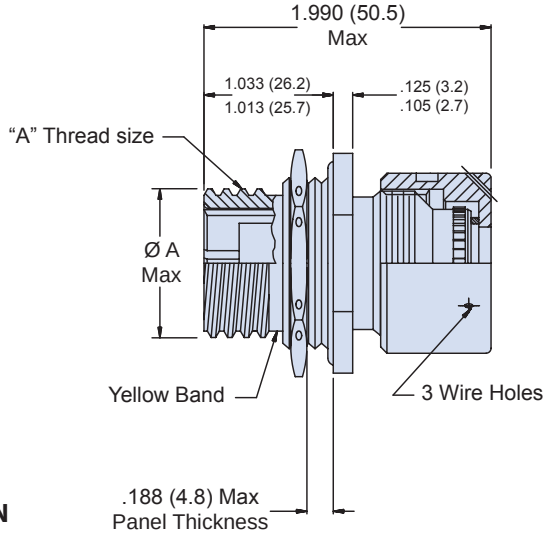

04 - JAM NUT MOUNT RECEPTACLE WITHOUT BACKSHELL
M28876/11 • 180-040 (-04)

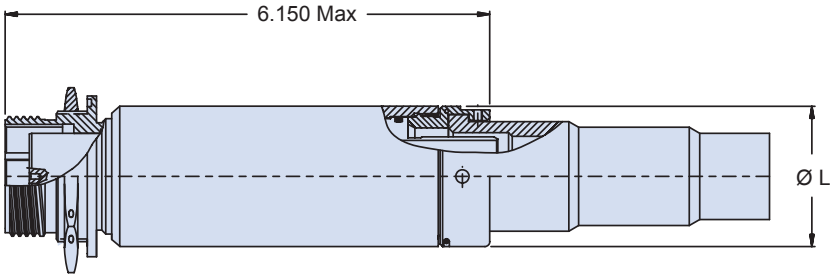

M28876/12 • 180-040 (-14) JAM NUT MOUNT RECEPTACLE WITH STRAIGTH BACKSHELL

© 2013 Glenair, Inc.

GLENAIR, INC. • 1211 AIR WAY • GLENDALE, CA 91201-2497 • 818-247-6000 • FAX 818-500-9912
www.glenair.com
E-Mail: sales@glenair.com

180-040 (-04, -14, -24, -34)
MIL-PRF-28876 Jam Nut Mount Receptacle Connector
for use with MIL-PRF-29504/14 and /15 Termini

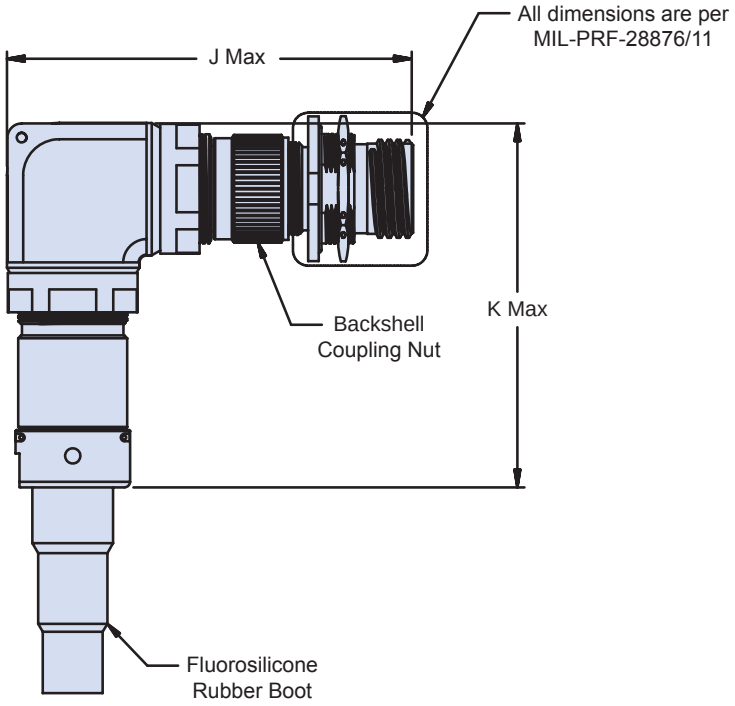

M28876/14 180-040 (-34) JAM NUT MOUNT, WITH 90° BACKSHELL, RECEPTACLE

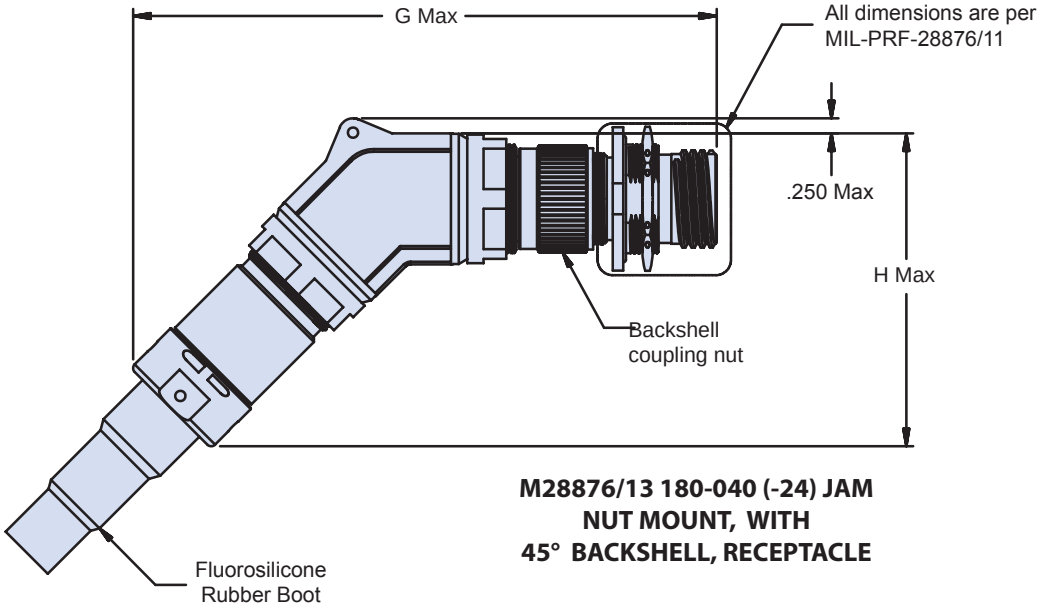

M28876/13 180-040 (-24) JAM NUT MOUNT, WITH 45° BACKSHELL, RECEPTACLE

© 2013 Glenair, Inc.

M28876 (/6, /7, /8, /9) • 180-040 (-06, -16, -26, -36)
MIL-PRF-28876 Plug Connector
for use with MIL-PRF-29504/14 and /15 Termini

M28876 QPL

MIL-PRF-28876 QPL plug connector

Plug without backshell

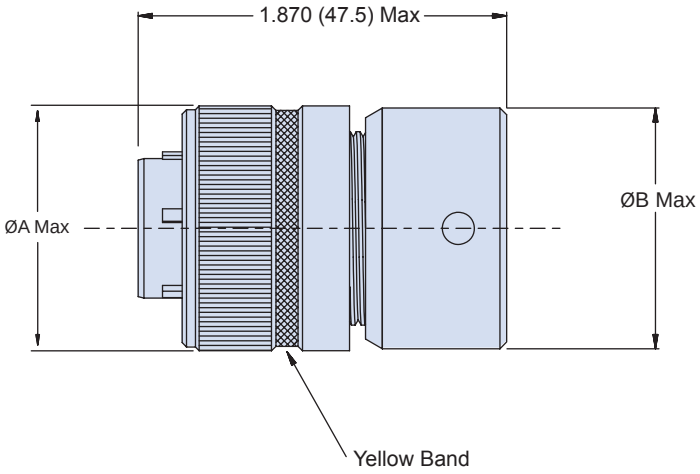

M28876/6 • 180-040 (-06)
PLUG WITHOUT BACKSHELL

Plug with straight backshell

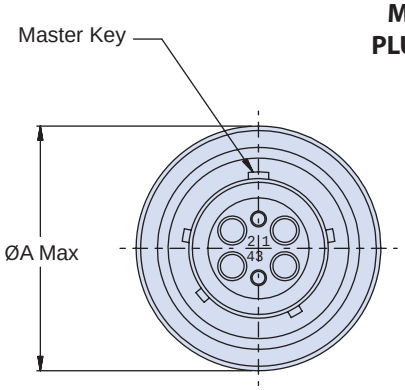

Shell Size 13 Insert
ArrangementShown

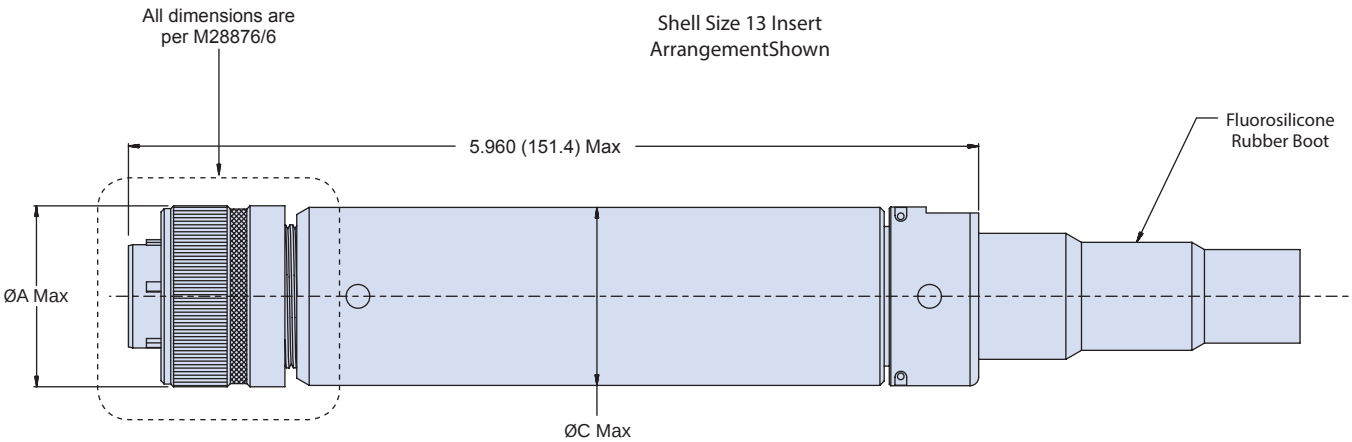

M28876/7 • 180-040 (-16) PLUG WITH STRAIGHT BACKSHELL

© 2013 Glenair, Inc. CAGE Code 06324 Printed in U.S.A.

M28876 (/6, /7, /8, /9) • 180-040 (-06, -16, -26, -36)
MIL-PRF-28876 Plug Connector
for use with MIL-PRF-29504/14 and /15 Termini

Table I

Shell Size	ØA Max	ØB Max	ØC Max	D Max	E Max	F Max	G Max.
11	1.028 (26.1)	0.960 (24.4)	0.960 (24.4)	6.090 (154.7)	3.540 (89.9)	4.190 (106.4)	4.250 (108.0)
13	1.141 (29.0)	1.085 (27.6)	1.085 (27.6)	6.160 (156.5)	3.580 (90.9)	4.190 (106.4)	4.250 (108.0)
15	1.263 (32.1)	1.255 (31.9)	1.255 (31.9)	6.440 (163.6)	3.850 (97.8)	4.440 (112.8)	4.500 (114.3)
23	1.705 (43.3)	1.695 (43.1)	1.763 (44.8)	7.350 (186.7)	5.000 (127.0)	4.850 (123.2)	5.000 (127.0)

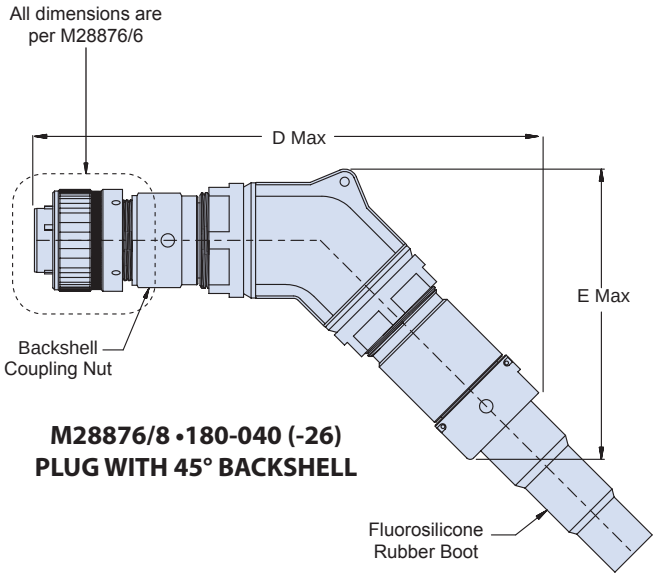

M28876/8 •180-040 (-26)
PLUG WITH 45° BACKSHELL

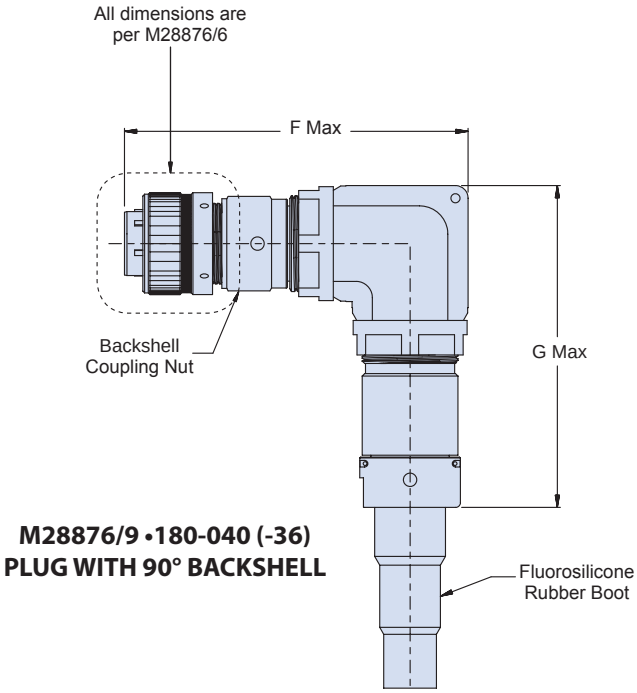

M28876/9 •180-040 (-36)
PLUG WITH 90° BACKSHELL

© 2013 Glenair, Inc.

GLENAIR, INC. • 1211 AIR WAY • GLENDALE, CA 91201-2497 • 818-247-6000 • FAX 818-500-9912
www.glenair.com
E-Mail: sales@glenair.com

M28876/5
In-Line Receptacle
for use with MIL-PRF-29504/14 and /15 Termini

M28876 QPL

MIL-PRF-28876 QPL in-line receptacle connector

Table I				
Shell Size	ØA Max	ØB Max	ØC Max	D
11	0.750 (19.1)	0.960 (24.4)	0.963 (24.5)	0.768 (19.5)
13	0.875 (22.2)	1.085 (27.6)	1.088 (27.6)	0.893 (22.7)
15	1.062 (27.0)	1.255 (31.9)	1.275 (32.4)	1.080 (27.4)
23	1.500 (38.1)	1.763 (44.8)	1.719 (43.7)	1.518 (38.6)

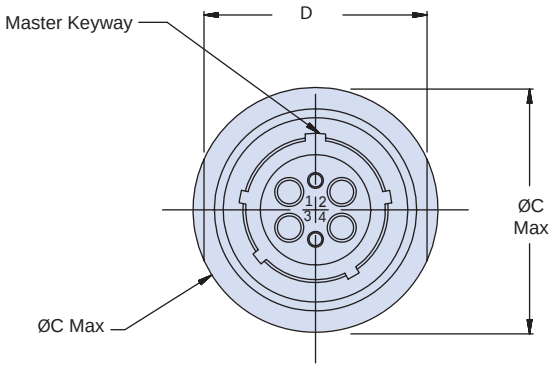

Shell Size 13 Insert
Arrangement Shown

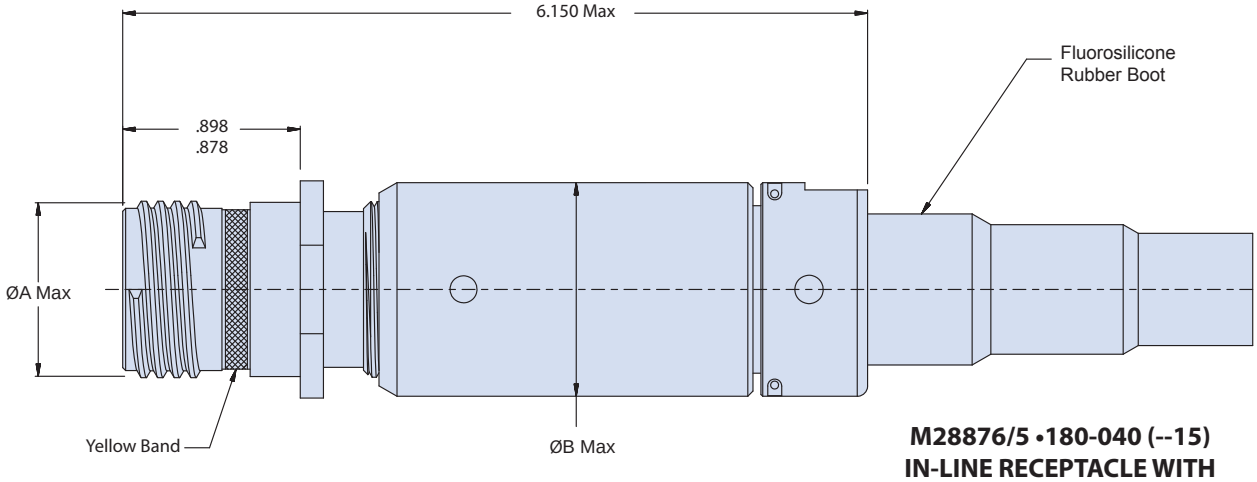

M28876/5 •180-040 (--15)
IN-LINE RECEPTACLE WITH
STRAIGHT BACKSHELL

© 2013 Glenair, Inc.
CAGE Code 06324
Printed in U.S.A.

M28840 /24 and 930-006
Square Flange Wall Mount Receptacle Panel Gaskets
for use with MIL-PRF-28876 (/1, /2, /3, /4) and 180-040 (-03, -13, -23, -33) Commercial Connectors

Glenair®

MIL-PRF square flange wall mount receptacle panel gasket

Military Designator	Shell Size	Material Designator
		A - Fluorosilicone B - EMI
M28840/24	B	A

Shell Size	A	B Dia.	C	D Dia.
A (11)	.760 (19.30) .740 (18.80)	.766 (19.46) .750 (19.05)	1.039 (26.39) 1.023 (25.98)	.130 (3.30) .110 (2.79)
B (13)	.853 (21.67) .833 (21.16)	.891 (22.63) .875 (22.22)	1.154 (29.31) 1.138 (28.90)	
C (15)	.978 (24.84) .958 (24.33)	1.078 (27.38) 1.062 (26.97)	1.274 (32.36) 1.258 (31.95)	
F (23)	1.291 (32.79) 1.271 (32.28)	1.516 (38.51) 1.500 (38.10)	1.734 (44.04) 1.718 (43.64)	

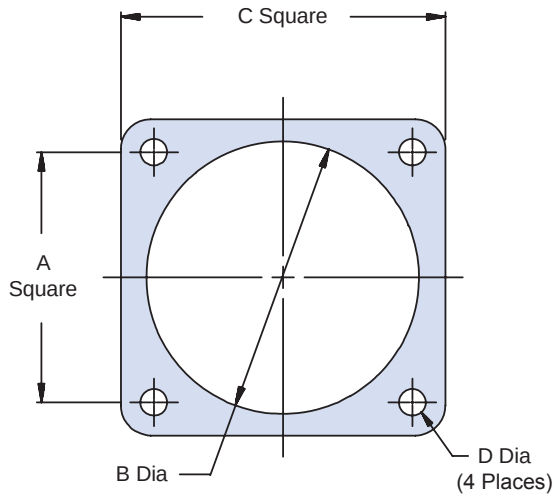

Commercial equivalent square flange wall mount receptacle panel gasket

Table I: Material	
Symbol	**Material Description**
F	Fluorosilicone
M	Silver Plated Glass Filled Silicone (EMI)
N	Neoprene

Product Series		Basic Number	Material Symbol (Table I)	Shell Size
930	-	006	F	13

Shell Size	A ± .010	Ø B +.016 -.000	C +.016 -.000	Ø D ± .010	F Radius ± .010
11	.750	.750	1.023	.120	.141
13	.843	.875	1.138		
15	.968	1.062	1.258		
23	1.281	1.500	1.718		.188

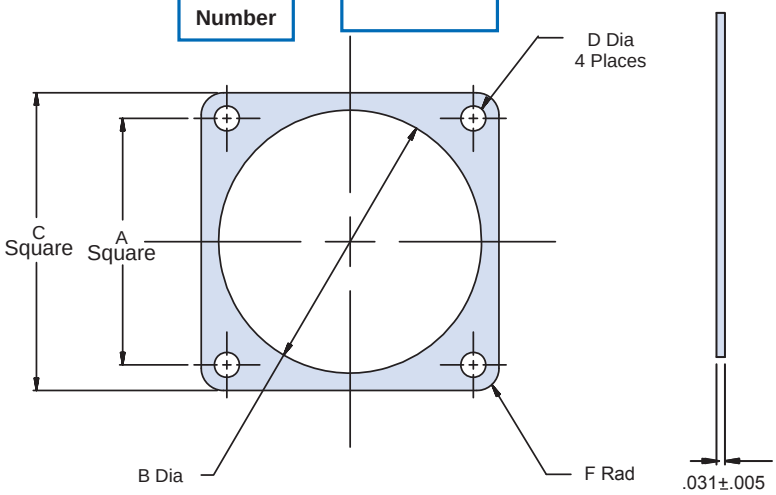

© 2013 Glenair, Inc.
CAGE Code 06324
Printed in U.S.A.

189-015
Environmental Banding Backshell
for Multichannel M85045 Shipboard Fiber Optic Cable for Use with MIL-PRF-28876 or Glenair 180-040 Connectors

MIL-PRF-28876 and 189-015 banding backshell

How To Order

Product Series	Basic No.	Material/ Finish (Table II)	Shell Size (Table I)	Dash No. (Table III)	Length In 1/2 Inch Increments (Example: 3 = 1.5 Inches)	Band 600-052 Supplied (Omit If Not Required)
189	015	NF	13	05	3	B

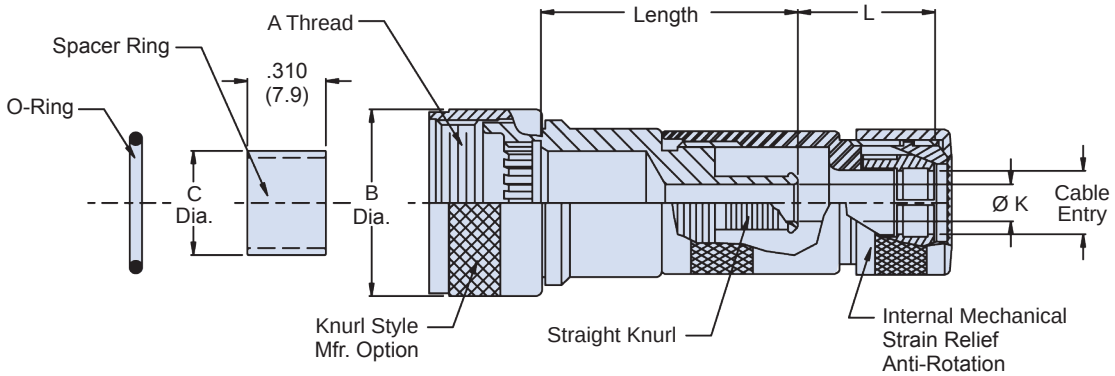

Material and Plating

Adapter, Coupling Nut, Spacer Ring see Table II
Clamp Components: Ryton R 4XT-Black, Ultem 1000-Natural
Anti-Rotation Device: Torlon 42031-Natural
O-Ring: Fluorosilicone

Notes

Glenair 600 Series Backshell assembly tools are recommended for assembly and installation.
Standard minimum length: 1.5 inches, for shorter length consult factory.
Spacer Ring and O-Ring are packaged loose and must be installed with Connector at time of assembly. The spacer is utilized to retain the terminus Insert.
For Shield termination see Glenair drawing 600-050 & 600-052.
Consult factory for larger cable size.
MIL-I-32053/4 & /5 Shrink sleeve to be packaged loose in a plastic bag.
MIL-I-32053/4 Shrink Sleeving to be heat shrink over rear of Adapter before MIL-I-32053/5 Shrink Sleeving.
For assembly instructions, see GAP-064

© 2013 Glenair, Inc. CAGE Code 06324 Printed in U.S.A.

189-015
Environmental Banding Backshell
for Multichannel M85045 Shipboard Fiber Optic Cable for Use with MIL-PRF-28876 or Glenair 180-040 Connectors

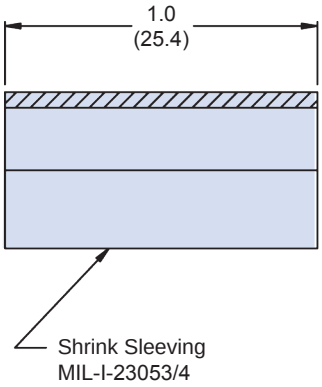

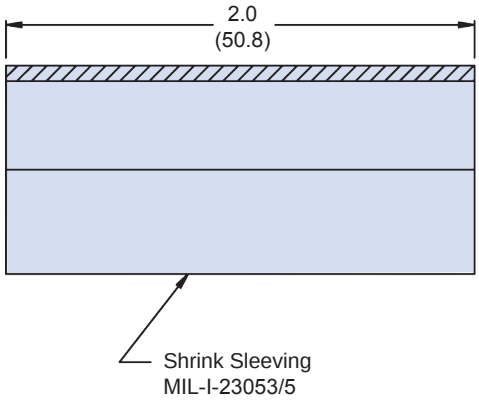

Table I

Shell Size	Designator (Ref)	A Thread Class 2B	B Max	C Max	Max Dash Number
11	A	3/4 -20 UNEF	1.028 (26.1)	.410 (10.4)	05
13	B	7/8 -20 UNEF	1.141 (29.0)	.532 (13.5)	05
15	C	1 -20 UNEF	1.263 (32.1)	.710 (18.0)	07
23	F	1-7/16 -18 UNEF	1.703 (43.3)	1.116 (28.3)	13

Table II: Material and Finish

Code	Material	Finish Description
M	Aluminum Alloy	Electroless Nickel
NF		Cadmium/Olive Drab Over Electroless Nickel (500 hour salt spray)

Refer to Appendix for material/finish details

Table III: Cable Entry And Shrink Sleeve Dash Number

Dash No.	Clamp Size	Cable Dia Max	K Dia ±.005 (0.1)	L Max	MIL-I-23053 Shrink Sleeve	MIL-I-23053 Shrink Sleeve	Cable Entry Dia	
							Minimum	Maximum
05	12	.280 (7.1)	.312 (7.9)	1.11 (28.2)	/4-203-0	/5-107-0	.233 (5.2)	.375 (9.5)
07	16	.395 (10.0)	.438 (11.1)	1.21 (30.7)	/4-204-0	/5-108-0	.358 (8.3)	.500 (12.7)
09	20	.510 (13.0)	.562 (14.3)	1.21 (30.7)	/4-204-0	/5-109-0	.482 (11.5)	.625 (15.9)
11	24	.621 (15.8)	.688 (17.5)	1.21 (30.7)	/4-205-0	/5-106-0	.545 (13.1)	.750 (19.1)
13	28	.736 (18.7)	.812 (20.6)	1.36 (34.5)	/4-205-0	/5-110-0	.670 (16.3)	.875 (22.2)

© 2013 Glenair, Inc. CAGE Code 06324 Printed in U.S.A.

189-001
Fiber Optic Backshell With Split Clamp
MIL-PRF-28876 Environmental

MIL-PRF-28876 fiber optic backshell

How To Order

Product Series	Material/ Finish (Table I)	Angular Function		
		S = Straight *R* = 90° *P* = 45°		
189 -	001	NF	13	S
	Basic No.		Shell Size (Table II)	

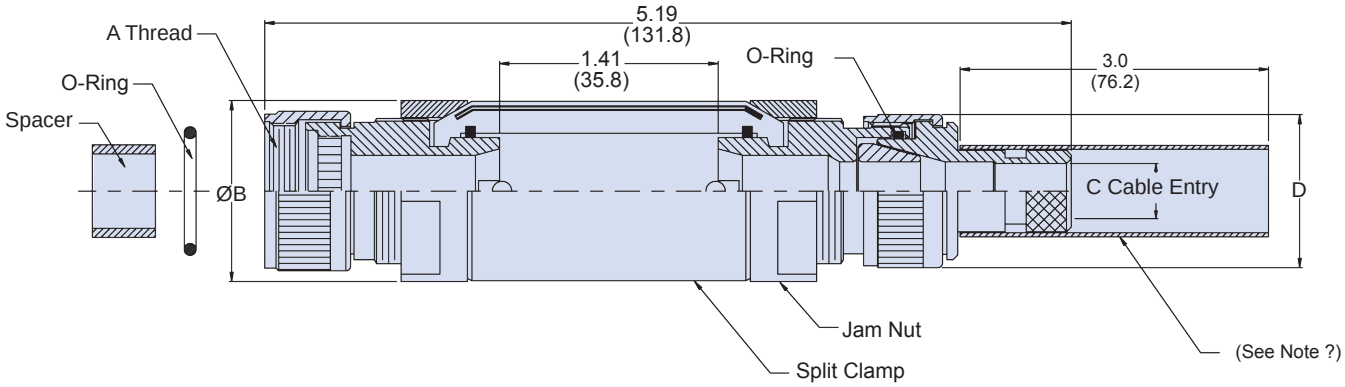

Material and Plating

Adapter, Jam Nut, Ferrule, Coupling Nut, Split Elbows & Spacer: see Table I
O-Rings: Fluorosilicone
Shrink Sleeving: Polyolefin
Spacer: see Table I

Notes

Glenair 600 Series Backshell assembly tools are recommended for assembly and installation; Assembly procedure see GAP014.
MIL-I-23053/4 Shrink Sleeving, O-Ring and Spacer to be packaged loose in a plastic bag.
Assemble O-Ring and Spacer onto Connector as shown.

© 2013 Glenair, Inc. CAGE Code 06324 Printed in U.S.A.

189-001
Fiber Optic Backshell With Split Clamp
MIL-PRF-28876 Environmental

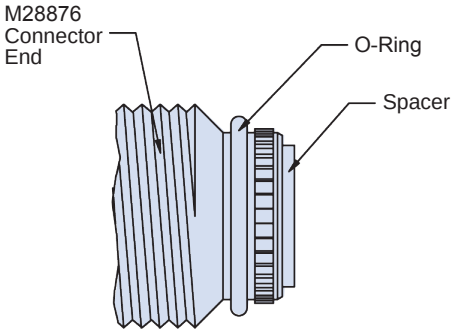

Table I: Material and Finish		
Code	**Material**	**Finish Description**
M	Aluminum Alloy	Electroless Nickel
NF		Cadmium/Olive Drab Over Electroless Nickel (500 hour salt spray)

Refer to Appendix for material/finish details

Table II				
Shell Size	**A Thread**	**B Max**	**C Max**	**D Max**
11	.750-20 UNEF	1.17 (29.7)	.340 (8.6)	1.00 (25.4)
13	.875-20 UNEF	1.17 (29.7)	.340 (8.6)	1.00 (25.4)
15	1.00 -20 UNEF	1.42 (36.0)	.460 (11.7)	1.13 (28.7)

© 2013 Glenair, Inc. CAGE Code 06324 Printed in U.S.A.

189-007
Fiber-Con Backshell
for MIL-PRF-28876 Connectors

MIL-PRF-28876 Fiber-Con backshell

How To Order

Product Series	Material/Finish (Table II)			SYM G = Gland Nut SYM T = Tubing Adapter Omit for Standard Shrink Boot Adapter	
189 -	007	NF	13	T	4
	Basic No.		Shell Size (Table I)		Length In 1/2 Inch Increments (Example: 4 = 2 Inches)

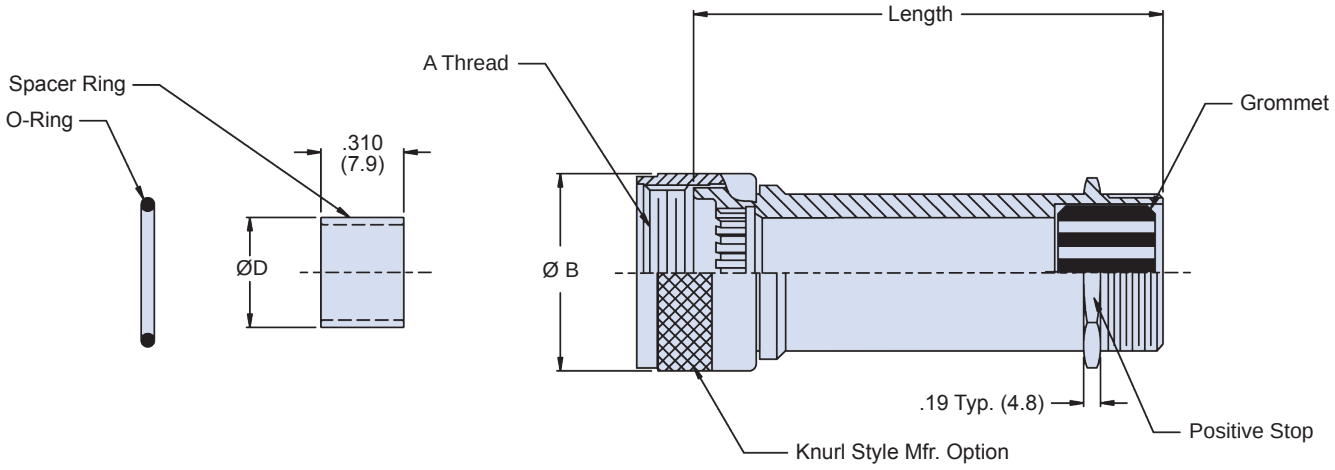

Material and Finish

Adapters, Coupling Nuts, Ferrule, Compression Nut, Spacer Ring: see table II
Grommet: Fluorosilicone
O-Ring: Fluorosilicone

Notes

Glenair 600 Series Backshell assembly tools are recommended for assembly and installation.
Spacer Ring and O-Ring are packaged loose and must be installed with Connector at time of assembly. The Spacer is utilized to retain the Terminus Insert.
Standard minimum order is 1.5 inch. Consult factory for shorter length.

© 2013 Glenair, Inc. CAGE Code 06324 Printed in U.S.A.

189-007
Fiber-Con Backshell
for MIL-PRF-28876 Connectors

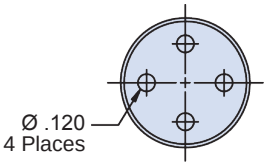

HOLE PATTERN
SHELL SIZE 13 SHOWN

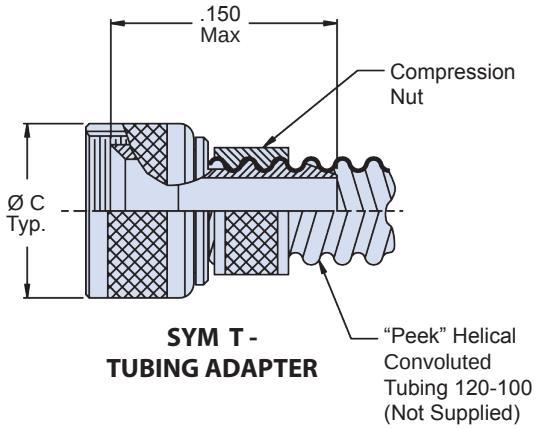

SYM T -
TUBING ADAPTER

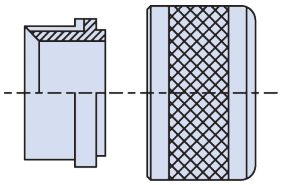

SYM G -
GLAND NUT

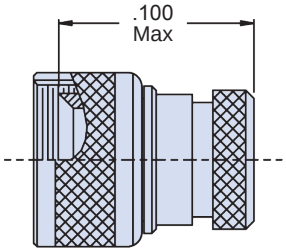

SHRINK BOOT
ADAPTER (STD)

Table I

Shell Size	Designator (Ref)	A Thread Class 2B	B Max	C Max	D Max	Conduit Size	No. Of Holes
11	A	3/4-20 UNEF	1.03 (26.2)	-	.41 (10.4)	12	2
13	B	7/8-20 UNEF	1.14 (29.0)	1.12 (28.4)	.53 (13.5)	16	4
15	C	1-20 UNEF	1.26 (32.0)	1.34 (34.0)	.71 (19.0)	24	8
23	F	17/16-18 UNEF	1.70 (43.2)	1.66 (42.2)	1.12 (28.4)	28	31

Table II: Material and Finish

Code		Finish Description
M	Aluminum Alloy	Electroless Nickel
NF		Cadmium/Olive Drab Over Electroless Nickel (500 hour salt spray)

Refer to Appendix for material/finish details

© 2013 Glenair, Inc. CAGE Code 06324 Printed in U.S.A.

189-009
Banding Backshell / Molding Adapter
For MIL-PRF-28876 Connectors

MIL-PRF-28876 banding backshell/molding adapter

How To Order

Product Series	Basic No.	Shell Size (Table I)	Length In 1/2 Inch Increments (Example: 04 = 2 Inches)
189	009	15	04

Angular Function (*H*, *J*, or *S*)	Material/Finish (Table III)	Entry Size (Table II)
S	NF	08

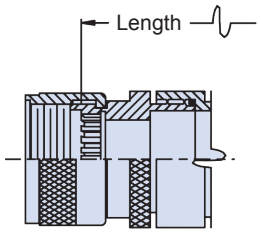

STYLE 2, SYM S

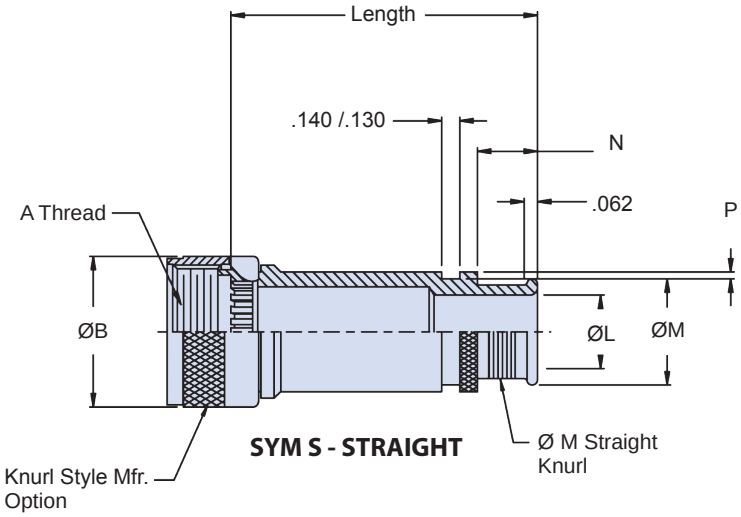

SYM S - STRAIGHT

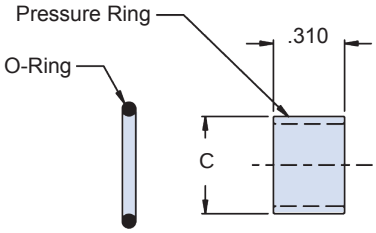

Material and Finish

Adapters, Elbows, Coupling Nut, Pressure Ring: see Table II
Clamp Components: Ryton R 4XT-Black, Ultem 1000-Natural
O-Ring: Fluorosilicone

Notes

Assembly to be identified with manufacturer's name and P/N, space permitting.
Standard minimum length for style 1: 1.5 inches, for Style 2: 2 inches.
Note: Length applies to SYM S, Straight only.
When cable diameter exceeds inside diameter of Connector Shell, Style 2 will be supplied.
Glenair 600 Series Backshell assembly tools are recommended for assembly and installation.
O-Ring and Pressure Ring to be packaged loose and must be installed with Connector at time of assembly.

© 2013 Glenair, Inc.

189-009
Banding Backshell / Molding Adapter
For MIL-PRF-28876 Connectors

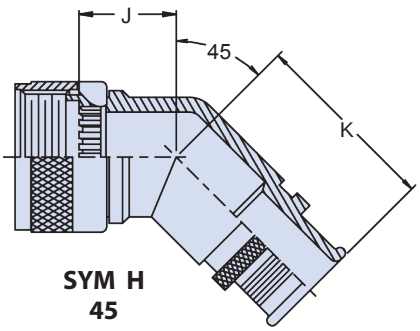

SYM H
45

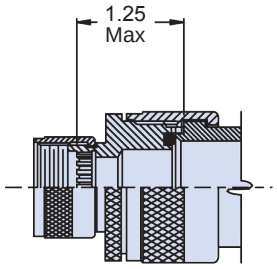

STYLE 2
45 & 90

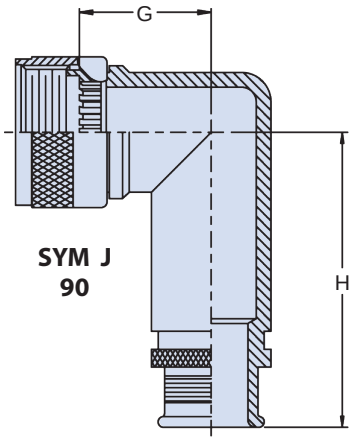

SYM J
90

Table I

Shell Size	Conn. Desig.	A Thread UNEF	ØB Max	ØC Max	G Max	H Max	J Max	K Max	Max Entry
11	A	.750-20	.960 (26.2)	.410 (10.4)	1.28 (32.5)	1.33 (33.8)	1.14 (29.0)	1.19 (30.2)	07
13	B	.875-20	1.09 (29.0)	.532 (13.5)	1.35 (34.3)	1.40 (35.6)	1.17 (29.7)	1.22 (30.1)	08
15	C	1.000-20	1.26 (32.0)	.710 (18.0)	1.43 (36.3)	1.47 (37.3)	1.20 (30.4)	1.25 (31.8)	10
23	F	1.437-18	1.70 (43.2)	1.12 (28.4)	1.64 (41.7)	1.68 (46.7)	1.29 (32.8)	1.33 (33.8)	13

Table II

Dash No.	P	L Dia.	M Dia.	N
04	.044	.205	.325	.525
05	.044	.235	.355	.525
06	.044	.255	.375	.525
07	.044	.205	.450	.525
08	.044	.330	.580	.600
09	.044	.450	.660	.600
10	.044	.670	.790	.600
11	.044	.840	.960	.600
12	.069	1.080	1.080	.600
13	.069	1.200	1.200	.600

Table III: Material and Finish

Code	Material	Finish Description
M	Aluminum Alloy	Electroless Nickel
NF		Cadmium/Olive Drab Over Electroless Nickel (500 hour salt spray)

Refer to Appendix for material/finish details

© 2013 Glenair, Inc.

GLENAIR, INC. • 1211 AIR WAY • GLENDALE, CA 91201-2497 • 818-247-6000 • FAX 818-500-9912
www.glenair.com
E-Mail: sales@glenair.com

189-014
Backshell for PEEK Convoluted Tubing
to be used with MIL-PRF-28876 Fiber Optic Connectors

MIL-PRF-28876 backshell

How To Order

Product Series		Basic No.	Material/Finish (Table II)	Shell Size (Table I)
189	-	014	NF	11

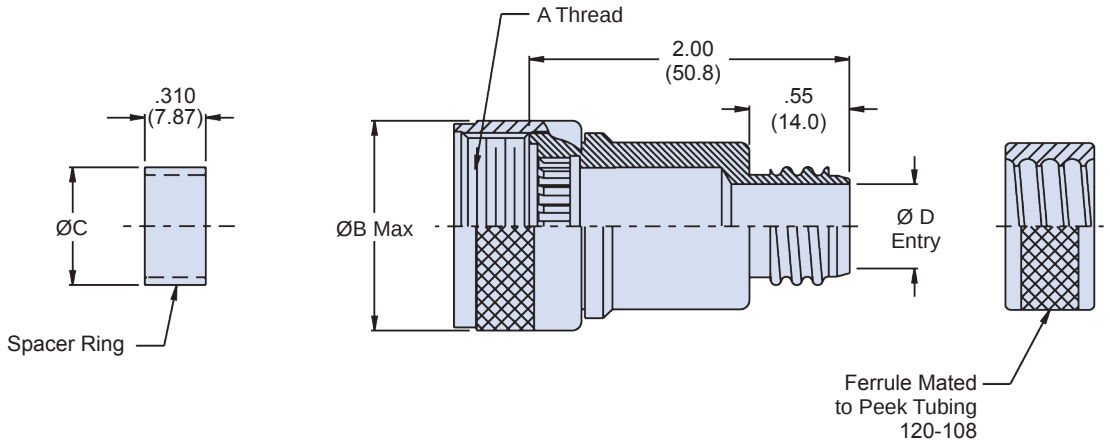

Material and Finish
Adapter, Coupling Nut, Ferrule, and Spacer Ring: See Table II

Notes
Spacer Ring is packaged loose and must be installed with Connector at time of assembly to retain Terminus Insert.
For 45° or 90° Backshell option, see Glenair drawing 189-021.

© 2013 Glenair, Inc. CAGE Code 06324 Printed in U.S.A.

189-014
Backshell for PEEK Convoluted Tubing
to be used with MIL-PRF-28876 Fiber Optic Connectors

Table I: Shell Size Dash Number							
Shell Size	Designator (Ref)	A Thread Class 2B	ØB Max	ØC Max	Ø D Entry	"Peek" Conduit Size	
						Frac. Size	Dash No.
11	A	3/4-20 UNEF	.960 (24.4)	.410 (10.4)	.390 (9.91)	1/2	16
13	B	7/8-20 UNEF	1.09 (27.7)	.532 (13.5)	.390 (9.91)	1/2	16
15	C	1-20 UNEF	1.26 (32.0)	.710 (18.0)	.390 (9.91)	1/2	16
23	F	1 7/16-18 UNEF	1.70 (43.2)	1.12 (28.4)	.890 (22.6)	1	32

Table II: Material and Finish		
Code	Material	Finish Description
M	Aluminum Alloy	Electroless Nickel
NF		Cadmium/Olive Drab over Electroless Nickel (500 Hour Salt Spray)
Z1	Stainless Steel	Passivate

Refer to Appendix for material/finish details

© 2013 Glenair, Inc.

M28876/10 and M28876/15
660-072 and 660-073
MIL-PRF-28876 Dust Covers

M28876 QPL

Plug and receptacle dust covers

Table I: Cover Type		
Connector	MIL-Spec Basic P/N	Glenair Commercial Basic P/N
Plug	M28876/10	660-072
Receptacle	M28876/15	660-073

M28876/10 • 660-072
Plug Cover

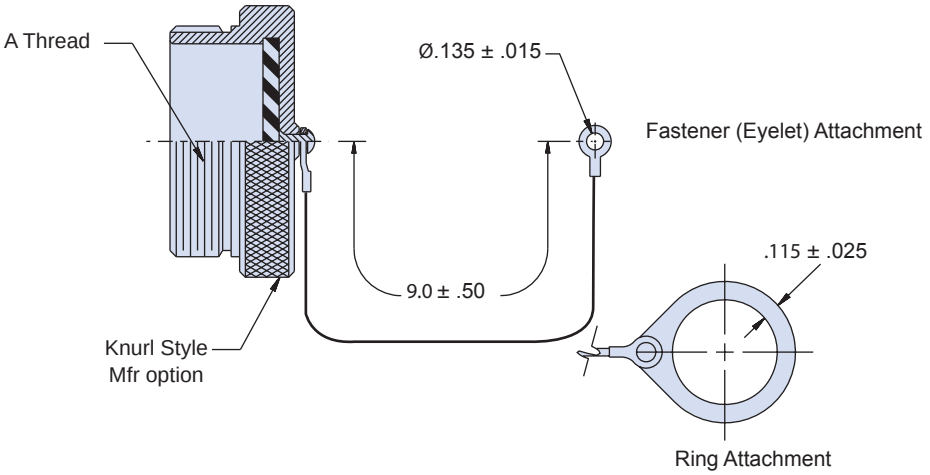

M28876/15 • 660-073
Receptacle Cover

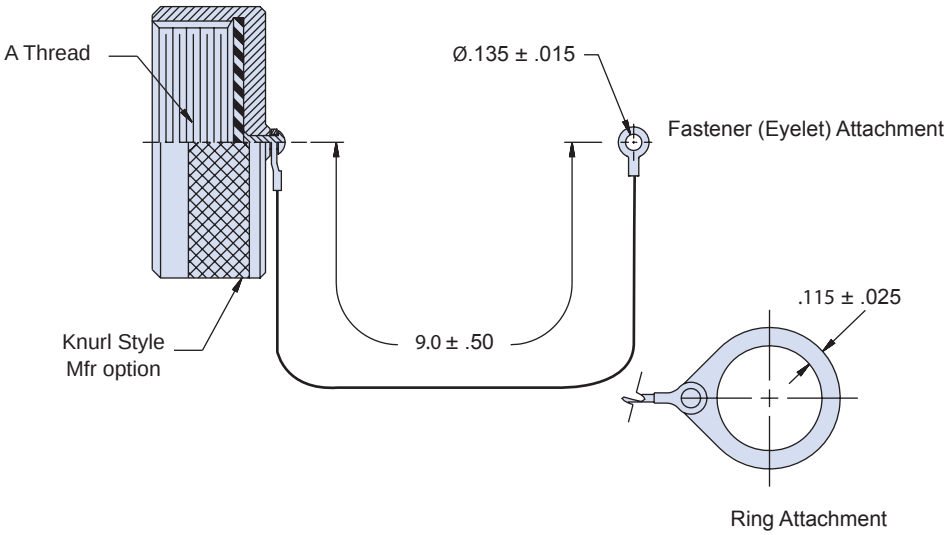

© 2013 Glenair, Inc. CAGE Code 06324 Printed in U.S.A.

M28876/10 and M28876/15
660-072 and 660-073
MIL-PRF-28876 Dust Covers

Glenair®

How to order: Military QPL

Cover Type
Plug or Receptacle
(Table I)

Lanyard/ Attachment Type
(Table IV)

M28876/10 - C C

Shell Size
(Table III)

Materials and Finish
Note: All M28876 Part Numbers are supplied standard with Cadmium Plate, Olive Drab (1000 Hrs. Salt Spray) over Aluminum Alloy

Table II: Material and Finish (Commercial)		
Code	Material	Finish Description
M	Aluminum Alloy	Electroless Nickel
NF		Cadmium, Olive Drab
MT		Nickel-PTFE, Grey
ZR		Zinc-Nickel, Black
Consult Factory for Additional Options		

Refer to Appendix for material/finish details

*MT plating available only with Glenair commercial equivalent part numbers

Table III: Shell Size	
Symbol	A Thread
A	.750-0.1P-0.2L-D.S.
B	.875-0.1P-0.2L-D.S.
C	1.062-0.1P-0.2L-D.S.
F	1.500-0.1P-0.2L-D.S.

C

How To Order: Glenair Commercial

Cover Type
(Plug or Receptacle)
(Table I)

Shell Size
(Table III)

Attachment Length
In inches (Consult factory for length options)

660-072 NF C H 9 - 01

Material/ Finish Code
(Table II)

Lanyard Type
(Table V)

Attachment Type
(Table VI)

Table IV: Lanyard/Attachment (MIL-Spec)	
Symbol	Description
A	Chain (Sash) with Fastener (Eyelet) Attachment
B	Chain (Sash) with Ring Attachment
C	Wire Rope with Fastener (Eyelet) Attachment
D	Wire Rope with Ring Attachment
E	Without Chain (Sash) or Wire Rope

Table VI: Attachment Type (Commercial)			
Shell Size	Attachment Type	Connector Type	Code
A	Ring	Plug	13
		Recp	15
B	Ring	Plug	15
		Recp	17
C	Ring	Plug	17
		Recp	20
F	Ring	Plug	23
		Recp	27
All	Fastener (Eyelet)	All	01

Table V: Lanyard Type (Commercial)	
Symbol	Type
H	Wire Rope, Coated
S	Chain (Sash), Passivated
N	No Lanyard
Consult Factory for Additional Options	

© 2013 Glenair, Inc.

SERIES 77

FULL NELSON

Heat Shrink Boots

Outstanding Environmental and Mechanical Protection

"Think he'll ever break that hold? Nope. He's got him in a Full Nelson!"

Nothing conjures up the image of an unbreakable hold like a Standing Full Nelson. Properly applied, this classic Greco-Roman wrestling move is simply unbeatable. We'd like to think the same holds true for our Series 77 *Full Nelson* Environmental Shrink Boots. Properly applied, Series 77 boots provide a dependable, leak-proof seal for interconnect cable assemblies. Optional adhesive coatings on the inside of the boot provide a watertight, high-strength bond to the cable jacket and the connector or adapter. And the Glenair shape-memory boot material formula works every time. So if you're worried about sealing effectiveness, if you want long-lasting environmental protection, if you want an ingress prevention solution that won't lose it's grip after years and years of service, get a Series 77 *Full Nelson*—the environmental shrink boot with the iron grip of a championship wrestler.

Glenair®

1211 Air Way • Glendale, CA 91201-2497 • Tel: 818-247-6000 • Fax: 818-500-9912 • E-Mail: sales@glenair.com

Glenair's CSGA Provide 360° EMI/EMP Grounding the First Time...and Every Time

Our line of **Cable Shield Grounding Assemblies** are available in male, female and split versions and provide completely reliable 360° grounding of shielded cables to above deck stuffing tubes and swage tubes.

Glenair's CSGA are designed to insure both reliable EMI/EMP shielding as well as strict environmental protection. Glenair's CSGA meet MIL-STD 1310 grounding requirements and NAVSEA 803-5001-27 sealing requirements. Glenair CSGA are available in 18 sizes to accomodate stuffing tube sizes A through V.

Supplied in kit form, each CSGA includes the complete grounding assembly as well as an adhesive-coated heat shrinkable sleeve and Permatex 133A antisieze compound. Products meet NAVSEA requirements.

Temperature Rating: -55° C to 90° C
Minimum Shrink Temperature: 121° C
CSGA Material: 6061-T6 Aluminum*
Finish: Electroless Nickel*

*Available in Passivated 316 Stainless Steel

© 2013 Glenair, Inc.

GLENAIR, INC. • 1211 AIR WAY • GLENDALE, CA 91201-2497 • 818-247-6000 • FAX 818-500-9912
www.glenair.com
E-Mail: sales@glenair.com

Cable Shield Grounding Assembly
Installation Instructions

Attention: Do Not Disassemble The Unit

1. Prior to pulling the cable through the stuffing tube, remove and discard the gland nut and replace with the grounding assembly, lightly threading the assembly onto the tube (the assembly must match the tube size, i.e., A, B, C, etc.). Slide the tubing over the grounding assembly.

2. Pull the cable (B) through the grounding assembly and tubing, using care to prevent damage to internal components.

3. Permanently install the cable in place and tighten all hangers.

4. Slide the tubing up the cable, away from the grounding assembly. Unscrew the grounding assembly and move it several inches up the cable. Separate the lower nut (D) from the upper nut (C).

5. Pack the stuffing tube, as required, using the original slip washer and packing gland. Apply anti-seize compound per MIL-T-22361 (FSN 8030-00-22-1102) to threads (A1) and tighten the lower nut (D) as required for packing.

6. Abrade the cable for approximately 6” above the lower nut (D).

7. Drop the 1st grounding ring (E), spacer (F), and the 2nd grounding ring (G) down on top of the lower nut (D). Mark the cable at top of the 2nd grounding ring (G), slide the components up the cable and remove the outer jacket from the mark to the top of the lower nut (D).

8. Apply a coating of anti-seize to the exposed threads (A2). Reassemble the components (E, F, & G) on the exposed shield.

9. Lower the upper nut (C) and hand-tighten firmly.

10. Slide the tubing down the cable and center it over the grounding assembly. Be sure the tubing overlaps the stuffing tube and onto the cable beyond the boot. Apply heat from the center of the tubing towards the ends to ensure even shrinkage. The sealant will flow from the ends of the tubing when recovery is complete.

NOTE: *This method of cable grounding applies to new installation and to retrofit cables that can be removed and routed through the grounding assembly.*

© 2013 Glenair, Inc. CAGE Code 06324 Printed in U.S.A.

GLENAIR, INC. • 1211 AIR WAY • GLENDALE, CA 91201-2497 • 818-247-6000 • FAX 818-500-9912
www.glenair.com E-Mail: sales@glenair.com

Cable Shield Grounding Assembly
Installation Instructions

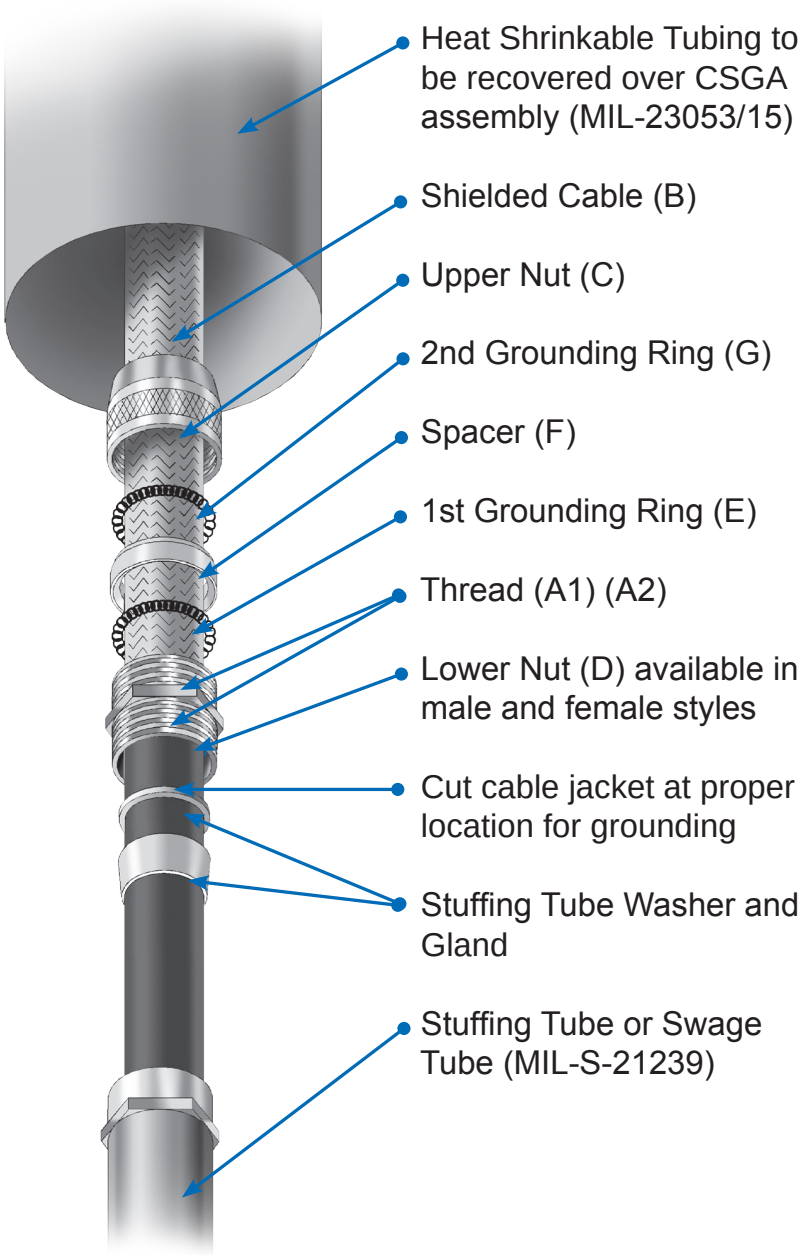

© 2013 Glenair, Inc. CAGE Code 06324 Printed in U.S.A.

GA/CSGA
Male
Cable Shield Grounding Assembly

Basic Number		Stuffing Tube Size *(Table I)*
GA/CSGA	-	A

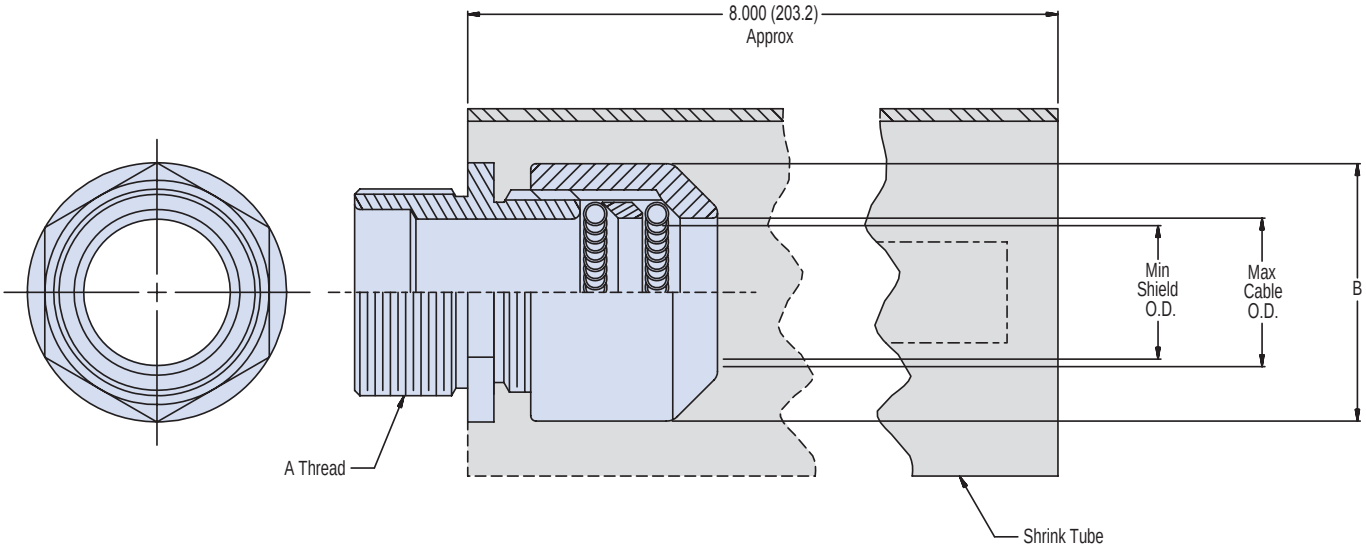

APPLICATION NOTES

1. Assembly identified with manufacurer's code identification number (Glenair, part number and classification code 490).
2. Glenair series 600 backshell assembly tools are recommended for assembly and installation.
3. Material / Finish:
   Adapters - Al alloy/cad/O.D. over electroless nickel (500 hr salt spray).
   Ferrule, grounding spring - CRES/passivate.
   Tubing - Heat shrinkable, flame retardant, with adhesive.
4. Metric dimensions (mm) are indicated in parentheses.

© 2013 Glenair, Inc. CAGE Code 06324 Printed in U.S.A.

TABLE I: Stuffing Tube Size and Adapter Dimensions

Glenair Part No.	A Thread	Max Cable O.D.	Min Shield O.D.	B Max	Shrink Tube Number
GA/CSGA-A (sm)	7/8 -12 UN	.250 (6.4)	.125 (3.2)	1.120 (28.4)	HRSR 125
GA/CSGA-A	7/8 -12 UN	.406 (10.3)	.200 (5.1)	1.120 (28.4)	
GA/CSGA-B	1 -12 UN	.515 (13.1)	.260 (6.6)	1.120 (28.4)	
GA/CSGA-C	1 1/8 -12 UN	.640 (16.3)	.400 (10.2)	1.320 (33.5)	HRSR 175
GA/CSGA-D	1 1/4 -12 UN	.750 (19.1)	.400 (10.2)	1.630 (41.4)	
GA/CSGA-E	1 1/4 -12 UN	.812 (20.6)	.430 (10.9)	1.630 (41.4)	
GA/CSGA-F	1 5/16 -12 UN	.843 (21.4)	.470 (11.9)	1.750 (44.5)	HRSR 200
GA/CSGA-G	1 1/2 -12 UN	.953 (24.2)	.580 (14.7)	1.880 (47.8)	
GA/CSGA-J	1 5/8 -12 UN	1.062 (27.0)	.690 (17.5)	1.880 (47.8)	
GA/CSGA-K	1 3/4 -12 UN	1.172 (29.8)	.800 (20.3)	2.060 (5.2)	HRSR 250
GA/CSGA-L	1 13/16 -12 UN	1.265 (32.1)	.890 (22.6)	2.180 (55.4)	
GA/CSGA-M	2 -12 UN	1.406 (35.7)	1.010 (25.7)	2.320 (58.9)	
GA/CSGA-N	2 1/16 -12 UN	1.515 (38.5)	1.130 (28.7)	2.380 (60.5)	
GA/CSGA-P	2 3/16 -12 UN	1.625 (41.3)	1.200 (30.5)	2.440 (62.0)	
GA/CSGA-R	2 5/16 -12 UN	1.750 (44.5)	1.250 (31.8)	2.750 (69.9)	HRSR 300
GA/CSGA-S	2 11/16 -12 UN	1.875 (47.6)	1.380 (35.1)	2.880 (73.2)	
GA/CSGA-T	2 7/8 -12 UN	2.062 (52.4)	1.560 (39.6)	3.130 (79.5)	HRSR 400
GA/CSGA-V	3 -12 UN	2.187 (55.5)	1.690 (42.9)	3.250 (82.6)	

© 2013 Glenair, Inc. CAGE Code 06324 Printed in U.S.A.

GA/CSGA-**/NPT
Female Pipe Thread
Cable Shield Grounding Assembly

Basic Number		Stuffing Tube Size *(Table I)*
GA/CSGA	-	**/NPT

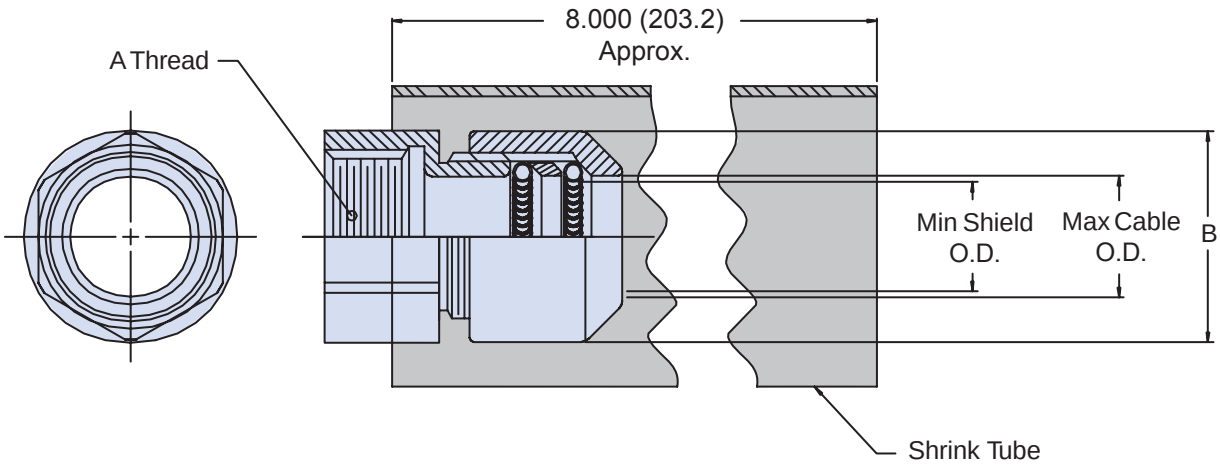

APPLICATION NOTES

1. Assembly identified with manufacurer's code identification number (Glenair, part number and classification code 490).
2. Glenair series 600 backshell assembly tools are recommended for assembly and installation.
3. Material / Finish:
   Adapters - Al alloy/cad/O.D. over electroless nickel (500 hr salt spray).
   Ferrule, grounding spring - CRES/passivate.
   Tubing - Heat shrinkable, flame retardant, with adhesive.
4. Metric dimensions (mm) are indicated in parentheses.

*Available in Passivated 316 Stainless Steel, add 49A to end of part number.

© 2013 Glenair, Inc. CAGE Code 06324 Printed in U.S.A.

GA/CSGA-**/NPT
Female Pipe Thread
Cable Shield Grounding Assembly

TABLE I					
Part Number	A Thread	Max Cable O.D.	Min Shield O.D.	B Max	Shrink Tube Part No.
GA/CSGA -1A/NPT	⅜ - 18 NPT	0.406 (10.3)	0.200 (5.1)	1.12 (28.4)	HRSR 125
GA/CSGA-2B/NPT	½ - 14 NPT	0.515 (13.1)	0.260 (6.6)	1.12 (28.4)	
GA/CSGA-3C/NPT	¾ - 14 NPT	0.640 (16.3)	0.400 (10.2)	1.32 (33.5)	HRSR 175
GA/CSGA-3D/NPT	¾ - 14 NPT	0.750 (19.1)	0.400 (10.2)	1.63 (41.4)	
GA/CSGA-4E/NPT	1 - 11 ½ NPT	0.812 (20.6)	0.430 (10.9)	1.63 (41.4)	
GA/CSGA-4F/NPT	1 - 11 ½ NPT	0.843 (21.4)	0.470 (11.9)	1.75 (44.5)	HRSR 200
GA/CSGA-4G/NPT	1 - 11 ½ NPT	0.953 (24.2)	0.580 (14.7)	1.88 (47.8)	
GA/CSGA-5J/NPT	1 ¼ - 11 ½ NPT	1.062 (27.0)	0.690 (17.5)	1.88 (47.8)	
GA/CSGA-5K/NPT	1 ¼ - 11 ½ NPT	1.172 (29.8)	0.800 (20.3)	2.06 (52.3)	HRSR 250
GA/CSGA-5L/NPT	1 ¼ - 11 ½ NPT	1.265 (32.1)	0.890 (22.6)	2.18 (55.4)	
GA/CSGA-6M/NPT	1 ½ - 11 ½ NPT	1.406 (35.7)	1.010 (25.7)	2.32 (58.9)	
GA/CSGA-6N/NPT	1 ½ - 11 ½ NPT	1.515 (38.5)	1.130 (28.7)	2.38 (60.5)	
GA/CSGA-7P/NPT	2 - 11 ½ NPT	1.625 (41.3)	1.130 (28.7)	2.44 (62.0)	
GA/CSGA-7R/NPT	2 - 11 ½ NPT	1.750 (44.5)	1.250 (31.8)	2.75 (69.9)	HRSR 300
GA/CSGA-7S/NPT	2 - 11 ½ NPT	1.875 (47.6)	1.380 (35.1)	2.88 (73.2)	
GA/CSGA-8T/NPT	2 ½ - 8 NPT	2.062 (52.4)	1.560 (39.6)	3.13 (79.5)	HRSR 400
GA/CSGA-8V/NPT	2 ½ - 8 NPT	2.187 (55.5)	1.690 (42.9)	3.25 (82.6)	

© 2013 Glenair, Inc.

GLENAIR, INC. • 1211 AIR WAY • GLENDALE, CA 91201-2497 • 818-247-6000 • FAX 818-500-9912
www.glenair.com E-Mail: sales@glenair.com

GA/CSGA-49B
Male
Stainless Steel Cable Shield Grounding Assembly

Basic Number		Stuffing Tube Size (Table I)		Mod Code (Stainless Steel)
GA/CSGA	-	A	-	49B

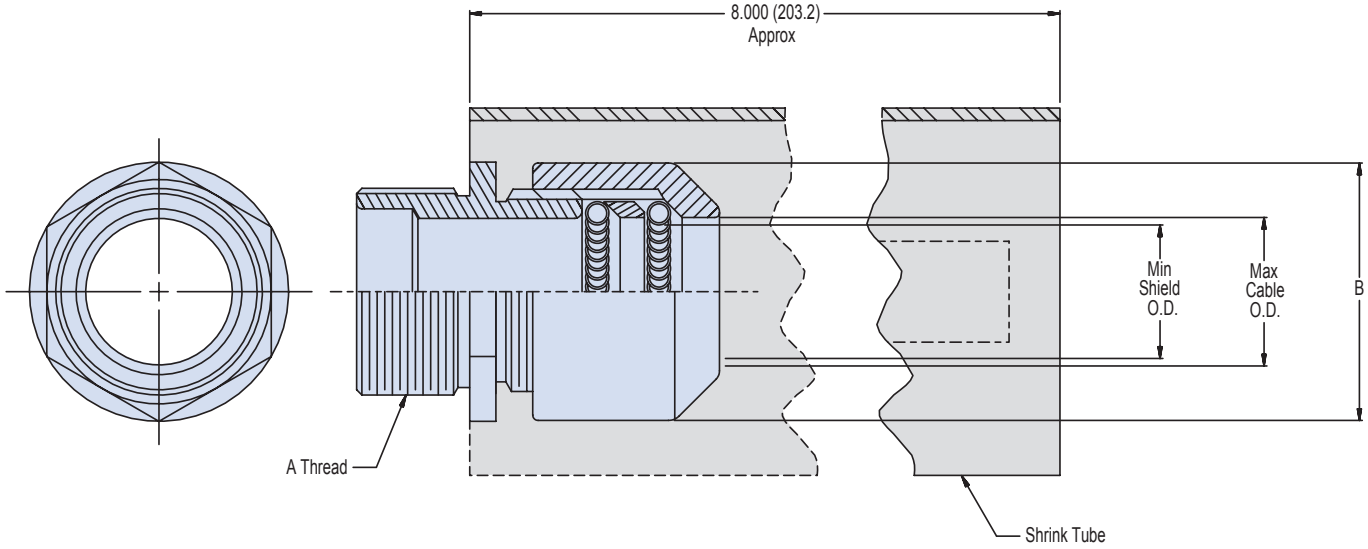

APPLICATION NOTES

1. Assembly identified with manufacurer's code identification number (Glenair, part number and classification code 490).
2. Glenair series 600 backshell assembly tools are recommended for assembly and installation.
3. Material / Finish:
   Adapters - CRES/passivate.
   Ferrule, grounding spring - CRES/passivate.
   Tubing - Heat shrinkable, flame retardant, with adhesive.
4. Metric dimensions (mm) are indicated in parentheses.

© 2013 Glenair, Inc. CAGE Code 06324 Printed in U.S.A.

GA/CSGA-49B
Male
Stainless Steel Cable Shield Grounding Assembly

Glenair®

TABLE I: Stuffing Tube Size and Adapter Dimensions

Glenair Part No.	A Thread	Max Cable O.D.	Min Shield O.D.	B Max	Shrink Tube Number
GA/CSGA-A (SM)-49B	7/8 -12 UN	.250 (6.4)	.125 (3.2)	1.120 (28.4)	HRSR 125
GA/CSGA-A-49B	7/8 -12 UN	.406 (10.3)	.200 (5.1)	1.120 (28.4)	
GA/CSGA-B-49B	1 -12 UN	.515 (13.1)	.260 (6.6)	1.120 (28.4)	
GA/CSGA-C-49B	1 1/8 -12 UN	.640 (16.3)	.400 (10.2)	1.320 (33.5)	HRSR 175
GA/CSGA-D-49B	1 1/4 -12 UN	.750 (19.1)	.400 (10.2)	1.630 (41.4)	
GA/CSGA-E-49B	1 1/4 -12 UN	.812 (20.6)	.430 (10.9)	1.630 (41.4)	
GA/CSGA-F-49B	1 5/16 -12 UN	.843 (21.4)	.470 (11.9)	1.750 (44.5)	HRSR 200
GA/CSGA-G-49B	1 1/2 -12 UN	.953 (24.2)	.580 (14.7)	1.880 (47.8)	
GA/CSGA-J-49B	1 5/8 -12 UN	1.062 (27.0)	.690 (17.5)	1.880 (47.8)	
GA/CSGA-K-49B	1 3/4 -12 UN	1.172 (29.8)	.800 (20.3)	2.060 (5.2)	HRSR 250
GA/CSGA-L-49B	1 13/16 -12 UN	1.265 (32.1)	.890 (22.6)	2.180 (55.4)	
GA/CSGA-M-49B	2 -12 UN	1.406 (35.7)	1.010 (25.7)	2.320 (58.9)	
GA/CSGA-N-49B	2 1/16 -12 UN	1.515 (38.5)	1.130 (28.7)	2.380 (60.5)	
GA/CSGA-P-49B	2 3/16 -12 UN	1.625 (41.3)	1.200 (30.5)	2.440 (62.0)	
GA/CSGA-R-49B	2 5/16 -12 UN	1.750 (44.5)	1.250 (31.8)	2.750 (69.9)	HRSR 300
GA/CSGA-S-49B	2 11/16 -12 UN	1.875 (47.6)	1.380 (35.1)	2.880 (73.2)	
GA/CSGA-T-49B	2 7/8 -12 UN	2.062 (52.4)	1.560 (39.6)	3.130 (79.5)	HRSR 400
GA/CSGA-V-49B	3 -12 UN	2.187 (55.5)	1.690 (42.9)	3.250 (82.6)	

© 2013 Glenair, Inc. CAGE Code 06324 Rev. 10-15-14 Printed in U.S.A.

GA/CSGA-**
Female
Cable Shield Grounding Assembly

Basic Number		Stuffing Tube Size *(Table I)*
GA/CSGA	-	1A

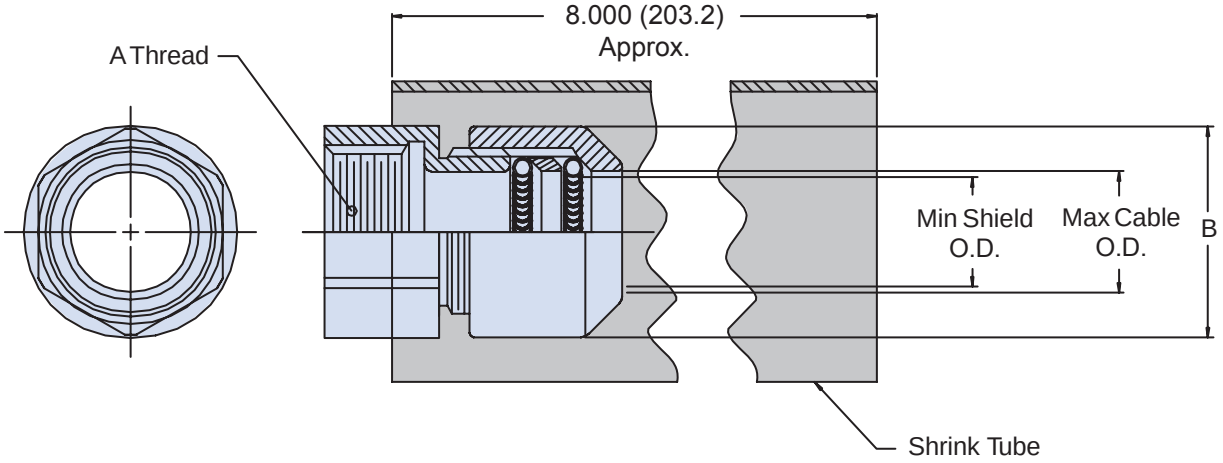

APPLICATION NOTES

1. Assembly identified with manufacurer's code identification number (Glenair, part number and classification code 490).
2. Glenair series 600 backshell assembly tools are recommended for assembly and installation.
3. Material / Finish:
   Adapters - Al alloy/cad/O.D. over electroless nickel (500 hr salt spray).
   Ferrule, grounding spring - CRES/passivate.
   Tubing - Heat shrinkable, flame retardant, with adhesive.
4. Metric dimensions (mm) are indicated in parentheses.

© 2013 Glenair, Inc. CAGE Code 06324 Printed in U.S.A.

GA/CSGA-**
Female
Cable Shield Grounding Assembly

TABLE I: Stuffing Tube Size and Adapter Dimensions

Glenair Part No.	A Thread	Max Cable O.D.	Min Shield O.D.	B Max	Shrink Tube Number
GA/CSGA-1A	7/8 -12 UN	.406 (10.3)	.200 (5.1)	1.120 (28.4)	HRSR 125
GA/CSGA-2A	1 -12 UN	.406 (10.3)	.200 (5.1)	1.120 (28.4)	
GA/CSGA-2B	1 -12 UN	.515 (13.1)	.260 (6.6)	1.120 (28.4)	
GA/CSGA-3A	1 1/8 -12 UN	.515 (13.1)	.260 (6.6)	1.120 (28.4)	
GA/CSGA-4A	1 1/4 -12 UN	.640 (16.3)	.400 (10.2)	1.320 (33.5)	HRSR 175
GA/CSGA-4B	1 1/4 -12 UN	.750 (19.1)	.400 (10.2)	1.630 (41.4)	
GA/CSGA-5A	2 -12 UN	.843 (21.4)	.430 (10.9)	1.750 (44.5)	HRSR 200
GA/CSGA-5B	2 -12 UN	.953 (24.2)	.580 (14.7)	1.880 (47.8)	
GA/CSGA-5C	2 -12 UN	1.062 (27.0)	.690 (17.5)	1.880 (47.8)	
GA/CSGA-5D	2 -12 UN	1.172 (29.8)	.800 (20.3)	2.060 (5.2)	HRSR 250
GA/CSGA-6A	2 1/2 -12 UN	1.172 (29.8)	.800 (20.3)	2.060 (5.2)	
GA/CSGA-6B	2 1/2 -12 UN	1.265 (32.1)	.890 (22.6)	2.180 (55.4)	
GA/CSGA-6C	2 1/2 -12 UN	1.406 (35.7)	1.010 (25.7)	2.320 (58.9)	
GA/CSGA-7A	2 3/4 -12 UN	1.515 (38.5)	1.130 (28.7)	2.380 (60.5)	
GA/CSGA-7B	2 1/4 -12 UN	1.625 (41.3)	1.130 (28.7)	2.440 (62.0)	
GA/CSGA-8A	3 1/4 -12 UN	1.750 (44.5)	1.250 (31.8)	2.750 (69.9)	HRSR 300
GA/CSGA-8B	3 1/4 -12 UN	1.875 (47.6)	1.380 (35.1)	2.880 (73.2)	
GA/CSGA-8C	3 1/4 -12 UN	2.062 (52.4)	1.560 (39.6)	3.130 (79.5)	HRSR 400
GA/CSGA-9A	4 -12 UN	2.185 (55.5)	1.690 (42.9)	3.250 (82.6)	

© 2013 Glenair, Inc. CAGE Code 06324 Printed in U.S.A.

GA/CSGA-**-49B
Female
Stainless Steel Cable Shield Grounding Assembly

Basic Number		Stuffing Tube Size (Table I)		Mod Code (Stainless Steel)
GA/CSGA	-	**	-	49B

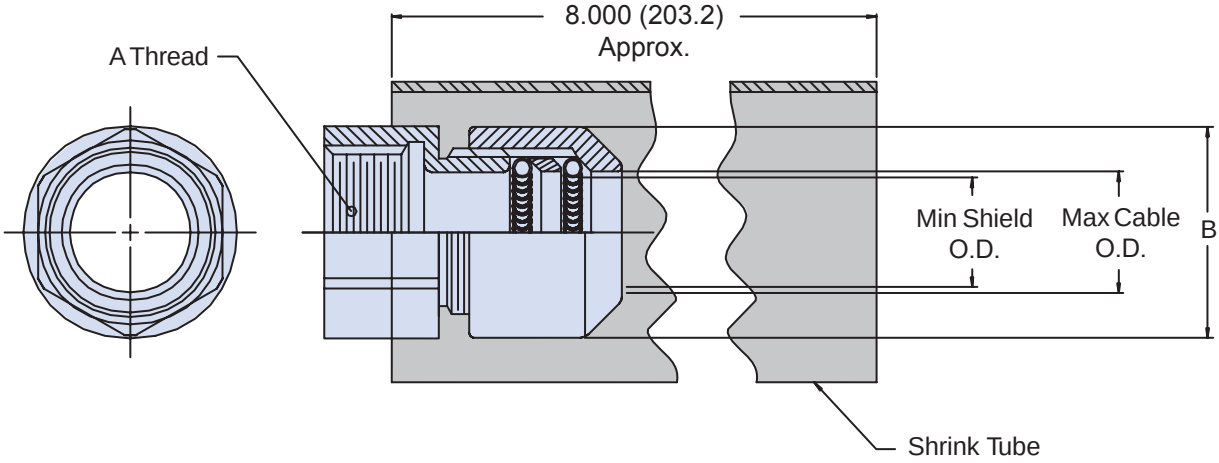

APPLICATION NOTES

1. Assembly identified with manufacurer's code identification number (Glenair, part number and classification code 490).
2. Glenair series 600 backshell assembly tools are recommended for assembly and installation.
3. Material / Finish:
   Adapters - CRES/passivate.
   Ferrule, grounding spring - CRES/passivate.
   Tubing - Heat shrinkable, flame retardant, with adhesive.
4. Metric dimensions (mm) are indicated in parentheses.

© 2013 Glenair, Inc. CAGE Code 06324 Printed in U.S.A.

GA/CSGA-**-49B
Female
Stainless Steel Cable Shield Grounding Assembly

Glenair®

TABLE I: Stuffing Tube Size and Adapter Dimensions

Glenair Part No.	A Thread	Max Cable O.D.	Min Shield O.D.	B Max	Shrink Tube Number
GA/CSGA-1A-49B	7/8 -12 UN	.406 (10.3)	.200 (5.1)	1.120 (28.4)	HRSR 125
GA/CSGA-2A-49B	1 -12 UN	.406 (10.3)	.200 (5.1)	1.120 (28.4)	
GA/CSGA-2B-49B	1 -12 UN	.515 (13.1)	.260 (6.6)	1.120 (28.4)	
GA/CSGA-3A-49B	1 1/8 -12 UN	.515 (13.1)	.260 (6.6)	1.120 (28.4)	
GA/CSGA-4A-49B	1 1/4 -12 UN	.640 (16.3)	.400 (10.2)	1.320 (33.5)	HRSR 175
GA/CSGA-4B-49B	1 1/4 -12 UN	.750 (19.1)	.400 (10.2)	1.630 (41.4)	
GA/CSGA-5A-49B	2 -12 UN	.843 (21.4)	.430 (10.9)	1.750 (44.5)	HRSR 200
GA/CSGA-5B-49B	2 -12 UN	.953 (24.2)	.580 (14.7)	1.880 (47.8)	
GA/CSGA-5C-49B	2 -12 UN	1.062 (27.0)	.690 (17.5)	1.880 (47.8)	
GA/CSGA-5D-49B	2 -12 UN	1.172 (29.8)	.800 (20.3)	2.060 (5.2)	HRSR 250
GA/CSGA-6A-49B	2 1/2 -12 UN	1.172 (29.8)	.800 (20.3)	2.060 (5.2)	
GA/CSGA-6B-49B	2 1/2 -12 UN	1.265 (32.1)	.890 (22.6)	2.180 (55.4)	
GA/CSGA-6C-49B	2 1/2 -12 UN	1.406 (35.7)	1.010 (25.7)	2.320 (58.9)	
GA/CSGA-7A-49B	2 3/4 -12 UN	1.515 (38.5)	1.130 (28.7)	2.380 (60.5)	
GA/CSGA-7B-49B	2 1/4 -12 UN	1.625 (41.3)	1.130 (28.7)	2.440 (62.0)	
GA/CSGA-8A-49B	3 1/4 -12 UN	1.750 (44.5)	1.250 (31.8)	2.750 (69.9)	HRSR 300
GA/CSGA-8B-49B	3 1/4 -12 UN	1.875 (47.6)	1.380 (35.1)	2.880 (73.2)	
GA/CSGA-8C-49B	3 1/4 -12 UN	2.062 (52.4)	1.560 (39.6)	3.130 (79.5)	HRSR 400
GA/CSGA-9A-49B	4 -12 UN	2.185 (55.5)	1.690 (42.9)	3.250 (82.6)	

© 2013 Glenair, Inc. CAGE Code 06324 Printed in U.S.A.

GA/CSGA-*/NPT
Male Pipe Thread
Cable Shield Grounding Assembly

Basic Number		National Pipe Thread Fitting Size *(Table I)*
GA/CSGA	-	A/NPT

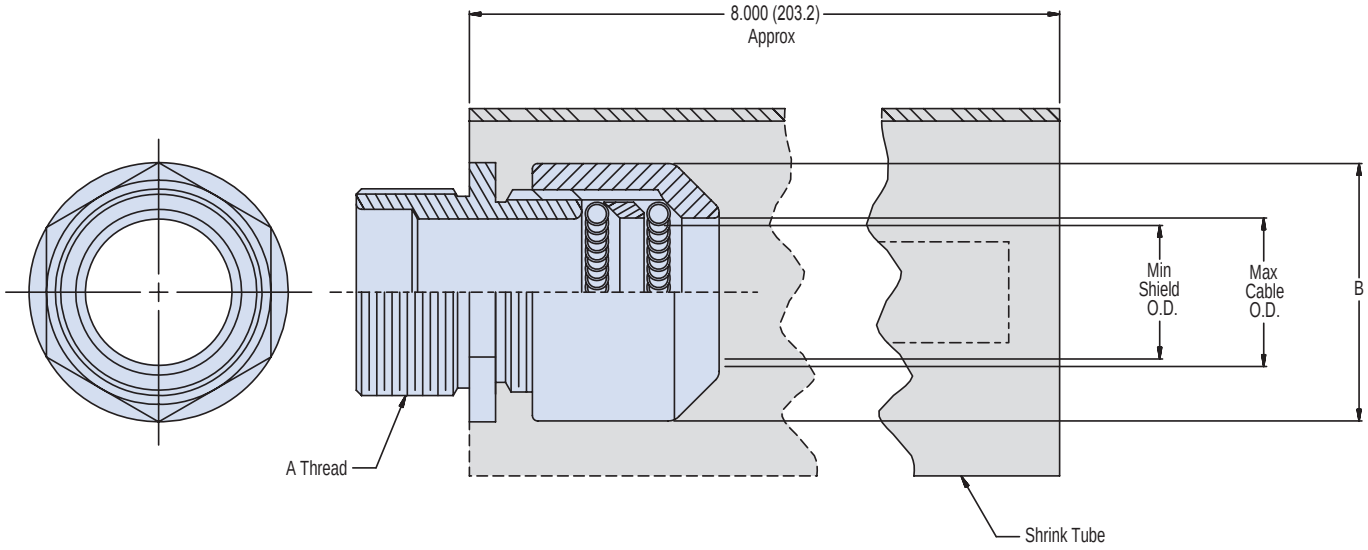

APPLICATION NOTES

1. Assembly identified with manufacurer's code identification number (Glenair, part number and classification code 490).
2. Glenair series 600 backshell assembly tools are recommended for assembly and installation.
3. Material / Finish:
   Adapters - Al alloy/cad/O.D. over electroless nickel (500 hr salt spray).
   Ferrule, grounding spring - CRES/passivate.
   Tubing - Heat shrinkable, flame retardant, with adhesive.
4. Metric dimensions (mm) are indicated in parentheses.

© 2013 Glenair, Inc. CAGE Code 06324 Printed in U.S.A.

GA/CSGA-*/NPT
Male Pipe Thread
Cable Shield Grounding Assembly

TABLE I: Stuffing Tube Size and Adapter Dimensions

Glenair Part No.	A Thread	Max Cable O.D.	Min Shield O.D.	B Max	Shrink Tube Number
GA/CSGA-A/NPT	3/8-18 NPT	.406 (10.3)	.200 (5.1)	1.120 (28.4)	HRSR 125
GA/CSGA-B/NPT	1/2-14 NPT	.515 (13.1)	.260 (6.6)	1.120 (28.4)	
GA/CSGA-C/NPT	3/4-14NPT	.640 (16.3)	.400 (10.2)	1.320 (33.5)	HRSR 175
GA/CSGA-D/NPT	3/4-14 NPT	.750 (19.1)	.400 (10.2)	1.630 (41.4)	
GA/CSGA-E/NPT	1-11 1/2 NPT	.812 (20.6)	.430 (10.9)	1.630 (41.4)	
GA/CSGA-F/NPT	1-11 1/2 NPT	.843 (21.4)	.470 (11.9)	1.750 (44.5)	HRSR 200
GA/CSGA-G/NPT	1-11 1/2 NPT	.953 (24.2)	.580 (14.7)	1.880 (47.8)	
GA/CSGA-J/NPT	1/4-11 1/2 NPT	1.062 (27.0)	.690 (17.5)	1.880 (47.8)	
GA/CSGA-K/NPT	1/4-11 1/2 NPT	1.172 (29.8)	.800 (20.3)	2.060 (5.2)	HRSR 250
GA/CSGA-L/NPT	1/4-11 1/2 NPT	1.265 (32.1)	.890 (22.6)	2.180 (55.4)	
GA/CSGA-M/NPT	1/2-11 1/2 NPT	1.406 (35.7)	1.010 (25.7)	2.320 (58.9)	
GA/CSGA-N/NPT	1/2-11 1/2 NPT	1.515 (38.5)	1.130 (28.7)	2.380 (60.5)	
GA/CSGA-P/NPT	2-11 NPT	1.625 (41.3)	1.200 (30.5)	2.440 (62.0)	
GA/CSGA-R/NPT	2-11 NPT	1.750 (44.5)	1.250 (31.8)	2.750 (69.9)	HRSR 300
GA/CSGA-S/NPT	2-11 NPT	1.875 (47.6)	1.380 (35.1)	2.880 (73.2)	
GA/CSGA-T/NPT	2 1/2-8 NPT	2.062 (52.4)	1.560 (39.6)	3.130 (79.5)	HRSR 400
GA/CSGA-V/NPT	2 1/2-8 NPT	2.187 (55.5)	1.690 (42.9)	3.250 (82.6)	

© 2013 Glenair, Inc. CAGE Code 06324 Printed in U.S.A.

GA/CSGA-*/NPT-49B
Male Pipe Thread
Stainless Steel Cable Shield Grounding Assembly

Basic Number		National Pipe Thread Fitting Size *(Table I)*		Mod Code *(Stainless Steel)*
GA/CSGA	-	A/NPT	-	49B

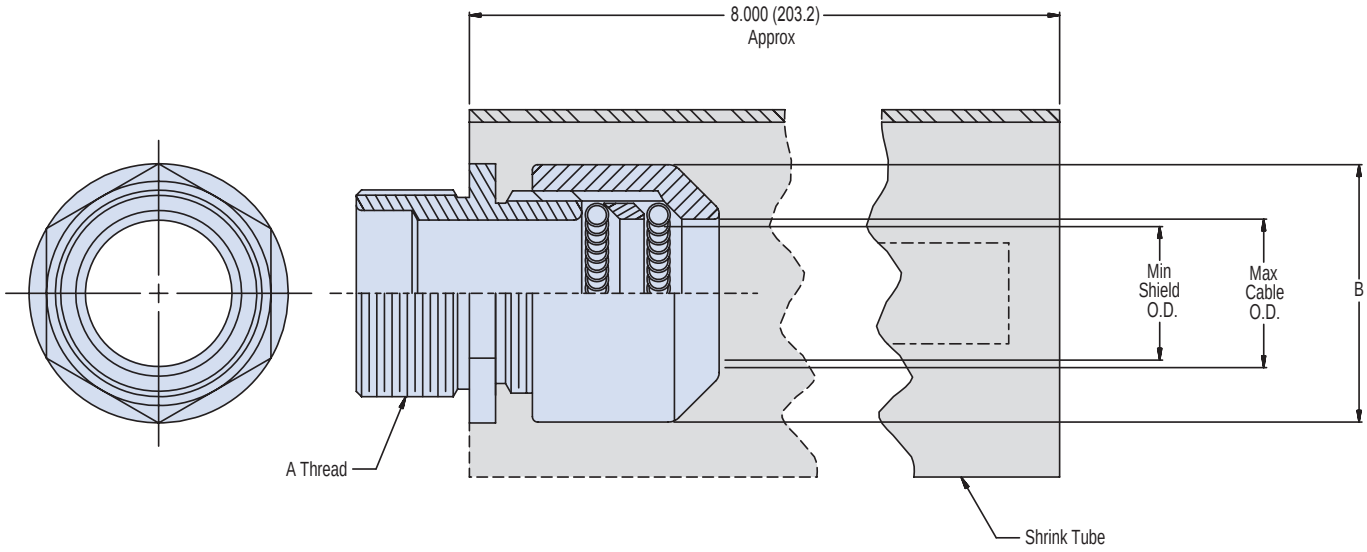

APPLICATION NOTES

1. Assembly identified with manufacurer's code identification number (Glenair, part number and classification code 490).
2. Glenair series 600 backshell assembly tools are recommended for assembly and installation.
3. Material / Finish:
   Adapters - CRES/passivate.
   Ferrule, grounding spring - CRES/passivate.
   Tubing - Heat shrinkable, flame retardant, with adhesive.
4. Metric dimensions (mm) are indicated in parentheses.

© 2013 Glenair, Inc. CAGE Code 06324 Printed in U.S.A.

GA/CSGA-*/NPT-49B
Male Pipe Thread
Stainless Steel Cable Shield Grounding Assembly

TABLE I: Stuffing Tube Size and Adapter Dimensions

Glenair Part No.	A Thread	Max Cable O.D.	Min Shield O.D.	B Max	Shrink Tube Number
GA/CSGA-A/NPT-49B	3/8-18 NPT	.406 (10.3)	.200 (5.1)	1.120 (28.4)	HRSR 125
GA/CSGA-B/NPT-49B	1/2-14 NPT	.515 (13.1)	.260 (6.6)	1.120 (28.4)	
GA/CSGA-C/NPT-49B	3/4-14NPT	.640 (16.3)	.400 (10.2)	1.320 (33.5)	HRSR 175
GA/CSGA-D/NPT-49B	3/4-14 NPT	.750 (19.1)	.400 (10.2)	1.630 (41.4)	
GA/CSGA-E/NPT-49B	1-11 1/2 NPT	.812 (20.6)	.430 (10.9)	1.630 (41.4)	
GA/CSGA-F/NPT-49B	1-11 1/2 NPT	.843 (21.4)	.470 (11.9)	1.750 (44.5)	HRSR 200
GA/CSGA-G/NPT-49B	1-11 1/2 NPT	.953 (24.2)	.580 (14.7)	1.880 (47.8)	
GA/CSGA-J/NPT-49B	1 1/4-11 1/2 NPT	1.062 (27.0)	.690 (17.5)	1.880 (47.8)	
GA/CSGA-K/NPT-49B	1 1/4-11 1/2 NPT	1.172 (29.8)	.800 (20.3)	2.060 (5.2)	HRSR 250
GA/CSGA-L/NPT-49B	1 1/4-11 1/2 NPT	1.265 (32.1)	.890 (22.6)	2.180 (55.4)	
GA/CSGA-M/NPT-49B	1 1/2-11 1/2 NPT	1.406 (35.7)	1.010 (25.7)	2.320 (58.9)	
GA/CSGA-N/NPT-49B	1 1/2-11 1/2 NPT	1.515 (38.5)	1.130 (28.7)	2.380 (60.5)	
GA/CSGA-P/NPT-49B	2-11 NPT	1.625 (41.3)	1.200 (30.5)	2.440 (62.0)	
GA/CSGA-R/NPT-49B	2-11 NPT	1.750 (44.5)	1.250 (31.8)	2.750 (69.9)	HRSR 300
GA/CSGA-S/NPT-49B	2-11 NPT	1.875 (47.6)	1.380 (35.1)	2.880 (73.2)	
GA/CSGA-T/NPT-49B	2 1/2-8 NPT	2.062 (52.4)	1.560 (39.6)	3.130 (79.5)	HRSR 400
GA/CSGA-V/NPT-49B	2 1/2-8 NPT	2.187 (55.5)	1.690 (42.9)	3.250 (82.6)	

© 2013 Glenair, Inc.

GLENAIR, INC. • 1211 AIR WAY • GLENDALE, CA 91201-2497 • 818-247-6000 • FAX 818-500-9912
www.glenair.com E-Mail: sales@glenair.com

GA/CSGA-**/NPT-49B
Female Pipe Thread
Stainless Steel Cable Shield Grounding Assembly

Basic Number	National Pipe Thread Fitting Size *(Table I)*	Mod Code *(Stainless Steel)*
GA/CSGA	**/NPT	49B

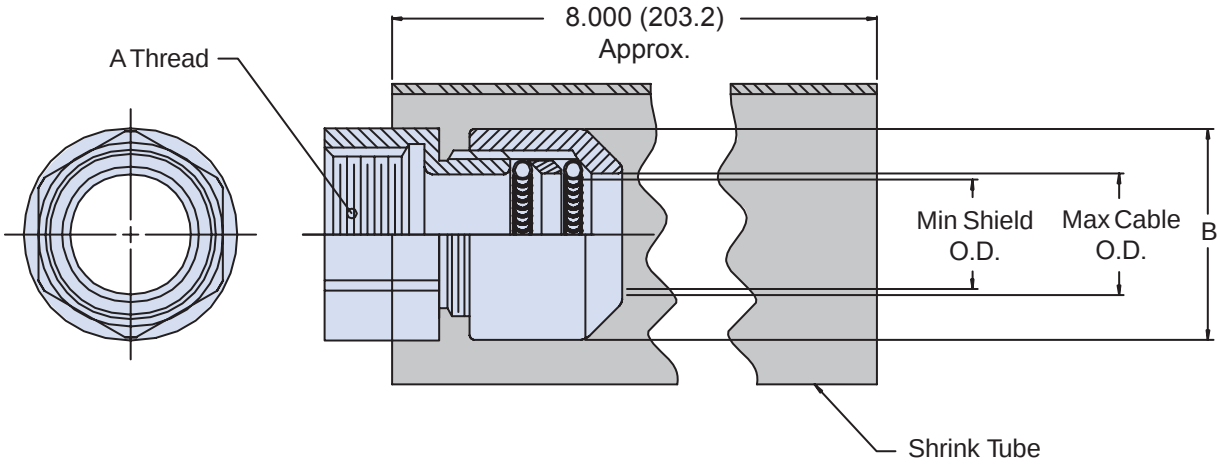

APPLICATION NOTES

1. Assembly identified with manufacurer's code identification number (Glenair, part number and classification code 490).
2. Glenair series 600 backshell assembly tools are recommended for assembly and installation.
3. Material / Finish:
   Adapters - CRES/passivate.
   Ferrule, grounding spring - CRES/passivate.
   Tubing - Heat shrinkable, flame retardant, with adhesive.
4. Metric dimensions (mm) are indicated in parentheses.

© 2013 Glenair, Inc. CAGE Code 06324 Printed in U.S.A.

GA/CSGA-**/NPT-49B
Female Pipe Thread
Stainless Steel Cable Shield Grounding Assembly

TABLE I: Stuffing Tube Size and Adapter Dimensions

Glenair Part No.	A Thread	Max Cable O.D.	Min Shield O.D.	B Max	Shrink Tube Number
GA/CSGA-A/NPT-49B	3/8-18 NPT	.406 (10.3)	.200 (5.1)	1.120 (28.4)	HRSR 125
GA/CSGA-B/NPT-49B	1/2-14 NPT	.515 (13.1)	.260 (6.6)	1.120 (28.4)	
GA/CSGA-C/NPT-49B	3/4-14NPT	.640 (16.3)	.400 (10.2)	1.320 (33.5)	HRSR 175
GA/CSGA-D/NPT-49B	3/4-14 NPT	.750 (19.1)	.400 (10.2)	1.630 (41.4)	
GA/CSGA-E/NPT-49B	1-11 1/2 NPT	.812 (20.6)	.430 (10.9)	1.630 (41.4)	
GA/CSGA-F/NPT-49B	1-11 1/2 NPT	.843 (21.4)	.470 (11.9)	1.750 (44.5)	HRSR 200
GA/CSGA-G/NPT-49B	1-11 1/2 NPT	.953 (24.2)	.580 (14.7)	1.880 (47.8)	
GA/CSGA-J/NPT-49B	1/4-11 1/2 NPT	1.062 (27.0)	.690 (17.5)	1.880 (47.8)	
GA/CSGA-K/NPT-49B	1/4-11 1/2 NPT	1.172 (29.8)	.800 (20.3)	2.060 (5.2)	HRSR 250
GA/CSGA-L/NPT-49B	1/4-11 1/2 NPT	1.265 (32.1)	.890 (22.6)	2.180 (55.4)	
GA/CSGA-M/NPT-49B	1/2-11 1/2 NPT	1.406 (35.7)	1.010 (25.7)	2.320 (58.9)	
GA/CSGA-N/NPT-49B	1/2-11 1/2 NPT	1.515 (38.5)	1.130 (28.7)	2.380 (60.5)	
GA/CSGA-P/NPT-49B	2-11 NPT	1.625 (41.3)	1.200 (30.5)	2.440 (62.0)	
GA/CSGA-R/NPT-49B	2-11 NPT	1.750 (44.5)	1.250 (31.8)	2.750 (69.9)	HRSR 300
GA/CSGA-S/NPT-49B	2-11 NPT	1.875 (47.6)	1.380 (35.1)	2.880 (73.2)	
GA/CSGA-T/NPT-49B	2 1/2-8 NPT	2.062 (52.4)	1.560 (39.6)	3.130 (79.5)	HRSR 400
GA/CSGA-V/NPT-49B	2 1/2-8 NPT	2.187 (55.5)	1.690 (42.9)	3.250 (82.6)	

© 2013 Glenair, Inc.

GLENAIR, INC. • 1211 AIR WAY • GLENDALE, CA 91201-2497 • 818-247-6000 • FAX 818-500-9912
www.glenair.com E-Mail: sales@glenair.com

GA/CSGA-**/NPT
Female Pipe Thread
Cable Shield Grounding Assembly

Basic Number		National Pipe Thread Fitting Size *(Table I)*
GA/CSGA	-	**/NPT

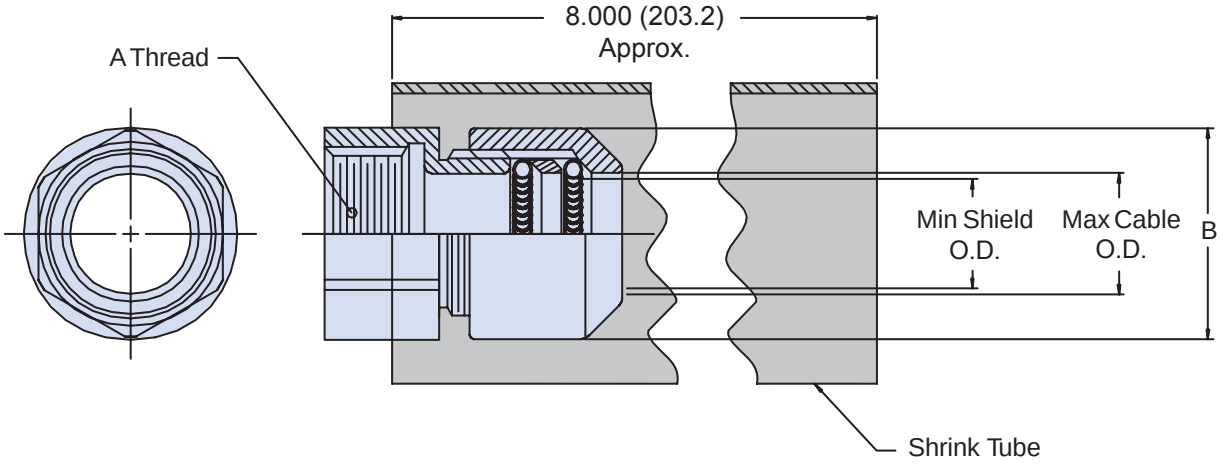

APPLICATION NOTES

1. Assembly identified with manufacurer's code identification number (Glenair, part number and classification code 490).
2. Glenair series 600 backshell assembly tools are recommended for assembly and installation.
3. Material / Finish:
   Adapters - Al alloy/cad/O.D. over electroless nickel (500 hr salt spray).
   Ferrule, grounding spring - CRES/passivate.
   Tubing - Heat shrinkable, flame retardant, with adhesive.
4. Metric dimensions (mm) are indicated in parentheses.

© 2013 Glenair, Inc. CAGE Code 06324 Printed in U.S.A.

GA/CSGA-**/NPT
Female Pipe Thread
Cable Shield Grounding Assembly

TABLE I: Stuffing Tube Size and Adapter Dimensions

Glenair Part No.	A Thread	Max Cable O.D.	Min Shield O.D.	B Max	Shrink Tube Number
GA/CSGA-1A/NPT	3/8-18 NPT	.406 (10.3)	.200 (5.1)	1.120 (28.4)	HRSR 125
GA/CSGA-2B/NPT	1/2-14 NPT	.515 (13.1)	.260 (6.6)	1.120 (28.4)	
GA/CSGA-3C/NPT	3/4-14NPT	.640 (16.3)	.400 (10.2)	1.320 (33.5)	HRSR 175
GA/CSGA-3D/NPT	3/4-14 NPT	.750 (19.1)	.400 (10.2)	1.630 (41.4)	
GA/CSGA-4E/NPT	1-11 1/2 NPT	.812 (20.6)	.430 (10.9)	1.630 (41.4)	
GA/CSGA-4F/NPT	1-11 1/2 NPT	.843 (21.4)	.470 (11.9)	1.750 (44.5)	HRSR 200
GA/CSGA-4G/NPT	1-11 1/2 NPT	.953 (24.2)	.580 (14.7)	1.880 (47.8)	
GA/CSGA-5J/NPT	1 1/4-11 1/2 NPT	1.062 (27.0)	.690 (17.5)	1.880 (47.8)	
GA/CSGA-5K/NPT	1 1/4-11 1/2 NPT	1.172 (29.8)	.800 (20.3)	2.060 (5.2)	HRSR 250
GA/CSGA-5L/NPT	1 1/4-11 1/2 NPT	1.265 (32.1)	.890 (22.6)	2.180 (55.4)	
GA/CSGA-6M/NPT	1 1/2-11 1/2 NPT	1.406 (35.7)	1.010 (25.7)	2.320 (58.9)	
GA/CSGA-6N/NPT	1 1/2-11 1/2 NPT	1.515 (38.5)	1.130 (28.7)	2.380 (60.5)	
GA/CSGA-7P/NPT	2-11 NPT	1.625 (41.3)	1.200 (30.5)	2.440 (62.0)	
GA/CSGA-7R/NPT	2-11 NPT	1.750 (44.5)	1.250 (31.8)	2.750 (69.9)	HRSR 300
GA/CSGA-7S/NPT	2-11 NPT	1.875 (47.6)	1.380 (35.1)	2.880 (73.2)	
GA/CSGA-8T/NPT	2 1/2-8 NPT	2.062 (52.4)	1.560 (39.6)	3.130 (79.5)	HRSR 400
GA/CSGA-8V/NPT	2 1/2-8 NPT	2.187 (55.5)	1.690 (42.9)	3.250 (82.6)	

© 2013 Glenair, Inc. CAGE Code 06324 Printed in U.S.A.

770-008
Straight Heat Shrink Boot
For Use in Naval Shipboard Electronic Equipment

Product Series	Basic Number *Lipped Boot without Eyelet*			Size *Table I*	Adhesive Lined *(Table III)* *Omit for No Adhesive*
770	- 008	S	2	03	W1BLK
		Part Angle *S = Straight*	Material *Table II*		

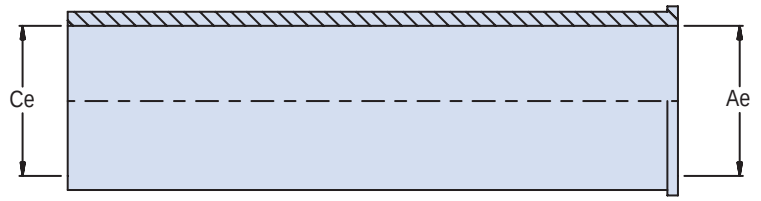

As Supplied

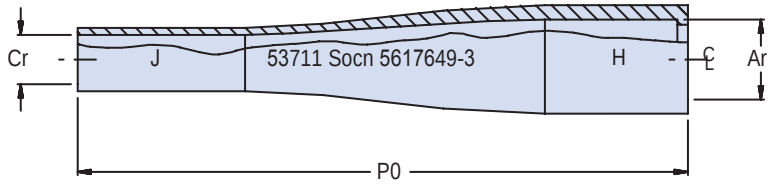

Recovered

APPLICATION NOTES

1. Please refer to the AEGIS Boot Approval document at: http://www.glenair.com/navy_connectors/index.htm

© 2013 Glenair, Inc. CAGE Code 06324 Printed in U.S.A.

770-008
Straight Heat Shrink Boot
For Use in Naval Shipboard Electronic Equipment

Glenair®

TABLE I: Size, NAVSEA Part No., and Dimensions						
Size	NAVSEA Part No.	Ae Min Dia Expanded	Ar Max Dia Recovered	Ce Min Dia Expanded	Cr Max Dia Recovered	PO ±10%
00	5617649	.827 (21.0)	.551 (14.0)	.630 (16.0)	.209 (5.3)	5.315 (135.0)
01	5617649-1	.984 (25.0)	.650 (16.5)	.984 (25.0)	.331 (8.4)	6.024 (153.0)
02	5617649-2	1.299 (33.0)	.799 (20.3)	1.299 (33.0)	.429 (10.9)	6.024 (153.0)
03	5617649-3	1.693 (43.0)	.902 (22.9)	1.693 (43.0)	.559 (14.2)	6.890 (175.0)
04	5617649-4	2.087 (53.0)	1.098 (27.6)	2.087 (53.0)	.701 (17.8)	6.890 (175.0)
05	5617649-5	2.835 (72.0)	1.449 (36.8)	2.835 (72.0)	.949 (24.1)	7.244 (184.0)

TABLE II: Material		
No.	Compound	Material Description
2	2010	Low Smoke Hazard Material

TABLE III: Adhesive	
Symbol	Adhesive Description
W1BLK	120°C Zero Halogen/Hot Melt, Black

© 2013 Glenair, Inc.

GLENAIR, INC. • 1211 AIR WAY • GLENDALE, CA 91201-2497 • 818-247-6000 • FAX 818-500-9912
www.glenair.com E-Mail: sales@glenair.com

SERIES 14

COST SAVER

EMI/RFI Composite Junction Boxes

Lightweight ♦ Corrosion-Free ♦ Shielded ♦ Sealed

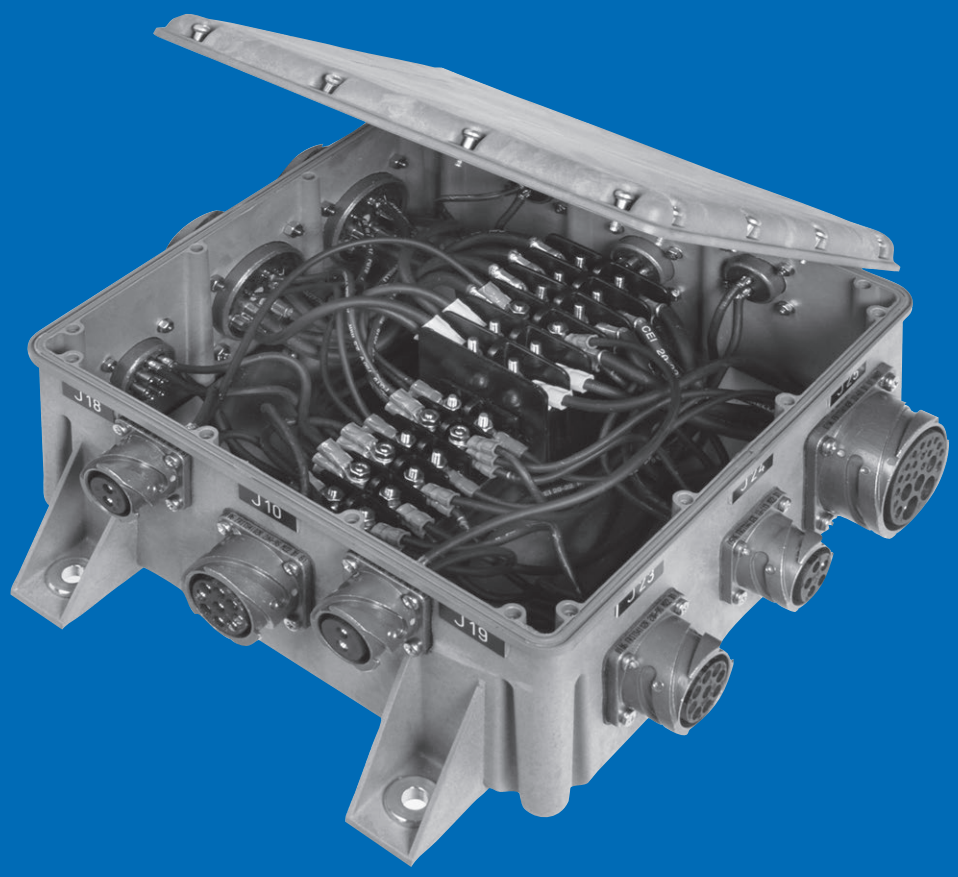

Glenair Series 14 CostSaver Composite EMI/RFI Junction Boxes can be specially designed and outfitted for any application requirement. We offer a dozen standard sizes that can be equipped with your selection of feedthrough fittings, connectors, grounding devices, terminal boards—you name it. For complete information please see our composite products catalog or visit or website, www.glenair.com

Glenair®

1211 Air Way • Glendale, CA 91201-2497 • Tel: 818-247-6000 • Fax: 818-500-9912 • E-Mail: sales@glenair.com

Glenair Composite Electrical Boxes Resist Corrosion and Reduce Costly and Time-Consuming Maintenance

Fleet managers are encouraged to replace corroded or leaking electrical metal boxes with their composte counterparts. Glenair composite boxes eliminate the costly repeated need to remove corroded metal boxes, re-preserve the ship's hull, installing a new box, and re-connecting the electrical system. Widespread use of Glenair composite boxes can eliminate the need for ships to paint, repair and replace topside electrical boxes.

Glenair composite boxes provide corrosion-resistant alternatives to the metal boxes listed in MIL-T-24649 that covers most standard telephone boxes and MIL-E-24142. Glenair composite boxes were developed to replace metal boxes on a one-for-one form fit and function basis.

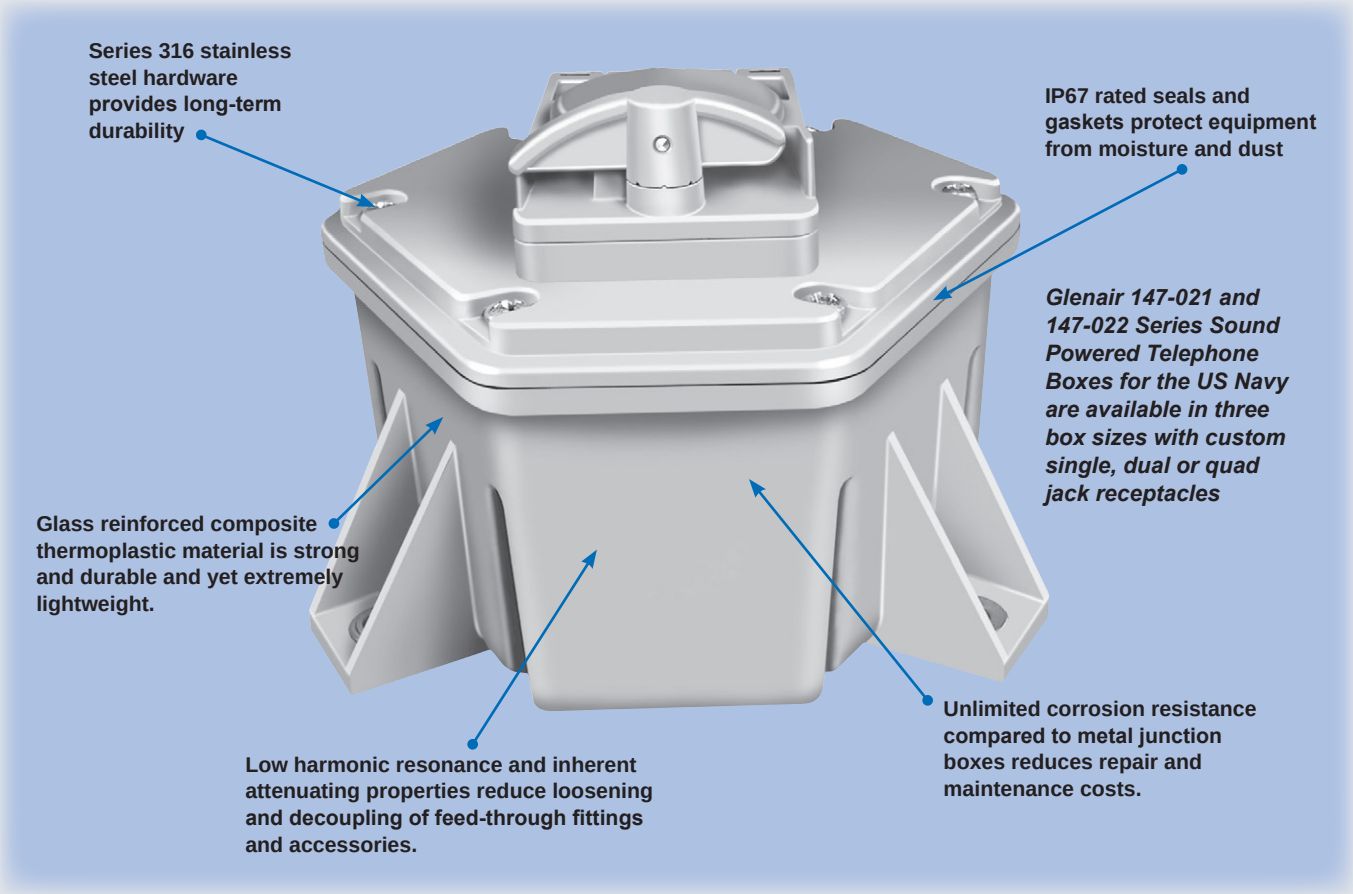

© 2013 Glenair, Inc. CAGE Code 06324 Printed in U.S.A.

Glenair Composite Box National Stock Numbers

Glenair composite boxes have passed all shock, fire and EMI testing requirement. SCD-6922 authorizes the use of composite boxes on surface ships. NAVSEA standard drawing 803-6983506 Rev-A *"Electrical Enclosures, Composite, Installation and Details"* provides box installation details and instructions.

The following national stock numbers have been established for these Navy approved, corrosion-proof composite boxes:

Glenair Composite Box National Stock Numbers

Part Number Ref No.	FLIS Nomenclature	New Composite NSN	Eq. Brass Box NSW	Part/Symbol Number	Description
147-021XMS-02	Enclosure, Composite	5935-01-572-6657	5935-00-552-6790	SYMBOL 2842	Dual SPT
147-021XMS-03	Enclosure, Composite	5935-01-572-5631	5935-00-355-4739	SYMBOL 2843	Quad SPT
147-022XMS-01	Enclosure, Composite	5935-01-572-5487	5935-00-552-6791	SYMBOL 2841	Single SPT
140-060XMS-01	Junction Box, Composite	5975-01-556-7957	5975-00-122-6048	MIL-E-24142/1	Small
140-060XMS-02	Junction Box, Composite	5975-01-557-2672	5975-00-357-0974	MIL-E-24142-/4-001	Medium
140-060XMS-03	Junction Box, Composite	5975-01-557-2679	5395-01-185-3693	ENC6X9	Large
140-060XMS-05	Junction Box, Composite	5975-01-556-7948	None	No NSN Identified	Small Round
140-060XMS-01T4	Junction Box, Composite	5940-01-556-9434	5940-00-351-2223	SYMBOL 528	Small
140-060XMS-01T6	Junction Box, Composite	5940-01-556-9443	NICN: LLCA42632	SYMBOL 444	Small
140-060XMS-05T4	Junction Box, Composite	5940-01-557-2712	5940-00-024-0128	SYMBOL 400.1	Small Round
140-060XMS-05T2	Junction Box, Composite	5940-01-557-2579	5940-00-351-0000	M24558/1-520.1	Small Round
140-060XMS-03T1	Junction Box, Composite	5940-01-556-9489	5940-00-215-5962	SYMBOL 432.1	Large
140-060XMS-03T2	Junction Box, Composite	5940-01-557-2564	5940-00-080-3931	SYMBOL 434	Large
140-060XMS-03T5	Junction Box, Composite	5940-01-557-2578	5940-00-503-4204	SYMBOL 529	Large
140-060XMS-03T9	Junction Box, Composite	5940-01-557-2582	5940-00-215-5963	SYMBOL 433.1	Large
140-060XMS-03T10	Junction Box, Composite	5940-01-556-9494	5940-00-2226	SYMBOL 522.1	Large
140-060XMS-03T11	Junction Box, Composite	5940-01-557-2563	5940-01-387-4412	M24558/8-446	Large
140-060XMS-03T12	Junction Box, Composite	5940-01-556-9499	4940-00-351-2225	M24558/9-525	Large
140-060XMS-01T3	Junction Box, Composite	5975-01-556-7967	5940-00-215-5959	SYMBOL 435.1	Small
147-023XMS-02	Electrical Box, Composite	5940-01-557-2667	5935-00-086-8922	SYMBOL 1099.1	Single 115V
147-023XMS-01	Electrical Box, Composite	5940-01-557-2645	5935-00-720-0527	SYMBOL 35.1	Single 115V
147-032XMS-0005G	Electrical Box, Composite	5940-01-557-2719	5935-01-145-3182	MIL-R-2726-71 SYMBOL 101	Single 125V
147-033XMS-0003	Electrical Box, Composite	5940-01-557-2725	5935-01-415-0883	SYMBOL 1098-1	Single 115V
147-020XMS-02	Junction Box, Composite	5975-01-556-9504	None	No NSN Identified	Dual 115V
147-020XMS-05	Electrical Box, Composite	5940-01-557-2634	None	No NSN Identified	Dual 115V

© 2013 Glenair, Inc. CAGE Code 06324 Printed in U.S.A.

Glenair Composite Box Lid Replacement National Stock Numbers

Glenair Composite Box Lid National Stock Numbers

Part Number Ref No.	FLIS Nomenclature	New Composite NSN	Eq. Brass Box NSW	Use With Part Number	Description
140-065XMS-05	Cover, Terminal Box	5935-01-572-5480	None	147-021XMS-02	Lid, Composite
140-065XMS-06	Cover, Terminal Box	5935-01-572-5483	None	147-021XMS-03	Lid, Composite
140-065XMS-14	Cover, Terminal Box	5940-01-557-2622	None	140-060XMS-05, 05T2 and 05T4	Lid, Composite
140-065XMS-01	Cover, Terminal Box	5940-01-557-2612	None	140-060XMS-01, 01T3, 01T4 and 01T6	Lid, Composite
140-065XMS-03	Cover, Junction Box	5975-01-556-9522	None	140-060XMS-02	Lid, Composite
140-065XMS-12	Cover, Terminal Box	5935-01-572-5845	None	147-022X0-01	Lid, Composite
630-038X0-02K	Cover, Junction Box	5975-01-556-9582	None	022X0-01, 147-021X0-02 and 147-021X0-03	Cover, Composite with Spring Latch
140-065XMS-15	Cover, Terminal Box	5940-01-557-2626	None	140-060XMS-03, 03T1, 03T5 03T9, 03T10, 03T11, AND 03T12	Lid, Composite
140-065XMS-17	Cover, Terminal Box	5940-01-557-2616	None	147-023XMS-02	Lid, Composite
630-038XO-04K	Cover, Junction Box	5975-01-556-9627	None	147-023XMS-02 and 147020XMS-05	Cover, Composite with Spring Latch
140-065XMS-13	Cover, Terminal Box	5940-01-557-2585	None	147-023XMS-01	Lid, Composite
140-065XMS-08	Cover, Terminal Box	5940-01-557-2573	None	147-020XMS-02	Lid, Composite
630-038X0-01K	Cover, Junction Box	5975-01-556-9621	None	147023XMS-01 and 147-023XMS-02	Cover, Composite with Spring Latch
140-065XMS-16	Cover, Terminal Box	5940-01-557-2587	None	147-020XMS-05	Lid, Composite
227-059X004	Connector, Sound Powered	5935-01-558-3700	None	147-022X0-01 and 147-021X0-02	SPT Jack, Composite Panel

© 2013 Glenair, Inc. CAGE Code 06324 Printed in U.S.A.

147-021XMS-02
(NSN: 5935-01-572-6657) (Symbol 2842)
Dual Sound Powered Composite Telephone Box

Basic Part Number	Finish *(See Table I)*	Basic Box Number
147-021	XMS	02

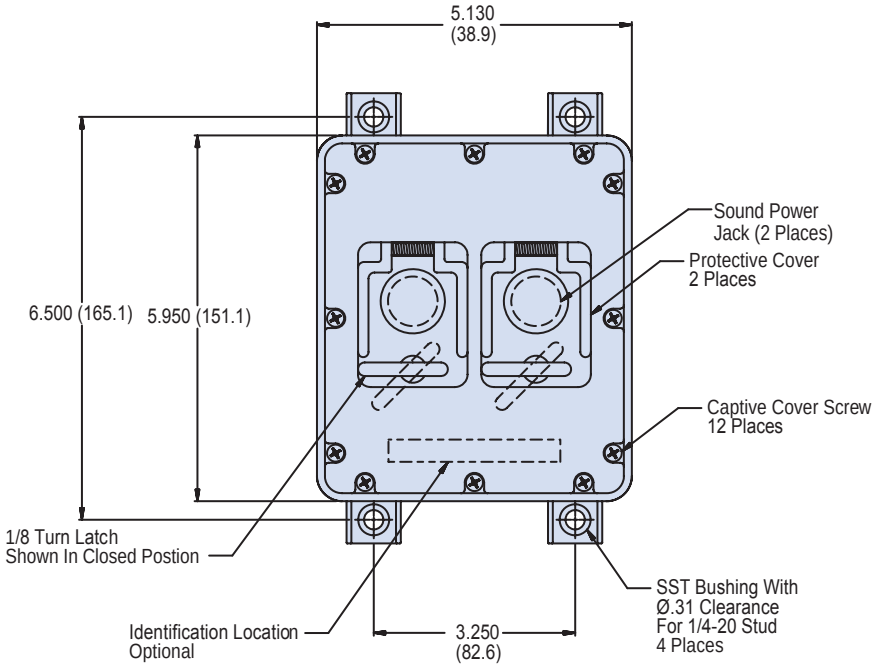

FIGURE 1 TOP VIEW

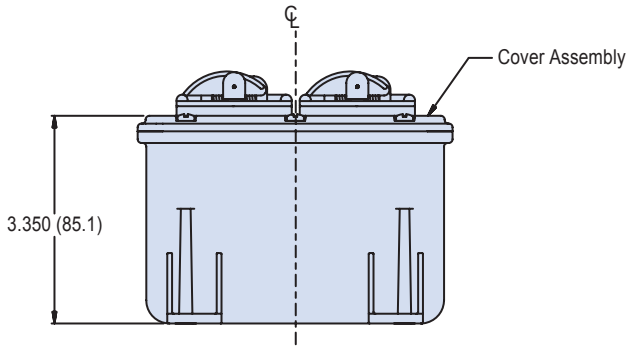

© 2013 Glenair, Inc. CAGE Code 06324 Printed in U.S.A.

147-021XMS-02
(NSN: 5935-01-572-6657) (Symbol 2842)
Dual Sound Powered Composite Telephone Box

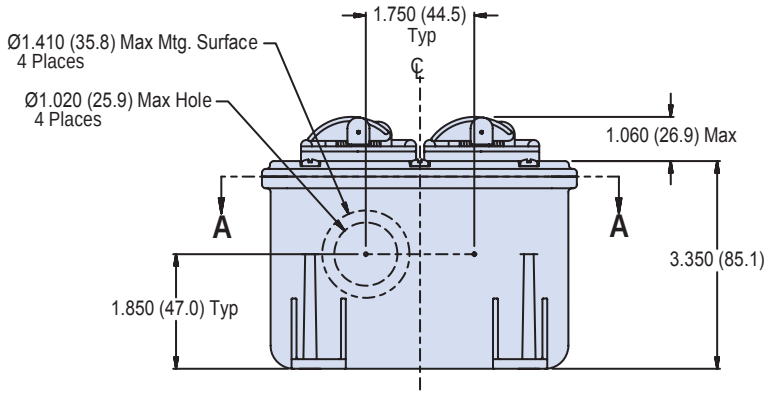

FIGURE 2

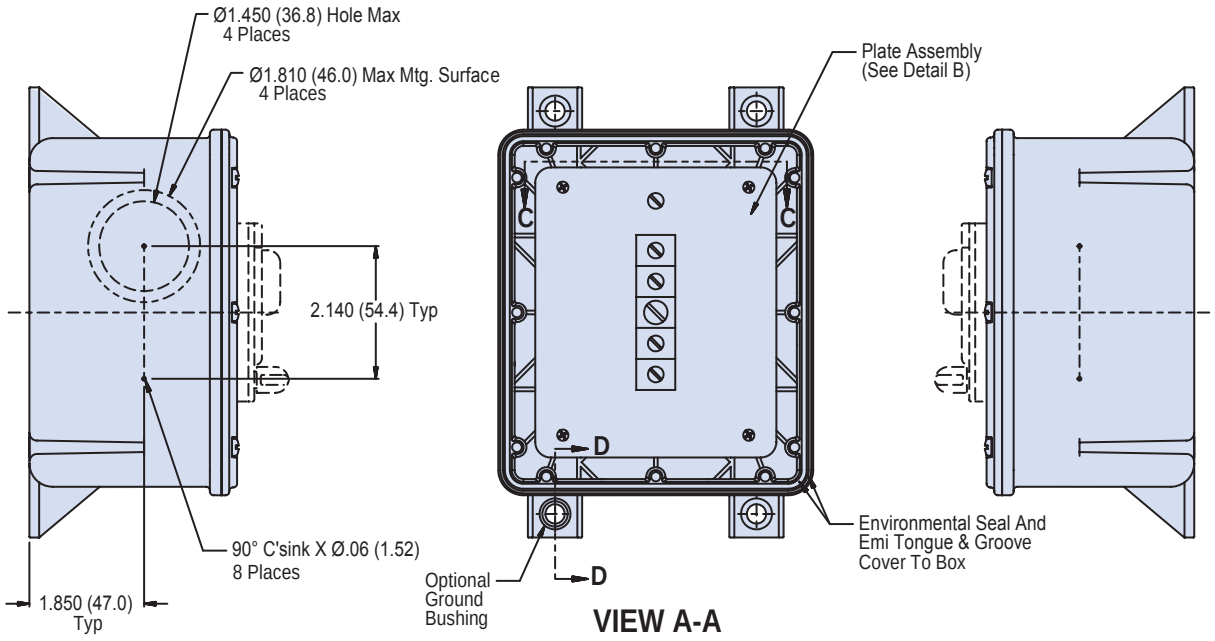

VIEW A-A

© 2013 Glenair, Inc. CAGE Code 06324 Printed in U.S.A.

147-021XMS-02
(NSN: 5935-01-572-6657)
Dual Sound Powered Composite Telephone Box

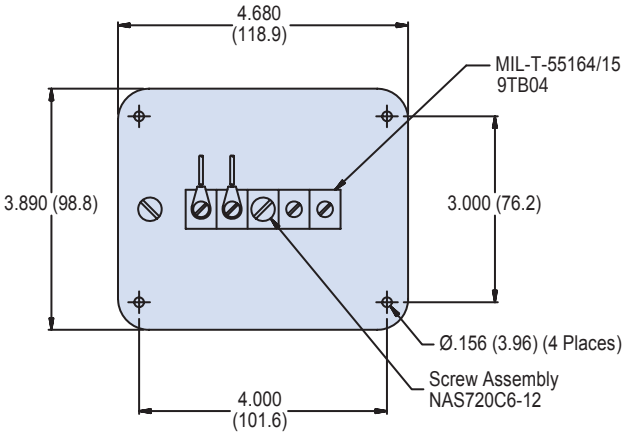

DETAIL B

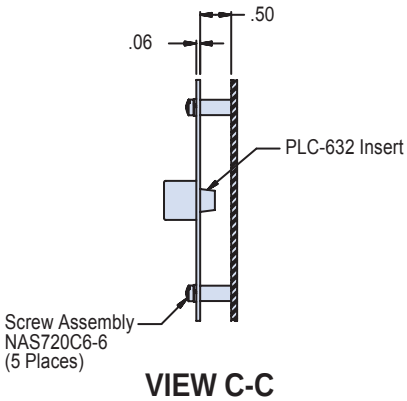

VIEW C-C

TABLE I: Finish	
Symbol	**Description**
XMS	Internal Surfaces - Electroless Nickel Exterior Surfaces - Unplated Light Grey Color
XO	No Plating

© 2013 Glenair, Inc. CAGE Code 06324 Printed in U.S.A.

147-021XMS-02
(NSN: 5935-01-572-6657)
Dual Sound Powered Composite Telephone Box

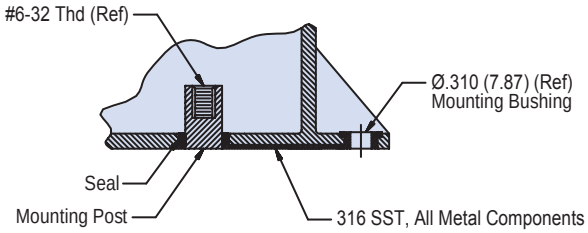

SECTION D-D

Electrical Ground Through Internal Mounting Post To External Mounting Bushing

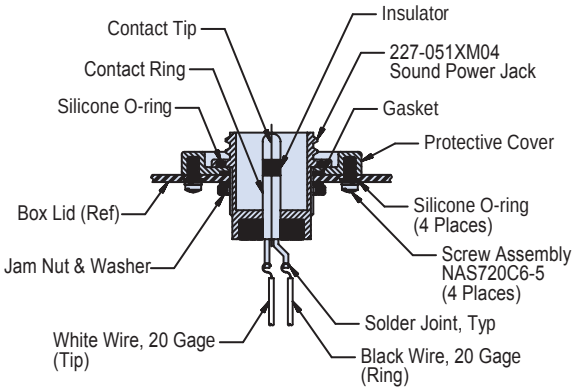

SOUND POWER JACK SECTION VIEW

(2 Places)

APPLICATION NOTES

1. Assembly identified with manufacurer's code identification number (Glenair, part number and date code).
2. Color may be subject to fading, however UV exposure will not affect material physical properties.
3. Assembly is similar to symbol part numbers and require installation in accordance with NAVSEA drawing 803-6983506.
4. Material / Finish:
   Box, cover - Thermoplastic grey color/see Table I.
   Hardware - 316 SST/passivate.
   Seals and gaskets - Silicone/N.A.
   Mounting Plate - 300 series SST/passivate.
5. Metric dimensions (mm) are indicated in parentheses.

© 2013 Glenair, Inc. CAGE Code 06324 Printed in U.S.A.

147-022XMS-01
(NSN: 5935-01-572-5487) (Symbol 2841)
Single Sound Powered Composite Telephone Box

Basic Part Number	Finish *(See Table I)*	Basic Box Number
147-022	XMS	01

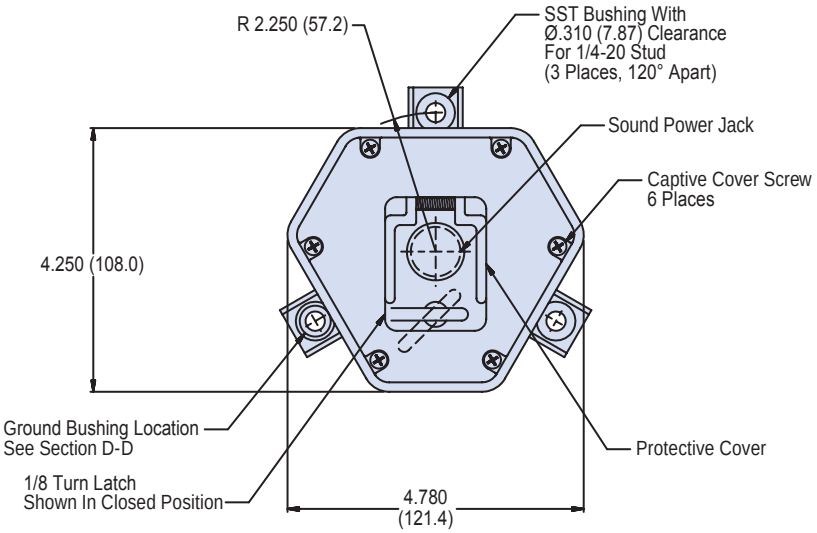

FIGURE 1 TOP VIEW

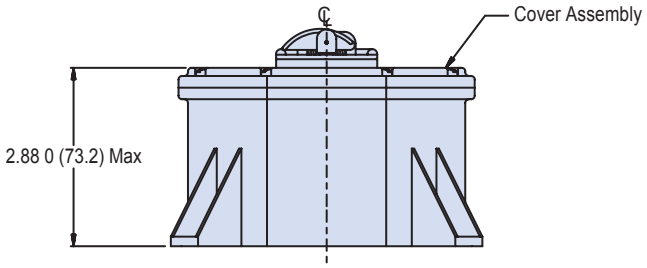

© 2013 Glenair, Inc. CAGE Code 06324 Printed in U.S.A.

147-022XMS-01
(NSN: 5935-01-572-5487) (Symbol 2841)
Single Sound Powered Composite Telephone Box

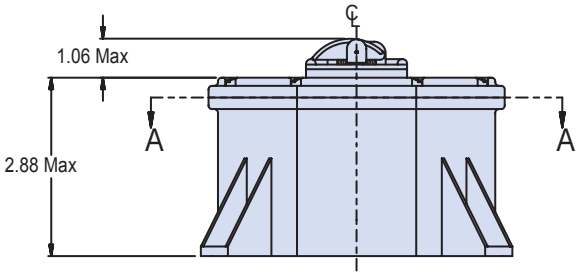

FIGURE 2

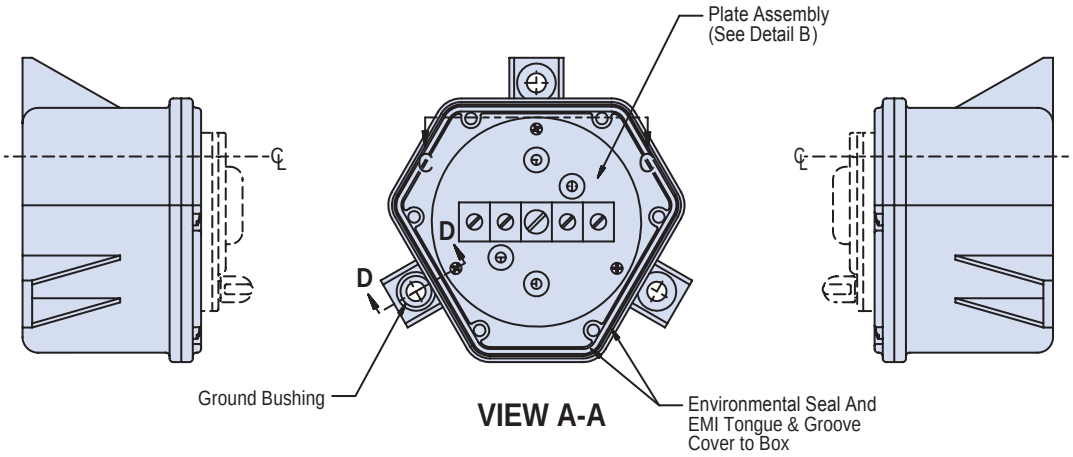

VIEW A-A

© 2013 Glenair, Inc. CAGE Code 06324 Printed in U.S.A.

147-022XMS-01
(NSN: 5935-01-572-5487)
Single Sound Powered Composite Telephone Box

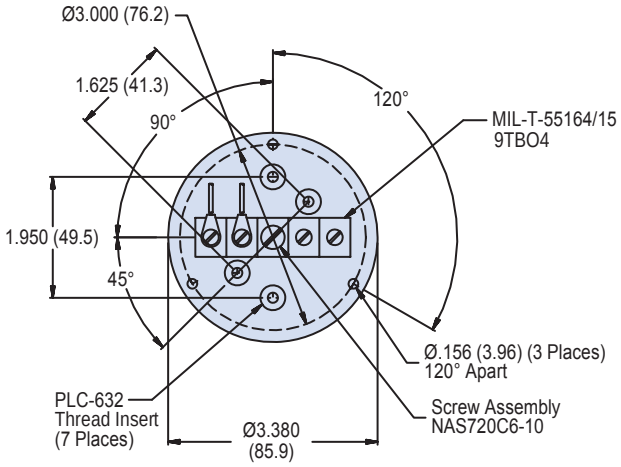

DETAIL B

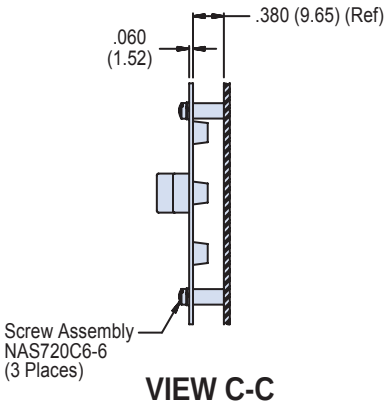

VIEW C-C

APPLICATION NOTES

1. Assembly identified with manufacurer's code identification number (Glenair, part number and date code).
2. Color may be subject to fading, however UV exposure will not affect material physical properties.
3. Assembly is similar to symbol part numbers and require installation in accordance with NAVSEA drawing 803-6983506.
4. Material / Finish:
   Box, cover - Thermoplastic grey color/see Table I.
   Hardware - 316 SST/passivate.
   Seals and gaskets - Silicone/N.A.
   Mounting Plate - 300 series SST/passivate.
5. Metric dimensions (mm) are indicated in parentheses.

© 2013 Glenair, Inc.

GLENAIR, INC. • 1211 AIR WAY • GLENDALE, CA 91201-2497 • 818-247-6000 • FAX 818-500-9912
www.glenair.com
E-Mail: sales@glenair.com

147-022XMS-01
(NSN: 5935-01-572-5487)
Single Sound Powered Composite Telephone Box

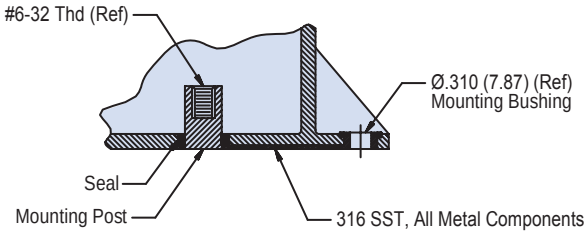

SECTION D-D

Electrical Ground Through Internal Mounting Post To External Mounting Bushing

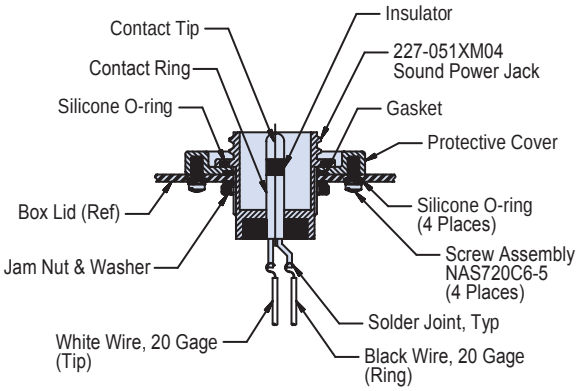

SOUND POWER JACK SECTION VIEW

(1 Place)

TABLE I: Finish	
Symbol	**Description**
XMS	Internal Surfaces - Electroless Nickel Exterior Surfaces - Unplated Light Grey Color
XO	No Plating

© 2013 Glenair, Inc. CAGE Code 06324 Printed in U.S.A.

147-021XMS-03
(NSN: 5935-01-572-5631) (Symbol 2843)
Single Sound Powered Composite Telephone Box

Basic Part Number	Finish *(See Table I)*	Basic Box Number
147-022	XMS	01

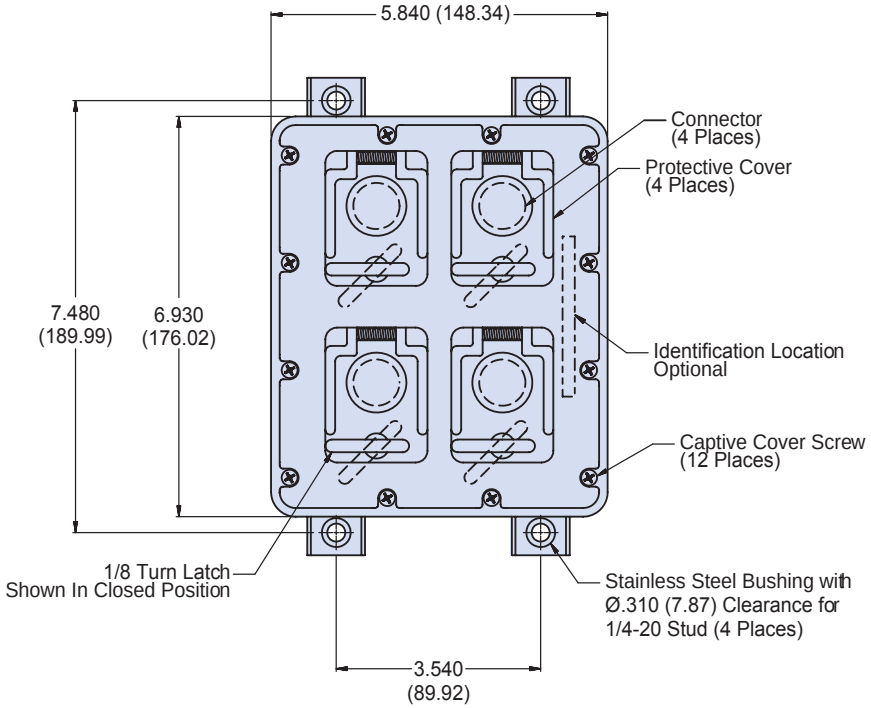

FIGURE 1 TOP VIEW

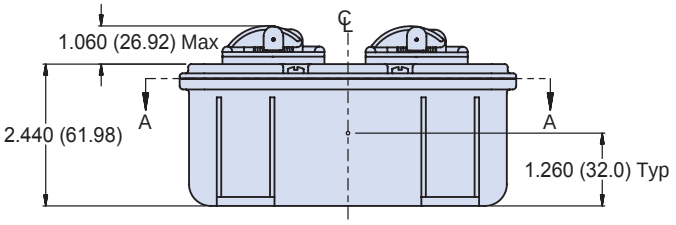

FIGURE 2

© 2013 Glenair, Inc.

GLENAIR, INC. • 1211 AIR WAY • GLENDALE, CA 91201-2497 • 818-247-6000 • FAX 818-500-9912
www.glenair.com
E-Mail: sales@glenair.com

147-021XMS-03
(NSN: 5935-01-572-5631) (Symbol 2843)
Single Sound Powered Composite Telephone Box

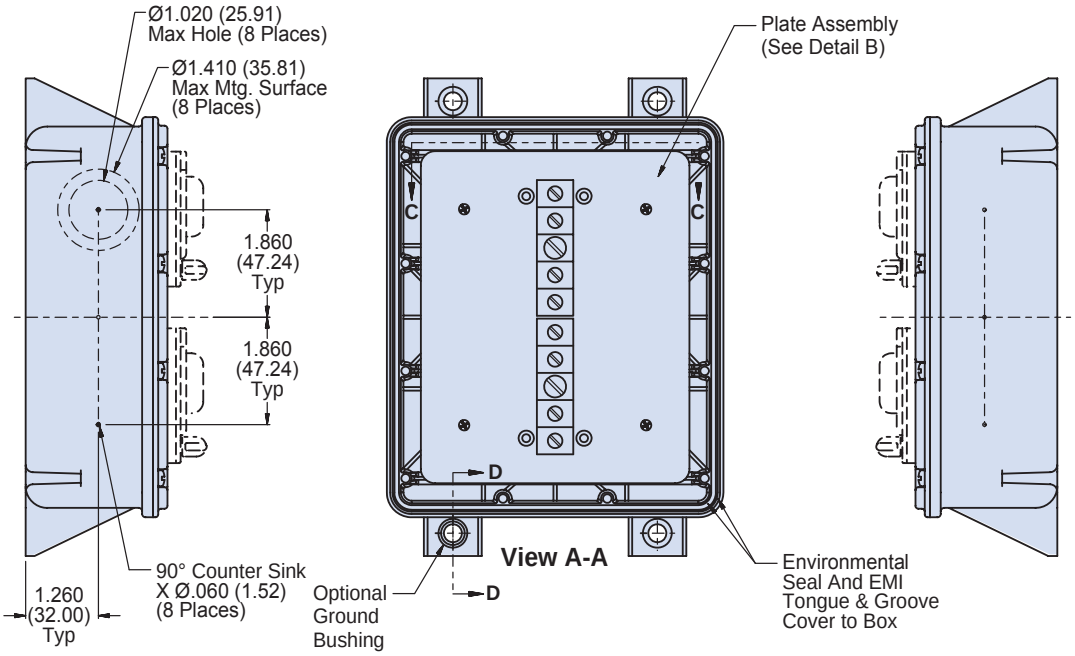

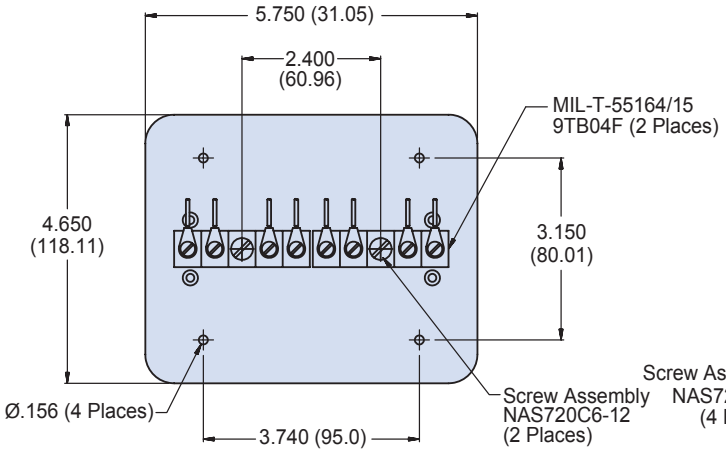

DETAIL B

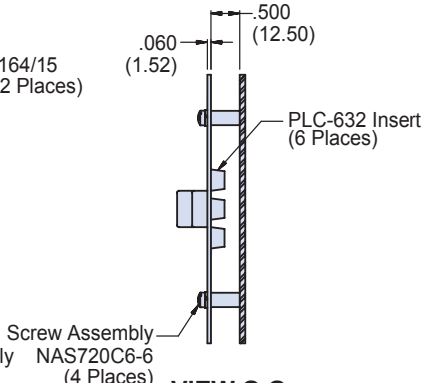

VIEW C-C

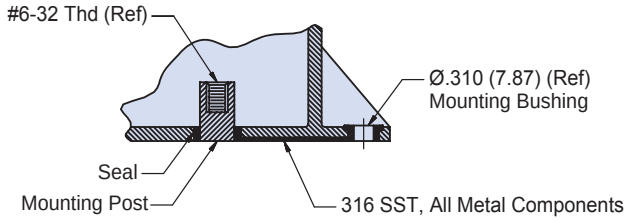

SECTION D-D

Electrical Ground Through Internal Mounting Post To External Mounting Bushing

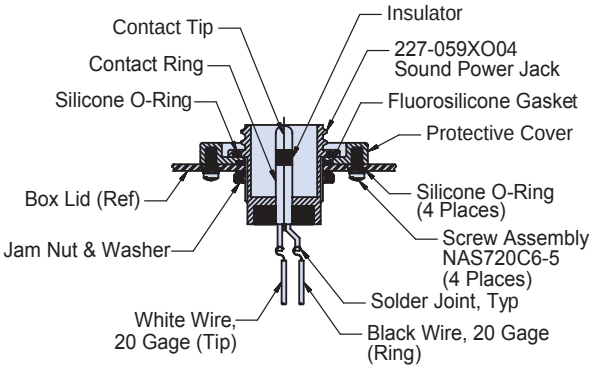

SOUND POWER JACK SECTION VIEW

(4 Places)

© 2013 Glenair, Inc. CAGE Code 06324 Printed in U.S.A.

140-060XMS-01
(NSN: 5975-01-556-7957)
10 Terminal Grounded Composite Junction Box
15 Ft. Submersion

Basic Part Number	Finish *(See Table I)*	Basic Box Number		Dash Number *See Table III*
140-060	XMS	- 01	-	T1

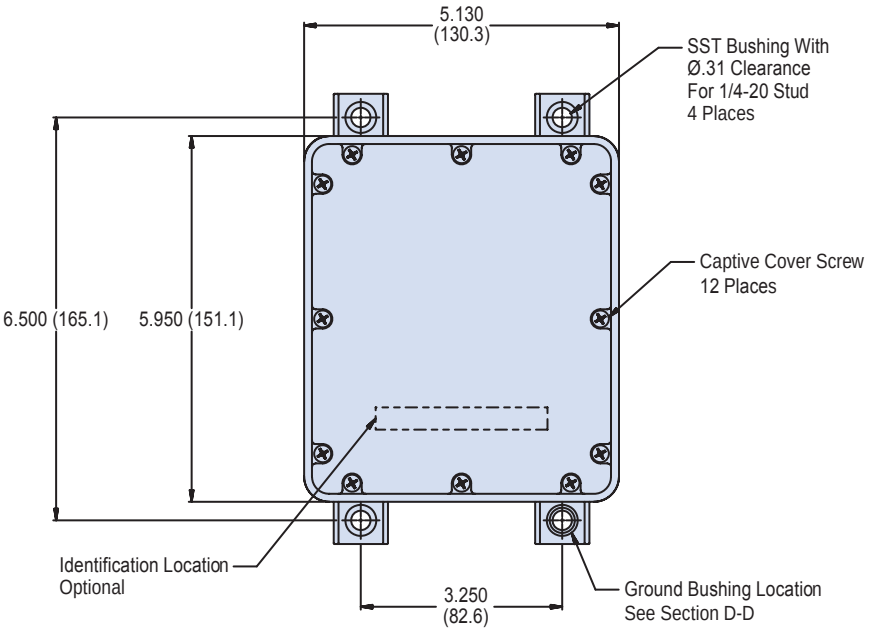

FIGURE 1 TOP VIEW

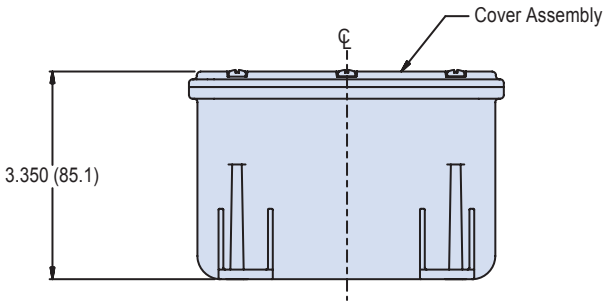

© 2013 Glenair, Inc.

GLENAIR, INC. • 1211 AIR WAY • GLENDALE, CA 91201-2497 • 818-247-6000 • FAX 818-500-9912
www.glenair.com
E-Mail: sales@glenair.com

140-060XMS-01
(NSN: 5975-01-556-7957)
10 Terminal Grounded Composite Junction Box
15 Ft. Submersion

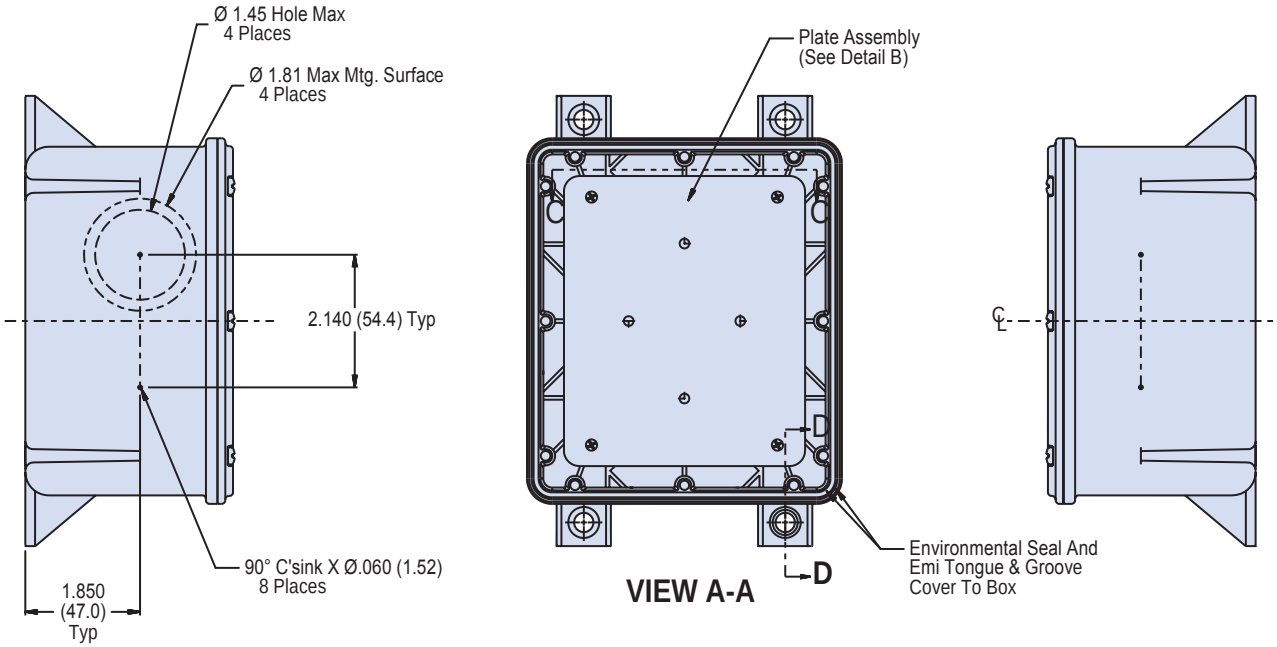

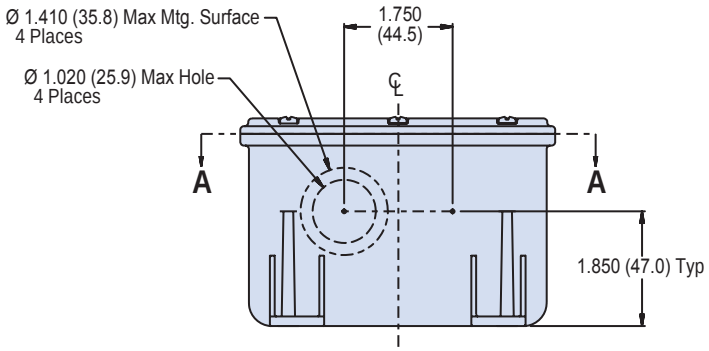

FIGURE 2

© 2013 Glenair, Inc.

GLENAIR, INC. • 1211 AIR WAY • GLENDALE, CA 91201-2497 • 818-247-6000 • FAX 818-500-9912
www.glenair.com
E-Mail: sales@glenair.com

140-060XMS-01
(NSN: 5975-01-556-7957)
Grounded Composite Junction Box
15 Ft. Submersion

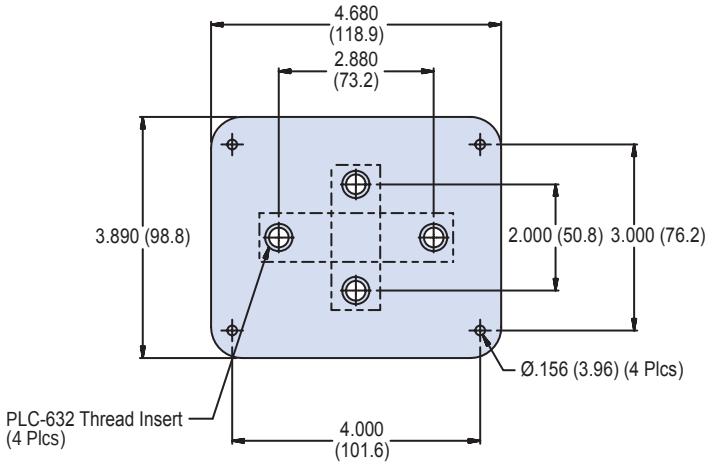

DETAIL B

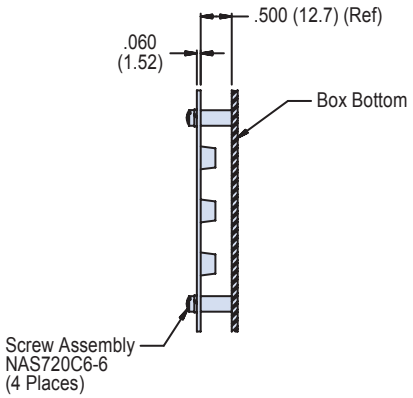

VIEW C-C

APPLICATION NOTES

1. Assembly identified with manufacurer's code identification number (Glenair, part number and date code).
2. Color may be subject to fading, however UV exposure will not affect material physical properties.
3. Assembly is similar to symbol part numbers and require installation in accordance with NAVSEA drawing 803-6983506.
4. Material / Finish:
   Box, cover - Thermoplastic grey color/see Table I.
   Hardware - 316 SST/passivate.
   Seals and gaskets - Silicone/N.A.
   Mounting Plate - 300 series SST/passivate.
5. Metric dimensions (mm) are indicated in parentheses.

© 2013 Glenair, Inc.

GLENAIR, INC. • 1211 AIR WAY • GLENDALE, CA 91201-2497 • 818-247-6000 • FAX 818-500-9912
www.glenair.com
E-Mail: sales@glenair.com

140-060XMS-01
(NSN: 5975-01-556-7957)
Grounded Composite Junction Box
15 Ft. Submersion

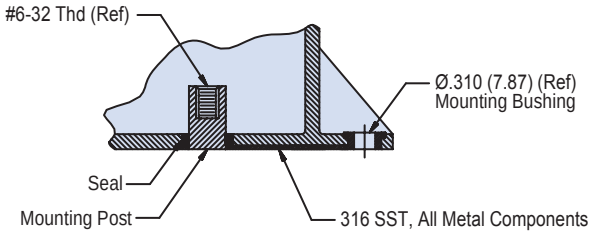

SECTION D-D
Electrical Ground Through Internal Mounting Post To External Mounting Bushing

TABLE I: Finish

Symbol	Description
XMS	Internal Surfaces - Electroless Nickel Exterior Surfaces - Unplated Light Grey Color
XO	No Plating

TABLE II: Replacement Parts

Item	Part Number	Description	Material
1	140-065XMS-01	Cover Assembly	Grey Thermoplastic
2	687-499-2	Cover Screw Assembly	316 SST/Passivate
3	687-305Z129	Mounting Plate Assembly	300 SST/Passivate

TABLE III: Mounting Plate Assembly

Dash No.	2.000" Mntg Holes	2.880" Mntg Holes	MIL-T-55164 A-A-59125	Number of Terminals	Max No of Wires	Recm'd Max Wire Size	Recm'd Lug MS17143	Qnty Blocks per Assembly	Symbol Number	Military Specification
01T1	6TB06	-	/12	6	24	#14 AWG	-5	1	-	-
01T2	25TB05	-	/23	5	10	#14 AWG	-17	1	-	-
01T3	-	4TB085	/10	8	32	#12 AWG	-3	1	435.1	MIL-T-24588/2
01T4	-	6TB10	/12	10	30	#14 AWG	-5	1	528	MIL-T-24588/3
01T5	-	15TB10	/19	10	40	#14 AWG	-8	1	-	-
01T6	-	16TB04	/20	4	08	#12 AWG	-3	1	444	MIL-T-24588/18

© 2013 Glenair, Inc. CAGE Code 06324 Printed in U.S.A.

140-060XMS-02
(NSN: 5975-01-557-2672)
Grounded Composite Junction Box
15 Ft. Submersion

Basic Part Number	Finish *(See Table I)*	Basic Box Number		Dash Number *See Table II*
140-060	XMS	02	-	T1

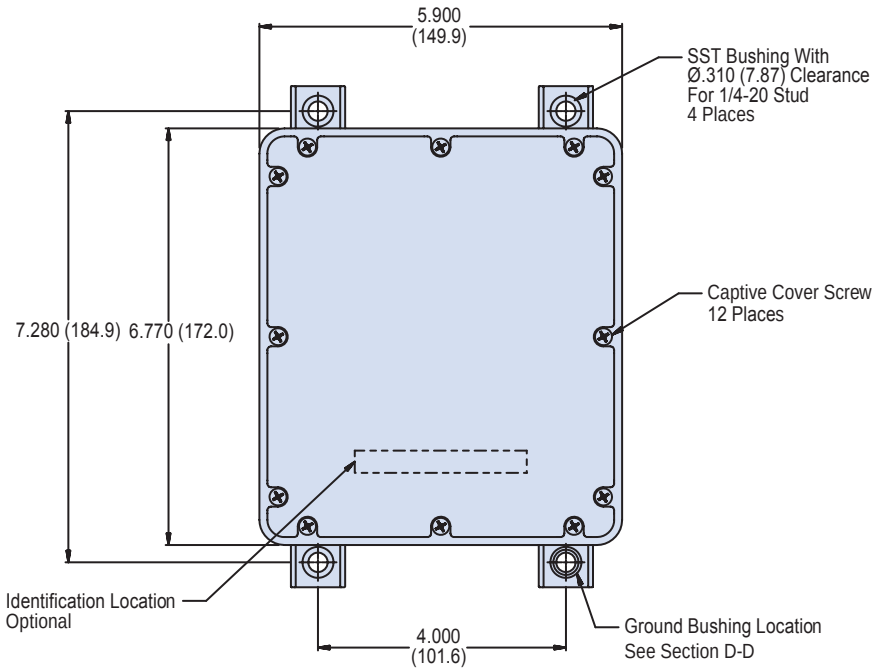

FIGURE 1 TOP VIEW

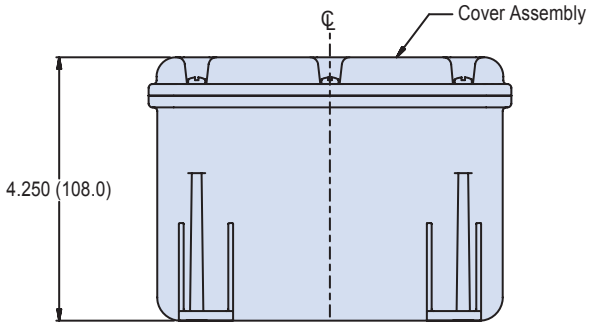

© 2013 Glenair, Inc.

GLENAIR, INC. • 1211 AIR WAY • GLENDALE, CA 91201-2497 • 818-247-6000 • FAX 818-500-9912
www.glenair.com
E-Mail: sales@glenair.com

140-060XMS-02
(NSN: 5975-01-557-2672)
Grounded Composite Junction Box
15 Ft. Submersion

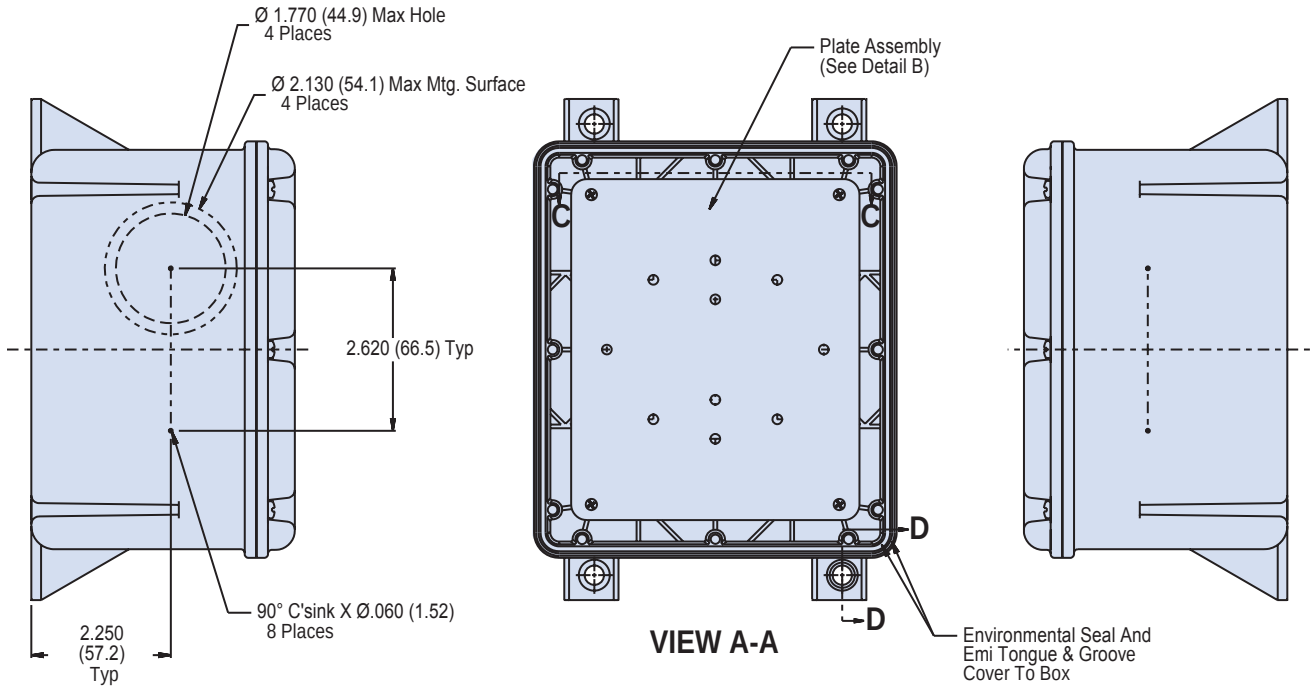

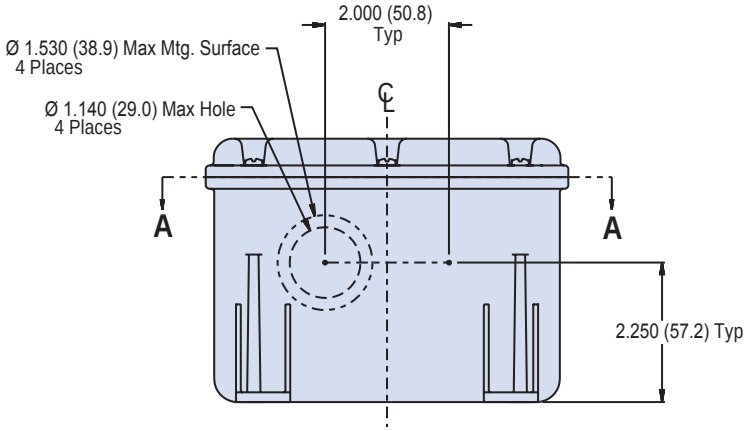

FIGURE 2

© 2013 Glenair, Inc. CAGE Code 06324 Printed in U.S.A.

140-060XMS-02
(NSN: 5975-01-557-2672)
Grounded Composite Junction Box
15 Ft. Submersion

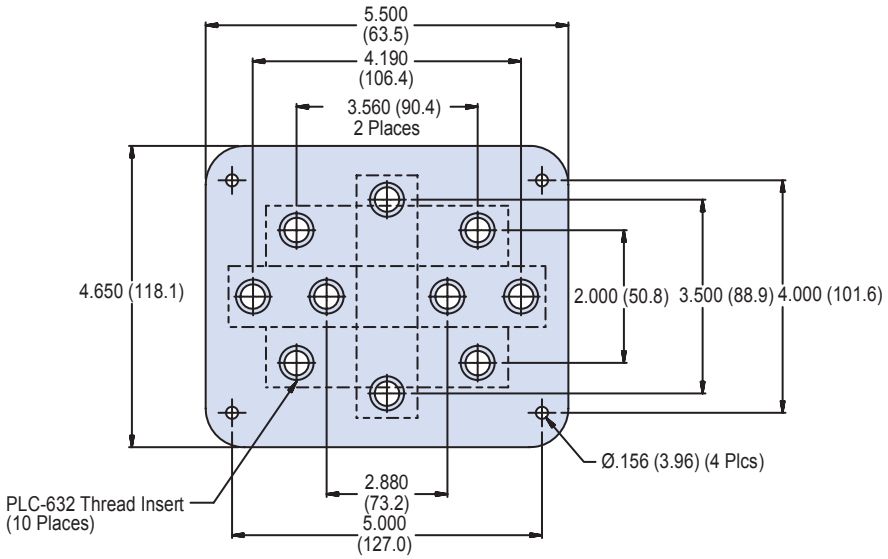

DETAIL B

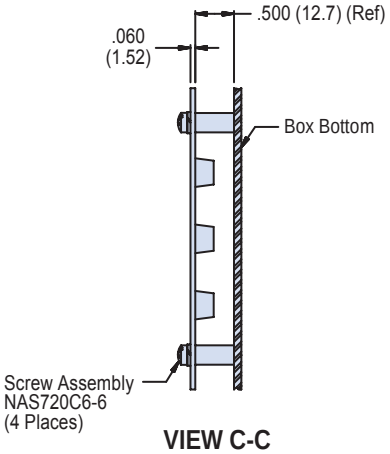

VIEW C-C

APPLICATION NOTES

1. Assembly identified with manufacurer's code identification number (Glenair, part number and date code).
2. Color may be subject to fading, however UV exposure will not affect material physical properties.
3. Assembly is similar to symbol part numbers and require installation in accordance with NAVSEA drawing 803-6983506.
4. Material / Finish:
   Box, cover - Thermoplastic grey color/see Table I.
   Hardware - 316 SST/passivate.
   Seals and gaskets - Silicone/N.A.
   Mounting Plate - 300 series SST/passivate.
5. Metric dimensions (mm) are indicated in parentheses.

© 2013 Glenair, Inc. CAGE Code 06324 Printed in U.S.A.

140-060XMS-02
(NSN: 5975-01-557-2672)
Grounded Composite Junction Box
15 Ft. Submersion

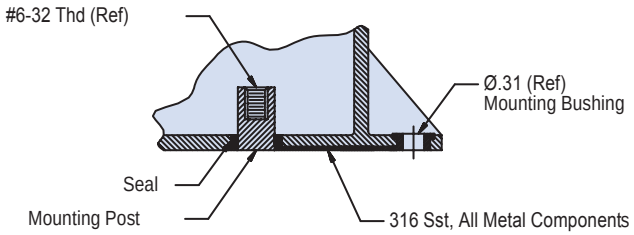

SECTION D-D

Electrical Ground Through Internal Mounting Post To External Mounting Bushing

TABLE I: Finish

Symbol	Description
XMS	Internal Surfaces - Electroless Nickel Exterior Surfaces - Unplated Light Grey Color
XO	No Plating

TABLE II: Replacement Parts

Item	Part Number	Description	Material
1	140-065XMS-17	Cover Assembly	Grey Thermoplastic
2	687-499-2	Cover Screw Assembly	316 SST/Passivate
3	687-305Z130	Mounting Plate Assembly	300 SST/Passivate

TABLE II: Mounting Plate Assembly

Dash No.	2.000″ Mntg Holes	2.880″ Mntg Holes	3.500″ Mntg Holes	3.560″ Mntg Holes	4.190″ Mntg Holes	MIL-T-55164 A-A-59125	Number of Terminals	Max No of Wires	Recm'd Max Wire Size	Recm'd Lug MS17143	Qnty Blocks per Assembly
02T1	6TB60	-	-	-	-	/12	6	40	#14 AWG	-5	2
02T2	25TB05	-	-	-	-	/23	5	20	#14 AWG	-17	2
02T3	-	4TB08	-	-	-	/10	8	32	#12 AWG	-3	1
02T4	-	5TB0	-	-	-	/12	10	30	#14 AWG	-5	1
02T5	-	15TB0	-	-	-	/19	10	40	#14 AWG	-8	1
02T6	-	16TB04	-	-	-	/20	8 W/ STUD 16 W/OW/O	8	#12 AWG	-3	1
02T7	-	-	8TB08	-	-	/14	10	32	#14 AWG	-11	1
02T8	-	-	-	25TB10	-	/23	10 W/ STUD 20 W/OW/O	40	#14 AWG	-17	2
02T9	-	-	-	26TB10	-	/24	12	80	#16 AWG	-20	2
03210	-	-	-	-	25TB12	/23	12W/ STUD 20 W/O	24	#14 AWG	-17	1
03T11	-	-	-	-	26TB12	/24		48	#16 AWG	-20	1

© 2013 Glenair, Inc. CAGE Code 06324 Printed in U.S.A.

140-060XMS-03
(NSN: 5975-01-557-2679)
Grounded Composite Junction Box
15 Ft. Submersion

Basic Part Number	Finish *(See Table I)*	Basic Box Number	
140-060	XMS	- 03	T1

Optional Configuration
See Table III for Required MIL-T-55164 Terminal Block
Omit if Not Required

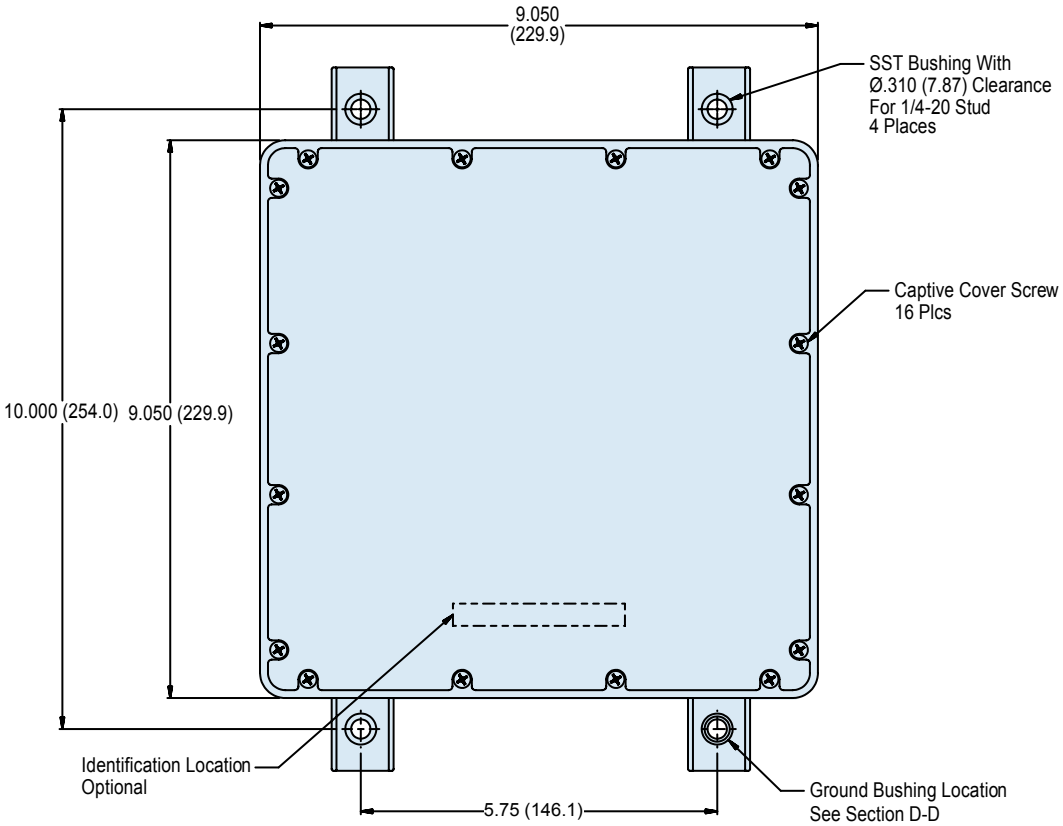

FIGURE 1 TOP VIEW

© 2013 Glenair, Inc. CAGE Code 06324 Printed in U.S.A.

140-060XMS-03
(NSN: 5975-01-557-2679)
Grounded Composite Junction Box
15 Ft. Submersion

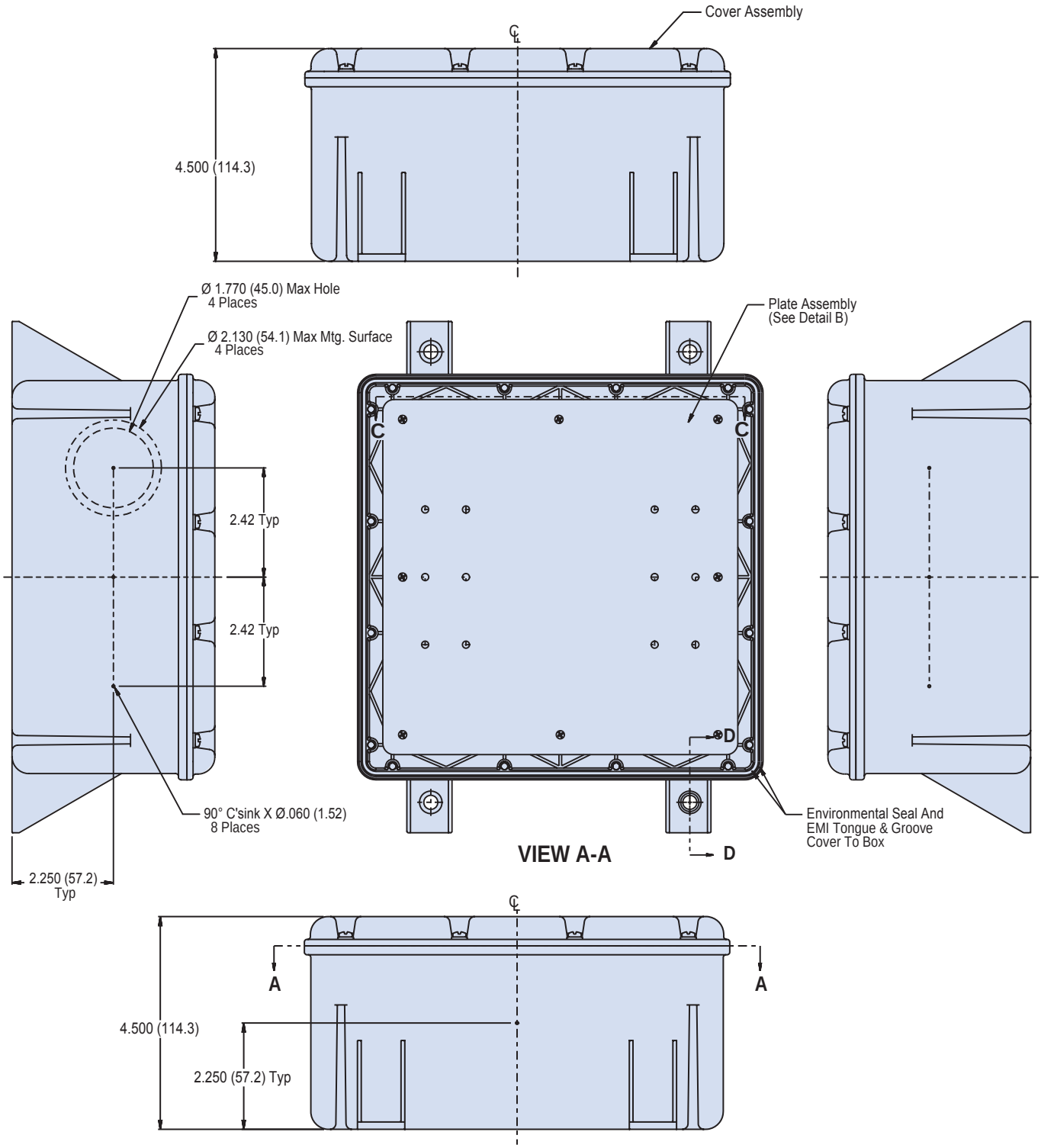

FIGURE 2

© 2013 Glenair, Inc.
CAGE Code 06324
Printed in U.S.A.

140-060XMS-03
(NSN: 5975-01-557-2679)
Grounded Composite Junction Box
15 Ft. Submersion

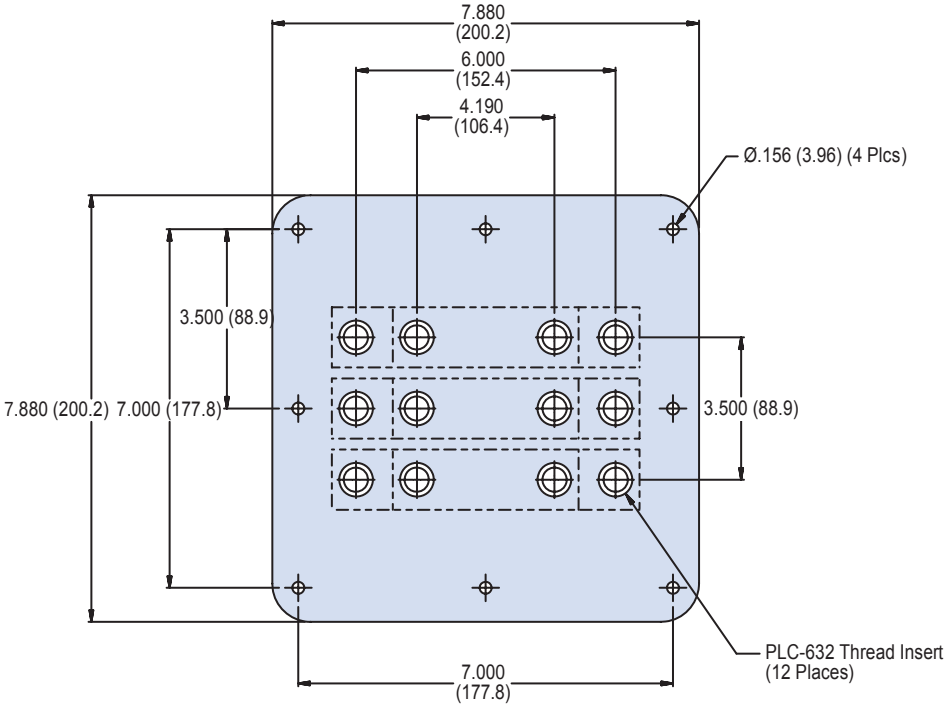

DETAIL B

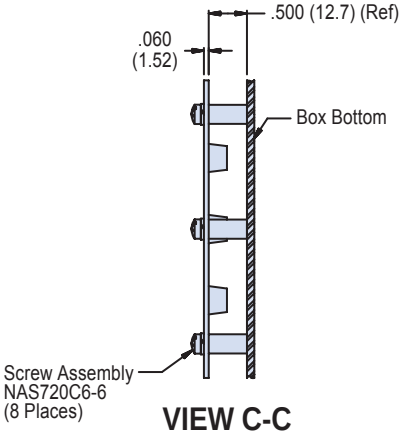

VIEW C-C

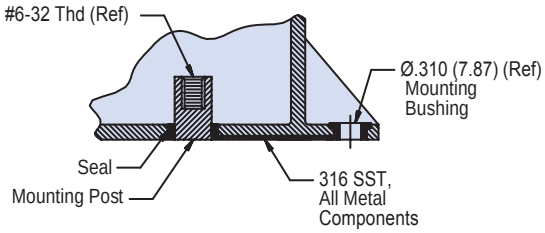

SECTION D-D

Electrical Ground Through Internal Mounting Post To External Mounting Bushing

APPLICATION NOTES

1. Assembly identified with manufacurer's code identification number (Glenair, part number and date code).
2. Color may be subject to fading, however UV exposure will not affect material physical properties.
3. Assembly is similar to symbol part numbers and require installation in accordance with NAVSEA drawing 803-6983506.
4. Material / Finish:
   Box, cover - Thermoplastic grey color/see Table I.
   Hardware - 316 SST/passivate.
   Seals and gaskets - Silicone/N.A.
   Mounting Plate - 300 series SST/passivate.
5. Metric dimensions (mm) are indicated in parentheses.

© 2013 Glenair, Inc. CAGE Code 06324 Printed in U.S.A.

140-060XMS-03
(NSN: 5975-01-557-2679)
Grounded Composite Junction Box
15 Ft. Submersion

Glenair®

TABLE I: Finish	
Symbol	**Description**
XMS	Internal Surfaces - Electroless Nickel Exterior Surfaces - Unplated Light Grey Color
XO	No Plating

TABLE II: Replacement Parts			
Item	**Part Number**	**Description**	**Material**
1	140-065XMS-15	Cover Assembly	Grey Thermoplastic
2	687-499-2	Cover Screw Assembly	316 SST/Passivate
3	687-305Z131	Mounting Plate Assembly	300 SST/Passivate

TABLE III: MIL-T-55164 Terminal Block	
Part Number	**National Stock Number**
140-060XMS-03	5935-01-557-2679
140-060XMS-03T1	5940-01-556-9489
140-060XMS-03T2	5940-01-557-2564
140-060XMS-03T5	5940-01-5576-2578
140-060XMS-03T9	5940-01-557-2582
140-060XMS-03T10	5940-01-556-9494
140-060XMS-03T11	5940-01-557-2563
140-060XMS-03T12	5940-01-556-9499

TABLE IV: Mounting Plate Assembly

Dash No.	6.000″ Mntg Holes	4.190″ Mntg Holes	MIL-T-55164 A-A-59125	Number of Terminals	Max No of Wires	Recm'd Max Wire Size	Recm'd Lug MS17143	Qnty Blocks per Assembly	Symbol Number	Military Specification
03T1	4TB20	-	/10	20	80	#12 AWG	-3	1	432.1	MIL-T-24558/4
03T2	6TB06F/24	-	/12	30	90	#14 AWG	-5	2	434	MIL-T-24558/5
03T3	10TB28	-	/16	56	168	#14 AWG	-	2	-	-
03T4	15TB24	-	/19	48	144	#14 AWG	-8	2	-	-
03T5	16TB10	-	/20	10	20	#12 AWG	-3	1	529	MIL-T-24588/20
03T6	17TB10	-	/21	10W/STUD 20 W/O	80	#12 AWG	-3	2	-	-
03T7	-	25TB12	/23	36	72	#14 AWG	-17	3	-	-
03T8	-	26TB12	/24	24W/STUD 48 W/O	96	#16 AWG	-20	2	-	-
03T9	4TB20	-	/10	40	160	#12 AWG	-3	2	433.1	MIL-T-24588/6
03T10	6TB24	-	/12	48	144	#14 AWG	-5	2	522.1	MIL-T-24588/7
03T11	4TB20T	-	/10	60	240	#12 AWG	-3	3	446	MIL-T-24588/8
03T12	6TB24	-	/12	72	216	#14 AWG	-5	3	525	MIL-T-24588/9

© 2013 Glenair, Inc. CAGE Code 06324 Printed in U.S.A.

140-060XMS-05
(NSN: 5975-01-556-7948)
Grounded Composite Junction Box
15 Ft. Submersion • Size 4.3 x 4.8 x 2.9

Basic Part Number	Finish (See Table I)	Basic Box Number		Dash Number See Table IV
140-060	XMS	- 05	-	T1

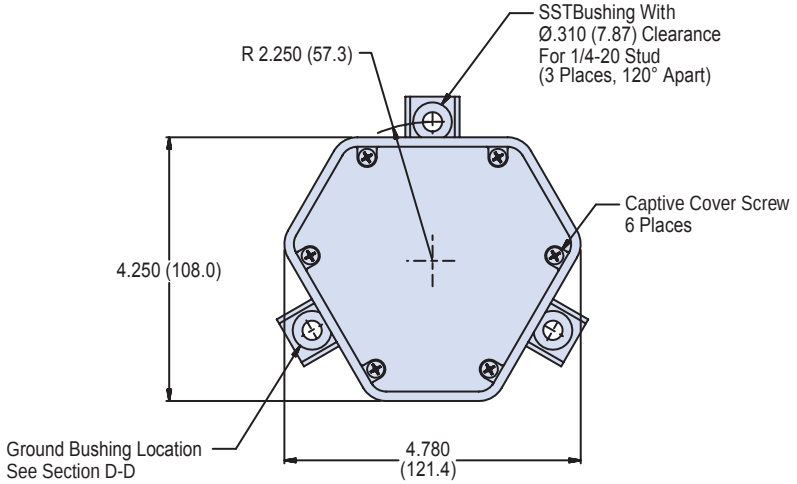

FIGURE 1 TOP VIEW

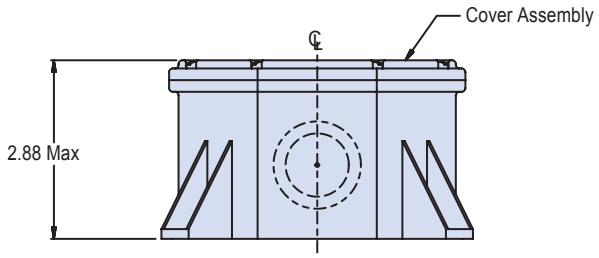

© 2013 Glenair, Inc. CAGE Code 06324 Printed in U.S.A.

140-060XMS-05
(NSN: 5975-01-556-7948)
Grounded Composite Junction Box
15 Ft. Submersion • Size 4.3 x 4.8 x 2.9

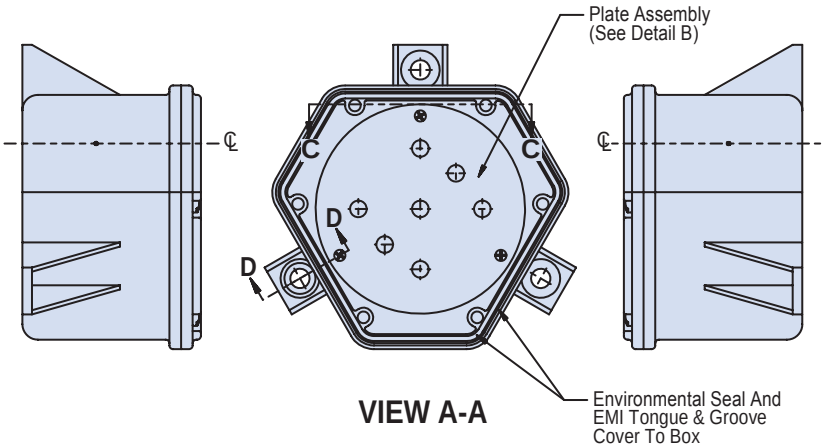

VIEW A-A

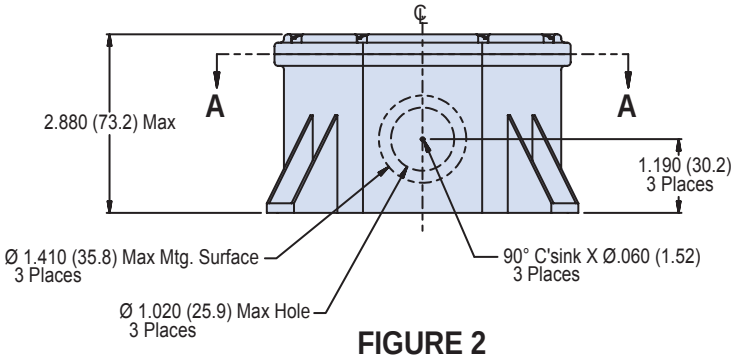

FIGURE 2

© 2013 Glenair, Inc. CAGE Code 06324 Printed in U.S.A.

140-060XMS-05
(NSN: 5975-01-556-7948)
Grounded Composite Junction Box
15 Ft. Submersion • Size 4.3 x 4.8 x 2.9

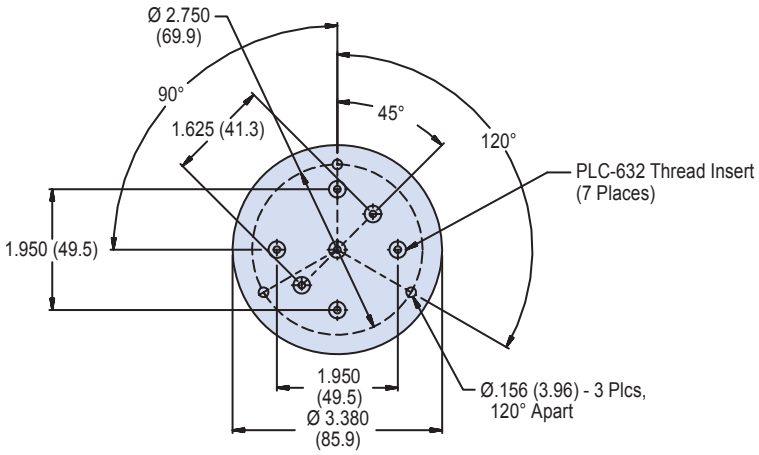

DETAIL B

Dash No.'s T1, T2 & T3

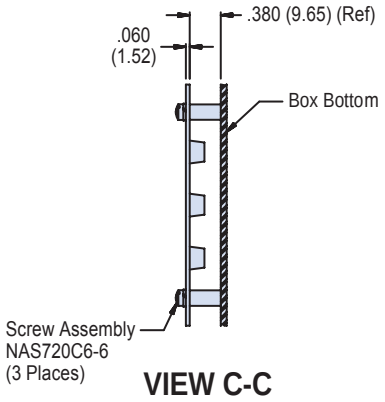

VIEW C-C

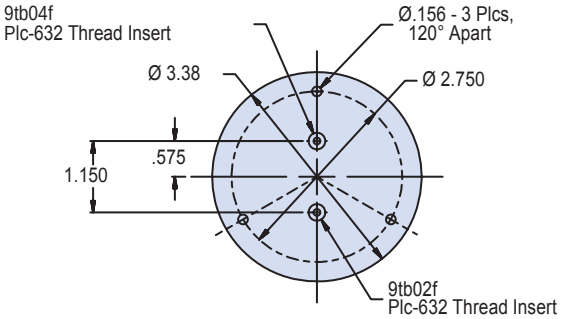

DETAIL B

Dash No. T4 Only

APPLICATION NOTES

1. Assembly identified with manufacurer's code identification number (Glenair, part number and date code).
2. Color may be subject to fading, however UV exposure will not affect material physical properties.
3. Assembly is similar to symbol part numbers and require installation in accordance with NAVSEA drawing 803-6983506.
4. Material / Finish:
   Box, cover - Thermoplastic grey color/see Table I.
   Hardware - 316 SST/passivate.
   Seals and gaskets - Silicone/N.A.
   Mounting Plate - 300 series SST/passivate.
5. Metric dimensions (mm) are indicated in parentheses.

© 2013 Glenair, Inc. CAGE Code 06324 Printed in U.S.A.

140-060XMS-05
(NSN: 5975-01-556-7948)
Grounded Composite Junction Box
15 Ft. Submersion • Size 4.3 x 4.8 x 2.9

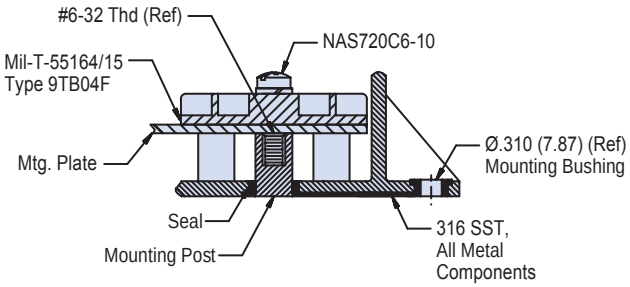

SECTION VIEW D-D

Terminal Block Mounting Plate, Internal Mounting Post And External Mounting Bushing (Ground Option Shown)

TABLE I: Finish

Symbol	Description
XMS	Internal Surfaces - Electroless Nickel Exterior Surfaces - Unplated Light Grey Color
XO	No Plating

TABLE II: MIL-T-55164 Terminal Block

Part Number	National Stock Number
140-060XMS-05	5975-01-556-7948
140-060XMS-05T1	5940-01-557-2579
140-060XMS-05T4	5940-01-557-2712

TABLE III: Replacement Parts

Item	Part Number	Description	Material
1	140-065XMS-14	Cover Assembly	Grey Thermoplastic
2	687-499-2	Cover Screw Assembly	316 SST/Passivate
3	687-305Z131	Mounting Plate Assembly	300 SST/Passivate

TABLE IV: Mounting Plate Assembly

Dash No.	1.950″ Mntg Holes	1.625″ Mntg Holes	MIL-T-55164 A-A-59125	Number of Terminals	Max No of Wires	Recm'd Max Wire Size	Recm'd Lug MS17143	Qnty Blocks per Assembly	Symbol Number	Military Specification
05T1	9TB04	-	/15	4	8	#12 AWG	-	1	-	-
05T2	6TB06	-	/12	6	18	#14 AWG	-5	1	520.1	MIL-T-24588/1
05T3	25TB05	-	/23	5	10	#14 AWG	-17	1	-	-
05T4	T4 Detail	-	/15	6	12	-	-	2	400	MIL-T-24588/18

© 2013 Glenair, Inc. CAGE Code 06324 Printed in U.S.A.

147-023XMS-02
(NSN: 5940-01-557-2667) (Symbol 1099.1)
SNR, 15 Amp, 115 V Blade Type Receptacle Composite Box
Grounded • Size 4.3 x 4.8 x 2.9

Basic Part Number	Finish (See Table I)	Basic Box Number	
140-023	XMS	- 02	T

Optional Configuration
Add "T" for MIL-T-55164/15 Terminal Block
Omit if Not Required

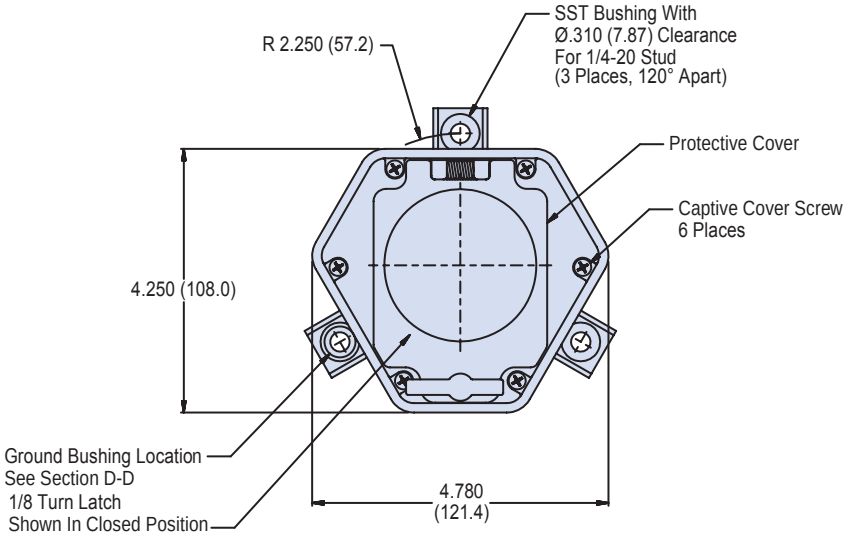

FIGURE 1 TOP VIEW

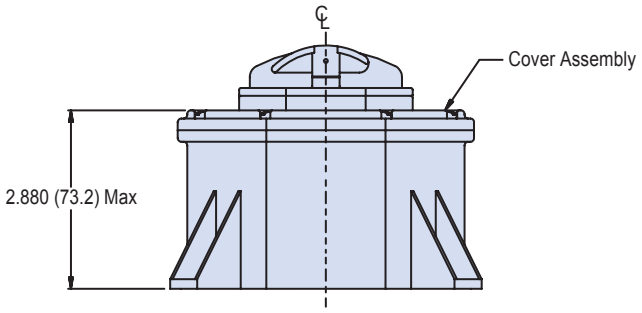

© 2013 Glenair, Inc. CAGE Code 06324 Printed in U.S.A.

147-023XMS-02
(NSN: 5940-01-557-2667) (Symbol 1099.1)
SNR, 15 Amp, 115 V Blade Type Receptacle Composite Box
Grounded • Size 4.3 x 4.8 x 2.9

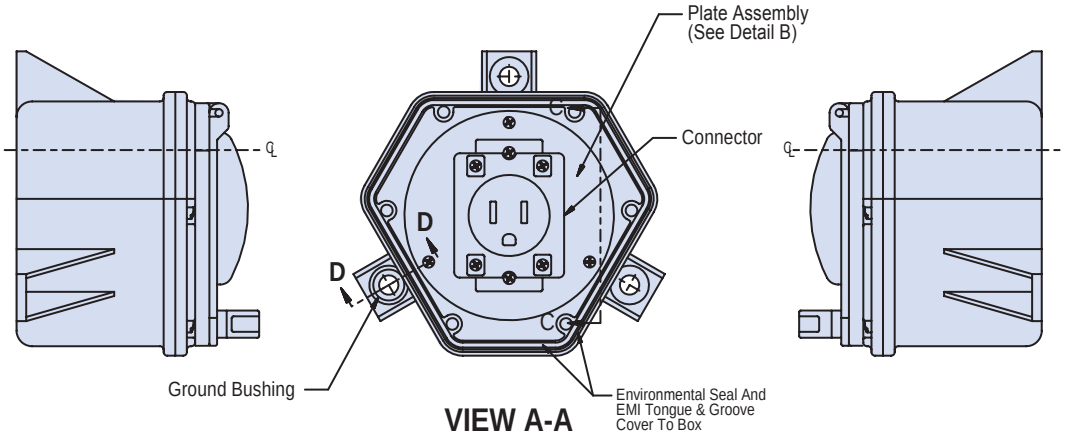

VIEW A-A

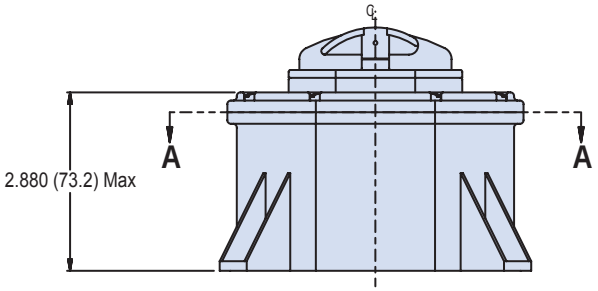

FIGURE 2

© 2013 Glenair, Inc. CAGE Code 06324 Printed in U.S.A.

147-023XMS-02
(NSN: 5940-01-557-2667) (Symbol 1099.1)
SNR, 15 Amp, 115 V Blade Type Receptacle Composite Box
Grounded • Size 4.3 x 4.8 x 2.9

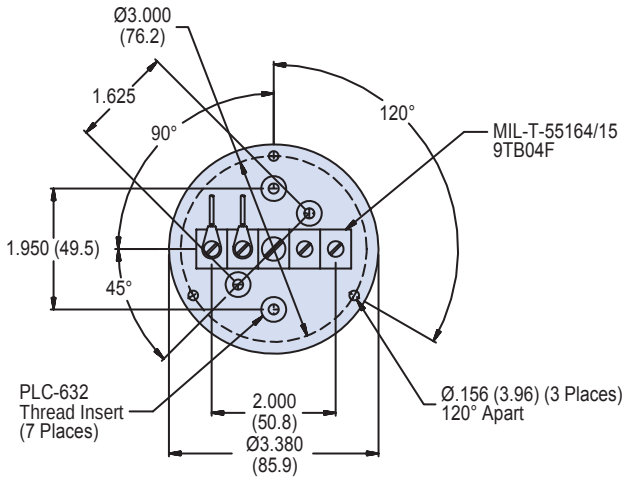

DETAIL B

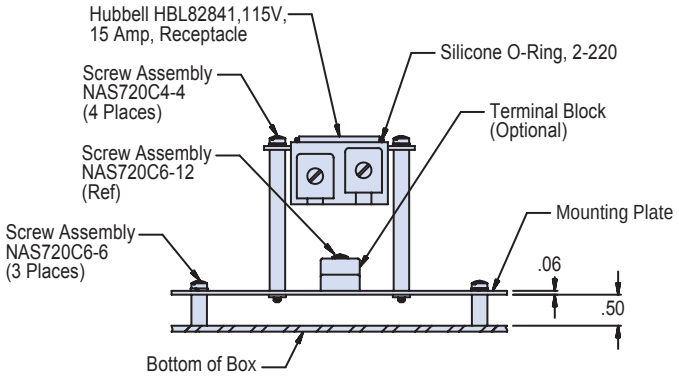

VIEW C-C

APPLICATION NOTES

1. Assembly identified with manufacurer's code identification number (Glenair, part number and date code).
2. Color may be subject to fading, however UV exposure will not affect material physical properties.
3. Assembly is similar to symbol part numbers and require installation in accordance with NAVSEA drawing 803-6983506.
4. Material / Finish:
   Box, cover - Thermoplastic grey color/see Table I.
   Hardware - 316 SST/passivate.
   Seals and gaskets - Silicone/N.A.
   Mounting Plate - 300 series SST/passivate.
5. Metric dimensions (mm) are indicated in parentheses.

© 2013 Glenair, Inc. CAGE Code 06324 Printed in U.S.A.

147-023XMS-02
(NSN: 5940-01-557-2667) (Symbol 1099.1)
SNR, 15 Amp, 115 V Blade Type Receptacle Composite Box
Grounded • Size 4.3 x 4.8 x 2.9

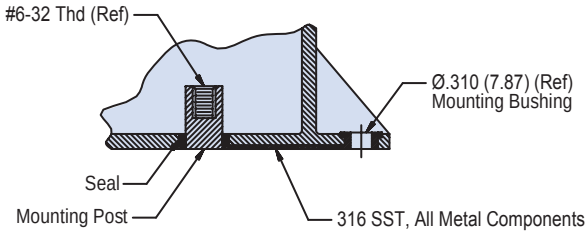

SECTION D-D

Electrical Ground Through Internal Mounting Post To External Mounting Bushing

TABLE I: Finish

Symbol	Description
XMS	Internal Surfaces - Electroless Nickel Exterior Surfaces - Unplated Light Grey Color
XO	No Plating

TABLE II: Replacement Parts

Item	Part Number	Description	Material
1	140-065XMS-18	Cover Assembly	Grey Thermoplastic
2	687-499-2	Cover Screw Assembly	316 SST/Passivate
3	687-305Z132	Mounting Plate Assembly	300 Series SST
4	630-038XO-04K	1/8 Turn Flop Lid	Grey Thermoplastic
5	HBL8284I	Electrical Connector	N/A

© 2013 Glenair, Inc. CAGE Code 06324 Printed in U.S.A.

147-023XMS-01
(NSN: 5940-01-557-2645)
15 Amp, 115 V Blade Type Receptacle Composite Box
Grounded • Size 4.3 x 4.8 x 2.9

Basic Part Number	Finish *(See Table I)*		Basic Box Number	
140-023	XMS	-	01	T

Optional Configuration
Add "T" for MIL-T-55164/15 Terminal Block
Omit if Not Required

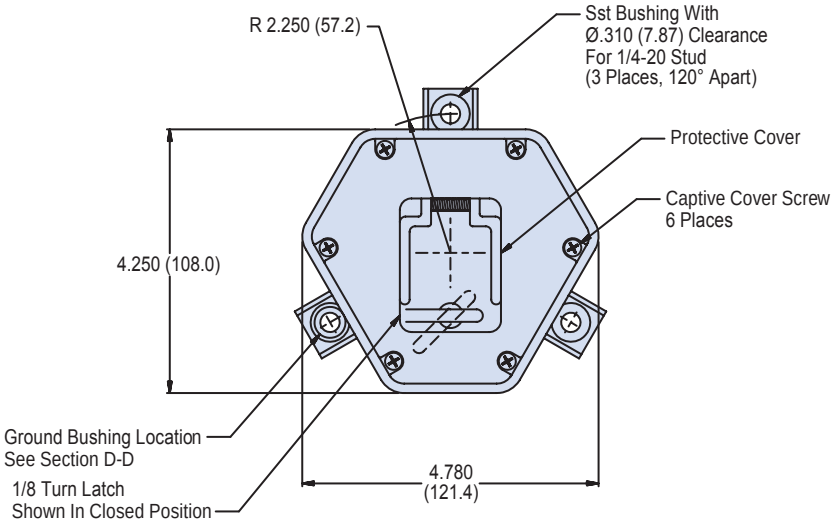

FIGURE 1 TOP VIEW

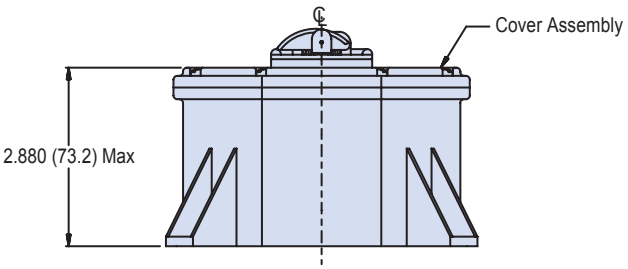

© 2013 Glenair, Inc. CAGE Code 06324 Printed in U.S.A.

147-023XMS-01
(NSN: 5940-01-557-2645)
15 Amp, 115 V Blade Type Receptacle Composite Box
Grounded • Size 4.3 x 4.8 x 2.9

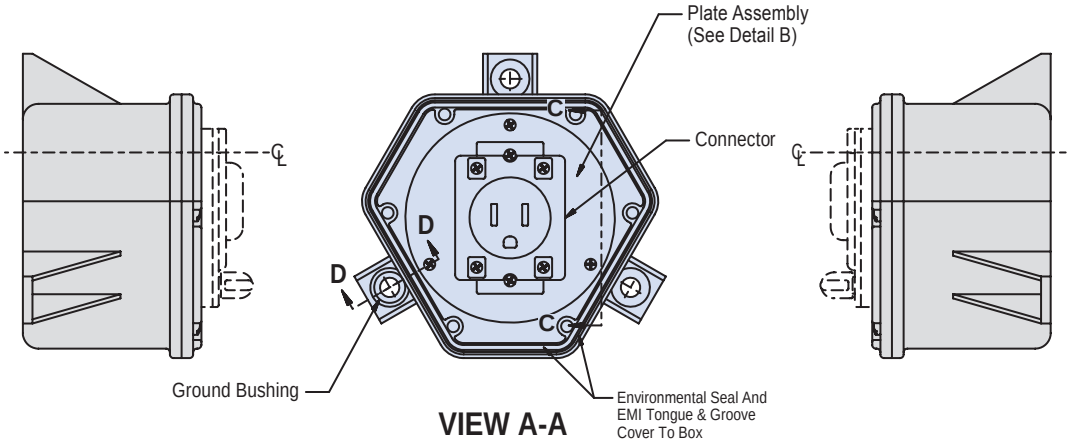

VIEW A-A

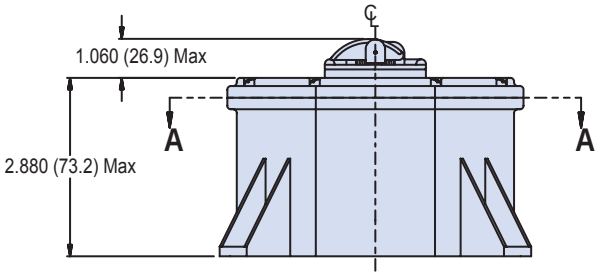

FIGURE 2

© 2013 Glenair, Inc.

GLENAIR, INC. • 1211 AIR WAY • GLENDALE, CA 91201-2497 • 818-247-6000 • FAX 818-500-9912
www.glenair.com
E-Mail: sales@glenair.com

147-023XMS-01
(NSN: 5940-01-557-2645)
15 Amp, 115 V Blade Type Receptacle Composite Box
Grounded • Size 4.3 x 4.8 x 2.9

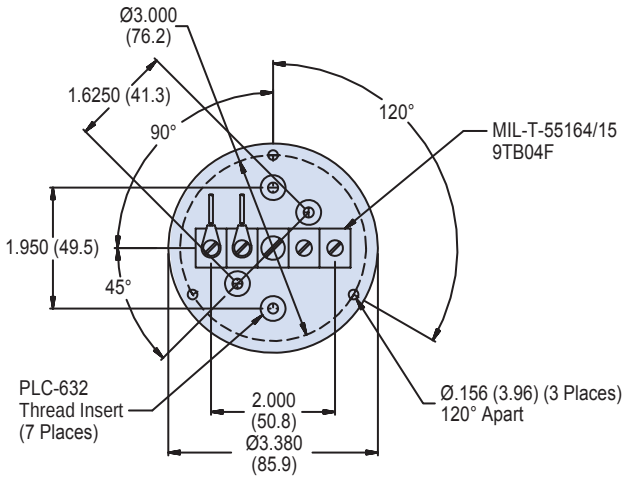

DETAIL B

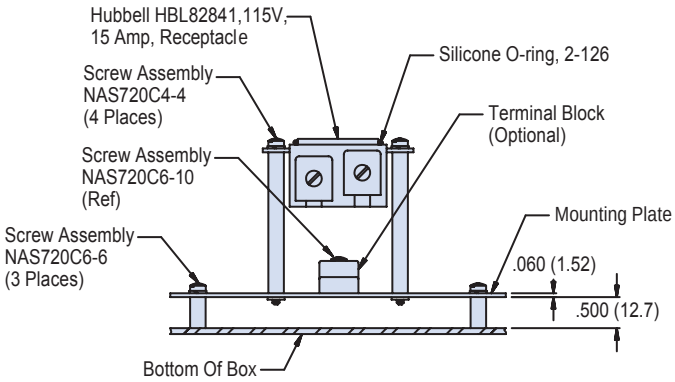

VIEW C-C

APPLICATION NOTES

1. Assembly identified with manufacurer's code identification number (Glenair, part number and date code).
2. Color may be subject to fading, however UV exposure will not affect material physical properties.
3. Assembly is similar to symbol part numbers and require installation in accordance with NAVSEA drawing 803-6983506.
4. Material / Finish:
   Box, cover - Thermoplastic grey color/see Table I.
   Hardware - 316 SST/passivate.
   Seals and gaskets - Silicone/N.A.
   Mounting Plate - 300 series SST/passivate.
5. Metric dimensions (mm) are indicated in parentheses.
6. Not for use with thread collar receptacle, see 147-023XMS-02.

© 2013 Glenair, Inc. CAGE Code 06324 Printed in U.S.A.

147-023XMS-01
(NSN: 5940-01-557-2645)
15 Amp, 115 V Blade Type Receptacle Composite Box
Grounded • Size 4.3 x 4.8 x 2.9

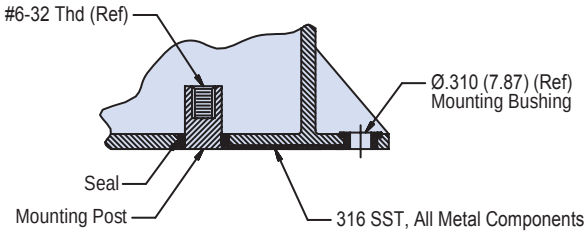

SECTION D-D

Electrical Ground Through Internal Mounting Post To External Mounting Bushing

TABLE I: Finish

Symbol	Description
XMS	Internal Surfaces - Electroless Nickel Exterior Surfaces - Unplated Light Grey Color
XO	No Plating

TABLE II: Replacement Parts

Item	Part Number	Description	Material
1	140-065XMS-13	Cover Assembly	Grey Thermoplastic
2	687-499-2	Cover Screw Assembly	316 SST/Passivate
3	687-305Z132	Mounting Plate Assembly	300 Series SST
4	630-038XO-04K	1/8 Turn Flop Lid	Grey Thermoplastic
5	HBL8284I	Electrical Connector	N/A

© 2013 Glenair, Inc. CAGE Code 06324 Printed in U.S.A.

147-032XMS-0005G
(NSN: 5940-01-557-2719) (Symbol 101)
125 AMP Blade Type Receptacle Composite Electrical Box Grounded

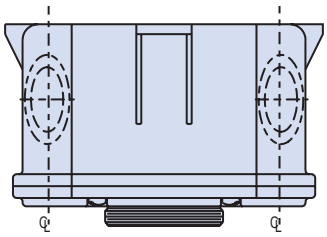

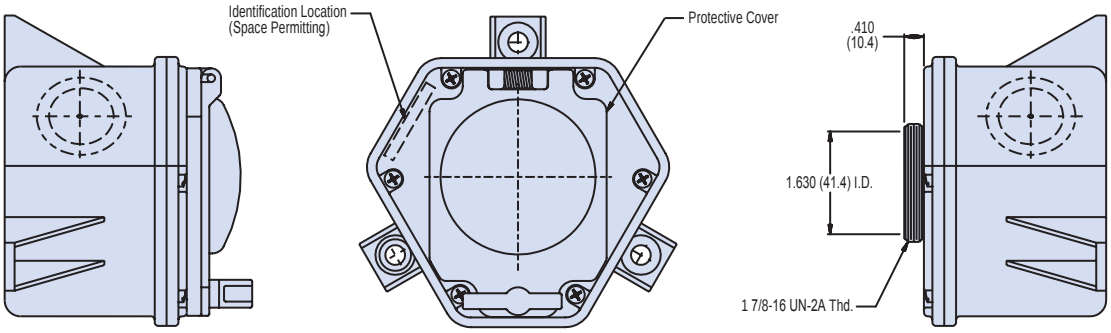

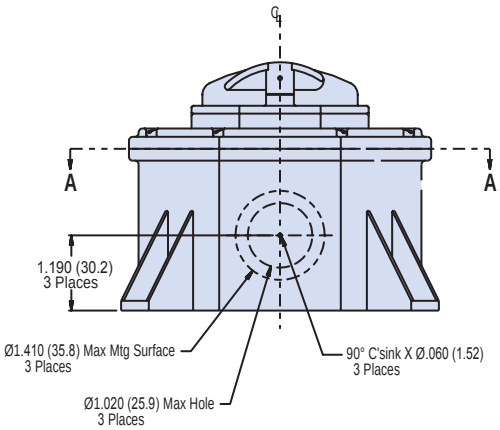

© 2013 Glenair, Inc. CAGE Code 06324 Printed in U.S.A.

147-032XMS-0005G
(NSN: 5940-01-557-2719) (Symbol 101)
125 AMP Blade Type Receptacle Composite Electrical Box Grounded

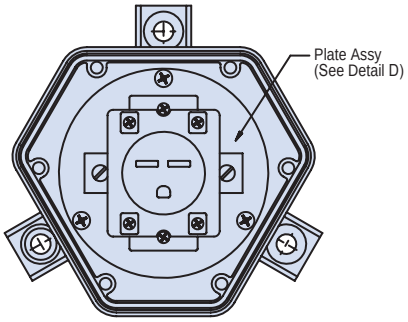

VIEW A-A

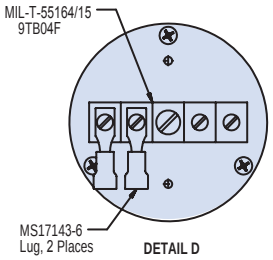

DETAIL D

TABLE I: Finish	
Symbol	**Description**
XMS	Internal Surfaces - Electroless Nickel Exterior Surfaces - Unplated Light Grey Color
XO	No Plating

APPLICATION NOTES

1. Assembly identified with manufacurer's code identification number (Glenair, part number and date code).
2. Accommodates one each, 115V or 125V, 15 Amp electrical connector receptacle (See Detail B).
3. Material / Finish:
   Box, cover - Thermoplastic grey color/see Table I.
   Hardware - 316 SST/passivate.
   Seals and gaskets - Silicone/N.A.
   Mounting Plate - Al alloy/electroless nickel or 300 series SST/passivate.
4. Metric dimensions (mm) are indicated in parentheses.

© 2013 Glenair, Inc.

GLENAIR, INC. • 1211 AIR WAY • GLENDALE, CA 91201-2497 • 818-247-6000 • FAX 818-500-9912
www.glenair.com
E-Mail: sales@glenair.com

147-033XMS-0003
(NSN: 5940-01-557-2725)
EMI/Environmental Composite Electrical Box for MS3402 Receptacle Connector • Grounded

Basic Part Number	Finish *(See Table I)*	Dash Number	
147-033	XMS -	0003	C

C Option Supplied with Connector Assembly
See Specific Eng. Dwgs. Omit if Not Required

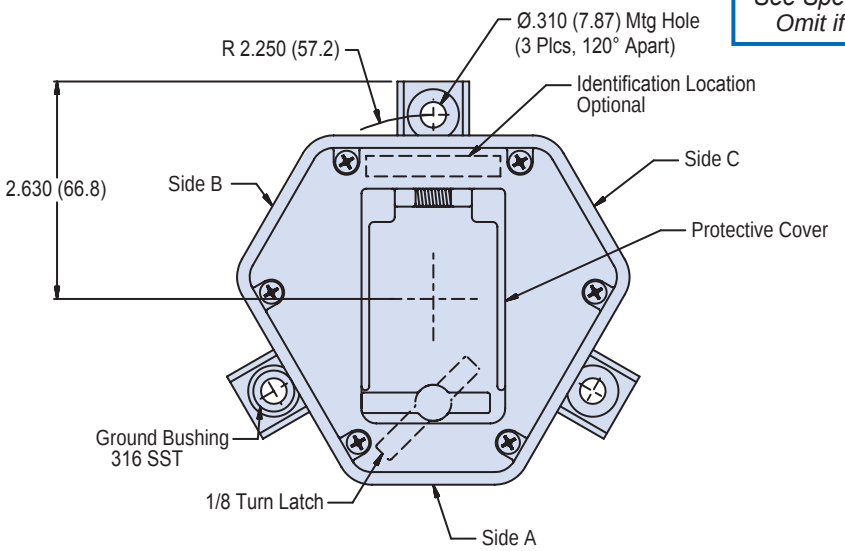

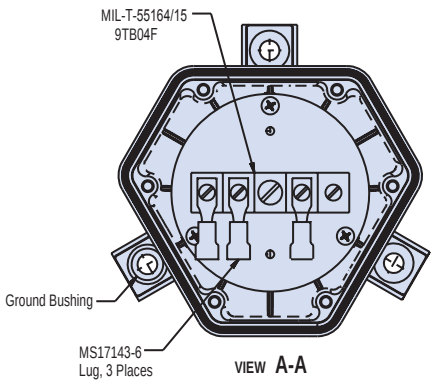

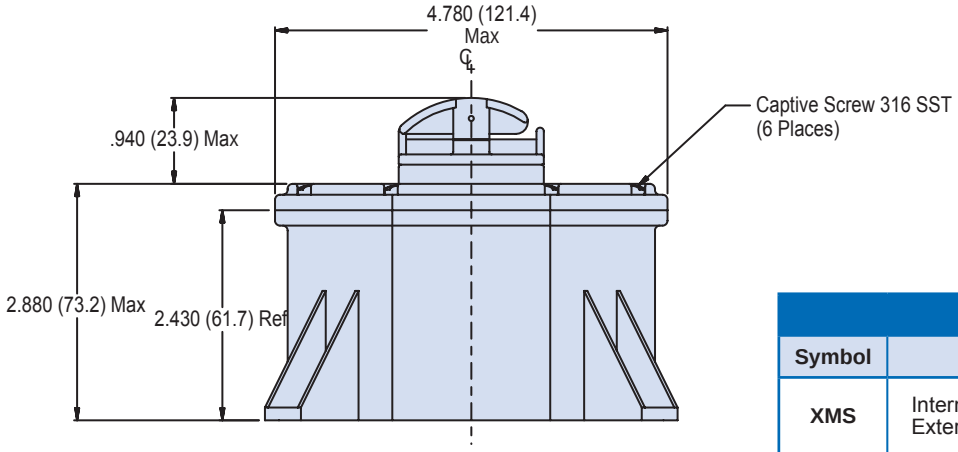

TABLE I: Finish

Symbol	Description
XMS	Internal Surfaces - Electroless Nickel Exterior Surfaces - Unplated Light Grey Color
XO	No Plating

© 2013 Glenair, Inc. CAGE Code 06324 Printed in U.S.A.

147-033XMS-0003
(NSN: 5940-01-557-2725)
EMI/Environmental Composite Electrical Box for MS3402 Receptacle Connector • Grounded

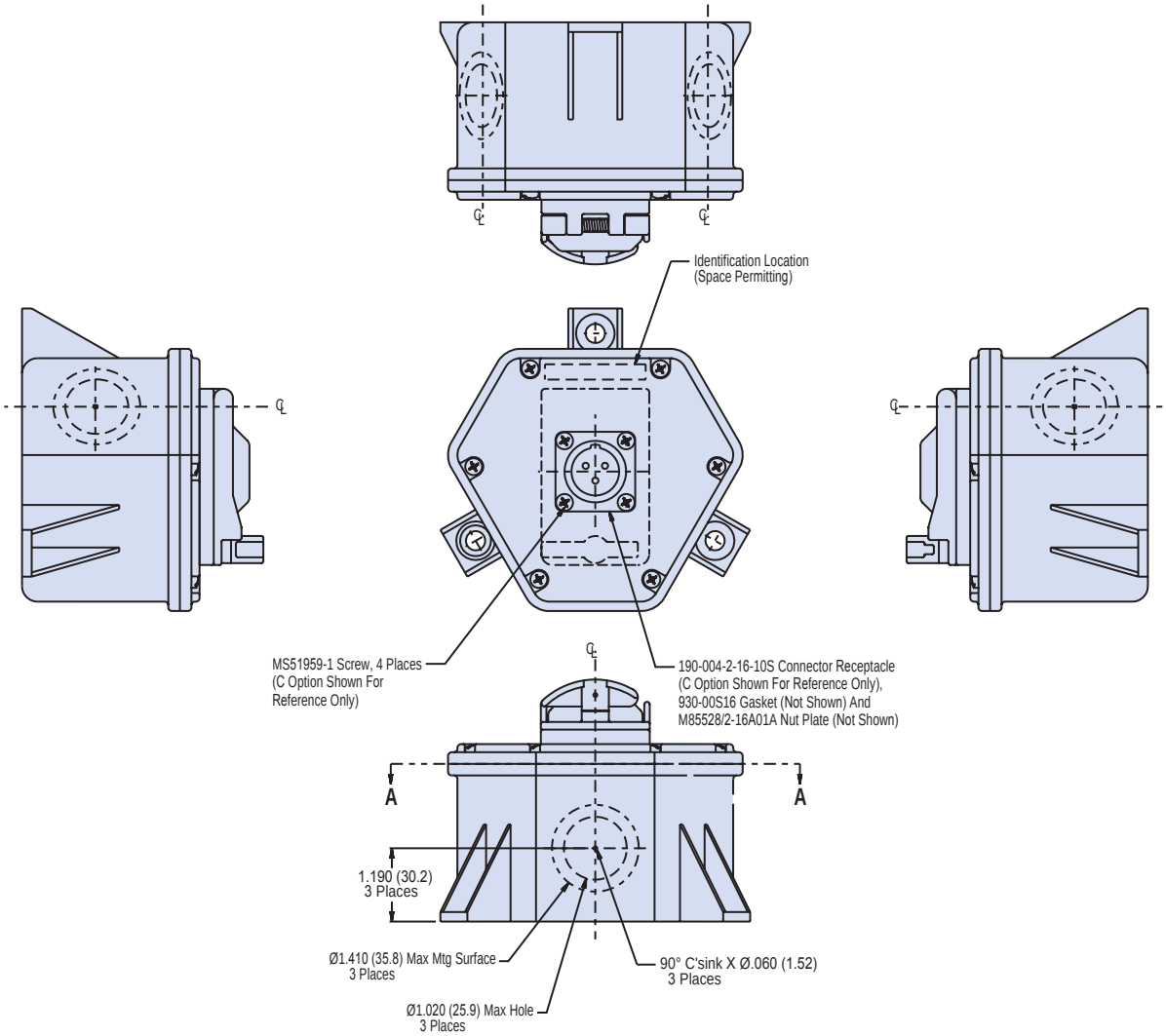

APPLICATION NOTES

1. Assembly identified with manufacurer's code identification number (Glenair, part number and date code).
2. Material / Finish:
   Box, cover - Thermoplastic grey color/see Table I.
   Hardware - 316 SST/passivate.
   Seals and gaskets - Silicone/N.A.
   Mounting Plate - 300 series SST/passivate.
3. Glenair recommended mating connector plug and backshell: 190-004-6-16-10P.
4. Metric dimensions (mm) are indicated in parentheses.

© 2013 Glenair, Inc. CAGE Code 06324 Printed in U.S.A.

147-020XMS-02
(NSN: 5975-01-556-9504)
Dual Electrical Blade Type Receptacle Composite Box
15 Amp, 125 Volt 60 Hz, Grounded • Size 6.0 x 5.2 x 3.4

Basic Part Number	Finish *(See Table I)*	Basic Box Number
147-020	XMS	02

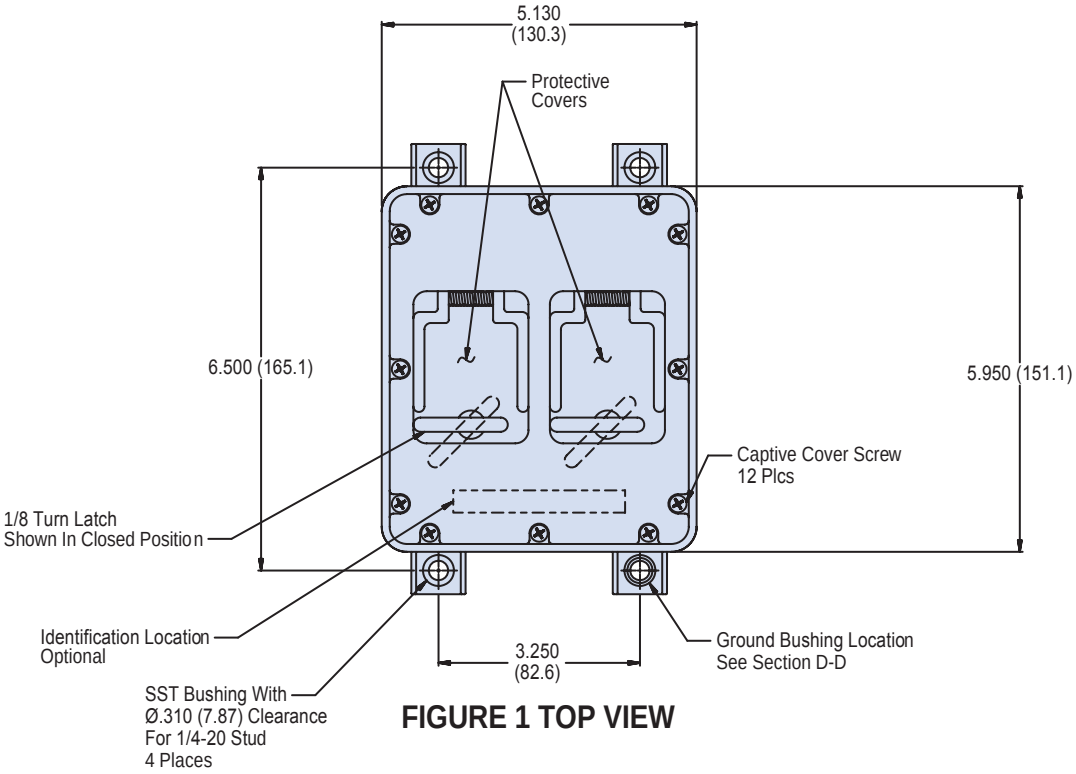

FIGURE 1 TOP VIEW

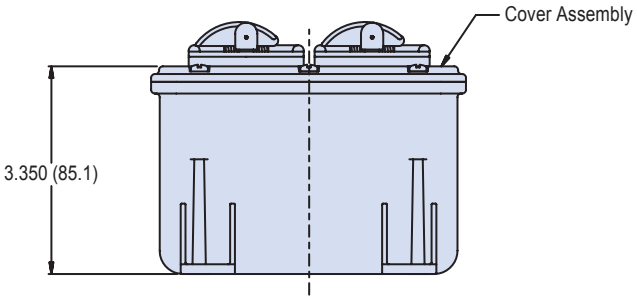

© 2013 Glenair, Inc. CAGE Code 06324 Printed in U.S.A.

147-020XMS-02
(NSN: 5975-01-556-9504)
Dual Electrical Blade Type Receptacle Composite Box
15 Amp, 125 Volt 60 Hz, Grounded • Size 6.0 x 5.2 x 3.4

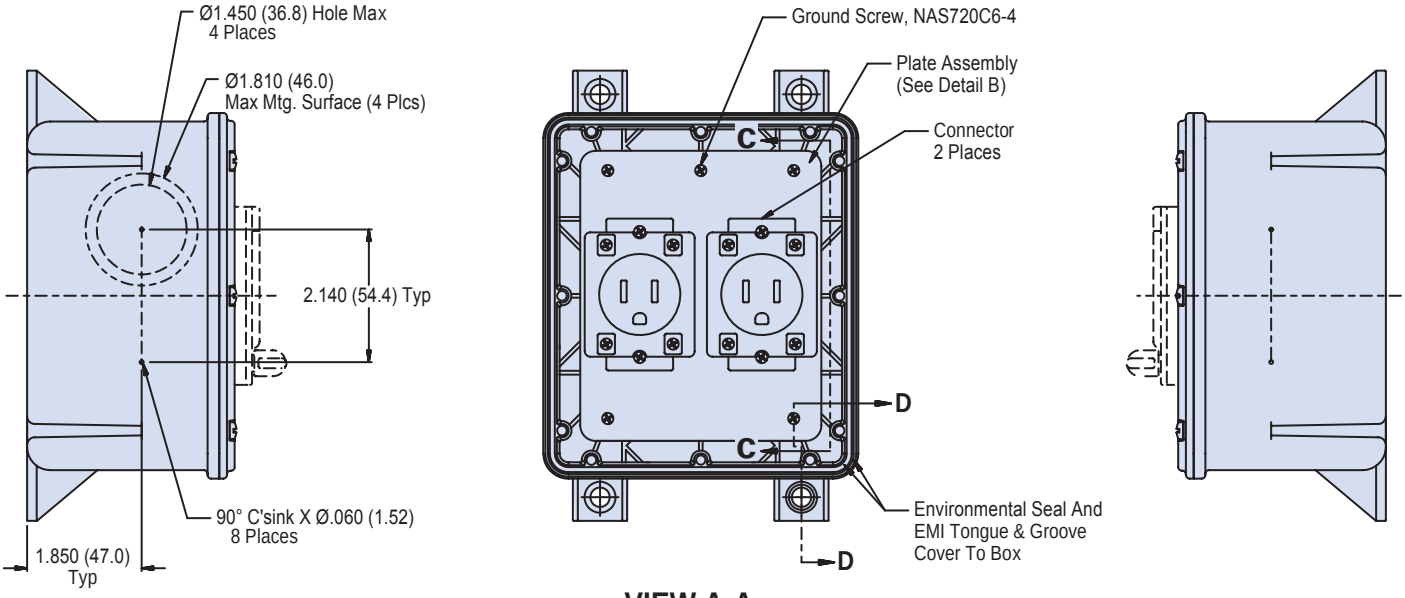

VIEW A-A

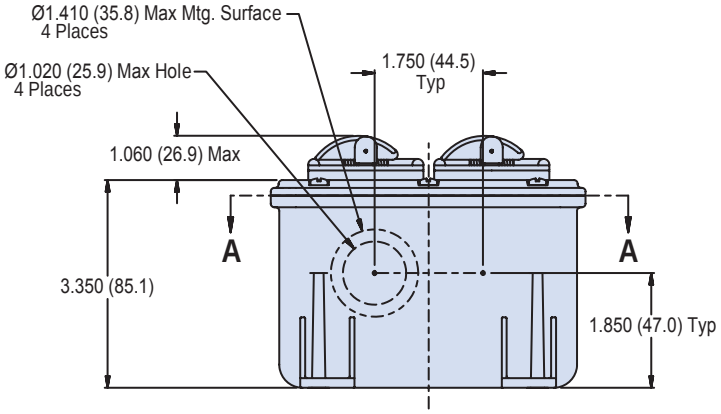

FIGURE 2

© 2013 Glenair, Inc. CAGE Code 06324 Printed in U.S.A.

147-020XMS-02
(NSN: 5975-01-556-9504)
Dual Electrical Blade Type Receptacle Composite Box
15 Amp, 125 Volt 60 Hz, Grounded • Size 6.0 x 5.2 x 3.4

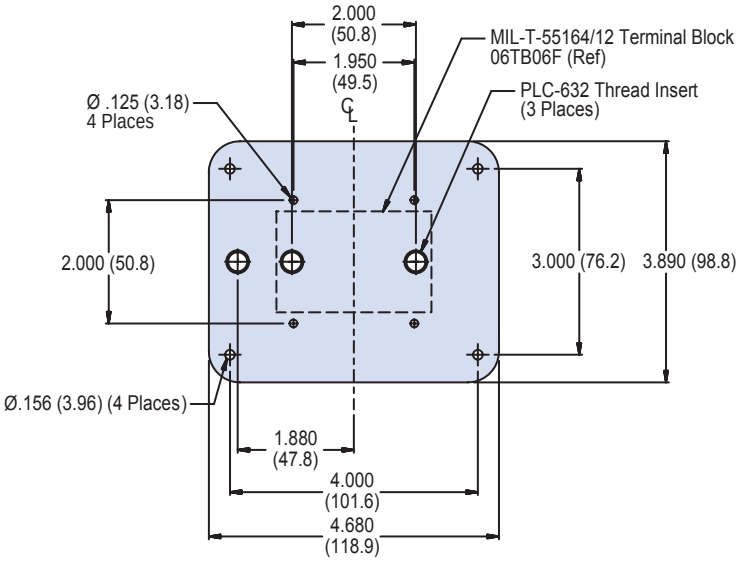

DETAIL B

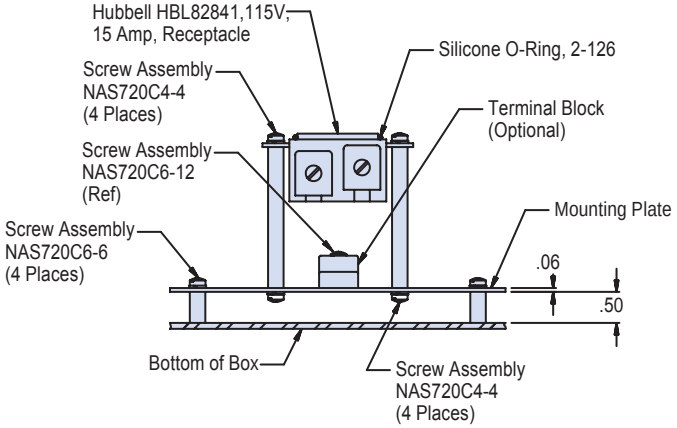

VIEW C-C

APPLICATION NOTES

1. Assembly identified with manufacurer's code identification number (Glenair, part number and date code).
1. Color may be subject to fading, however UV exposure will not affect material physical properties.
2. Assembly is similar to symbol part numbers and require installation in accordance with NAVSEA drawing 803-6983506.
3. Material / Finish:
   Box, cover - Thermoplastic grey color/see Table I.
   Hardware - 316 SST/passivate.
   Seals and gaskets - Silicone/N.A.
   Mounting Plate - 300 series SST/passivate.
4. Not for use with thread collar receptacle, see 147-020XMS-05.
5. Metric dimensions (mm) are indicated in parentheses.

© 2013 Glenair, Inc. CAGE Code 06324 Printed in U.S.A.

147-020XMS-02
(NSN: 5975-01-556-9504)
Dual Electrical Blade Type Receptacle Composite Box
15 Amp, 125 Volt 60 Hz, Grounded • Size 6.0 x 5.2 x 3.4

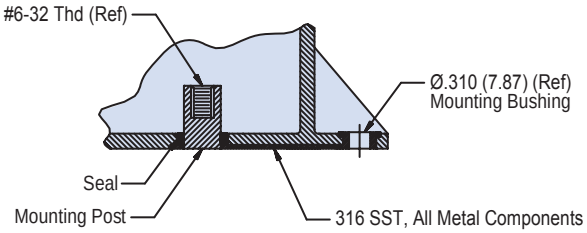

SECTION D-D

Electrical Ground Through Internal Mounting Post To External Mounting Bushing

TABLE I: Finish

Symbol	Description
XMS	Internal Surfaces - Electroless Nickel Exterior Surfaces - Unplated Light Grey Color
XO	No Plating

TABLE II: Replacement Parts

Item	Part Number	Description	Material
1	140-065XMS-03	Cover Assembly	Grey Thermoplastic
2	687-499-2	Cover Screw Assembly	316 SST/Passivate
3	687-305Z132	Mounting Plate Assembly	300 Series SST
4	630-038XO-04K	1/8 Turn Flop Lid	Grey Thermoplastic
5	HBL8284I	Electrical Connector	N/A

© 2013 Glenair, Inc. CAGE Code 06324 Printed in U.S.A.

147-020XMS-05
(NSN: 5940-01-557-2634)
Dual Electrical Blade Type Receptacle Composite Box
15 Amp, 115 Volt 60 Hz, Grounded • Size 6.8 x 5.9 x 4.25

Basic Part Number	Finish *(See Table I)*	Basic Box Number
147-020	XMS	05

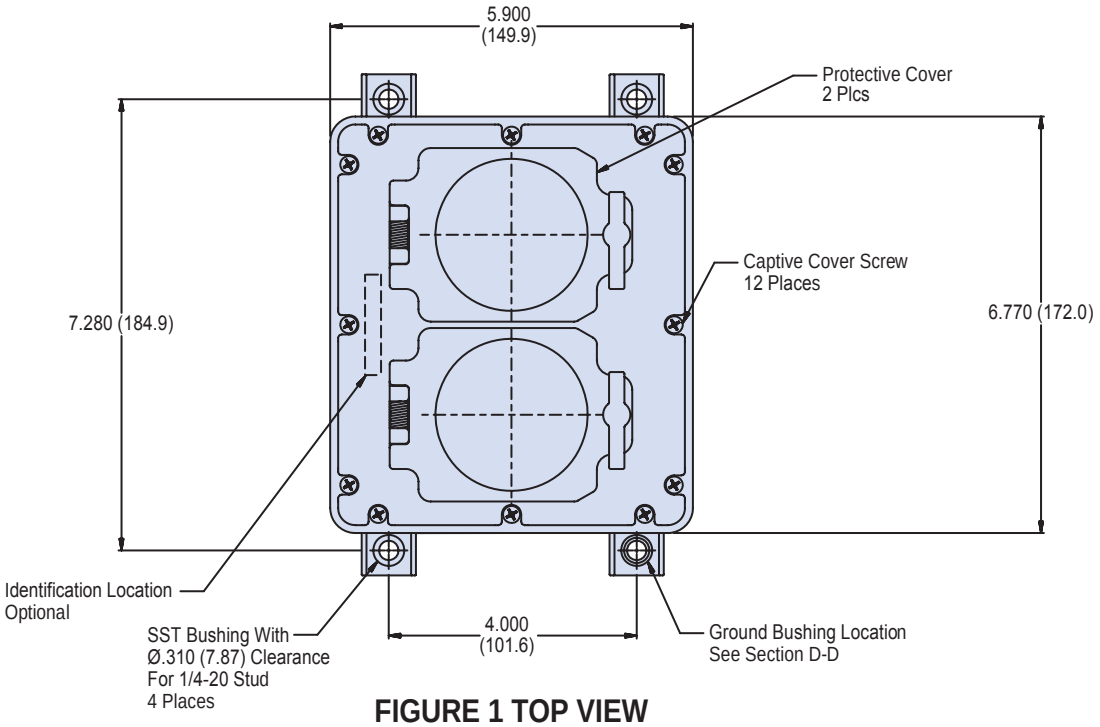

FIGURE 1 TOP VIEW

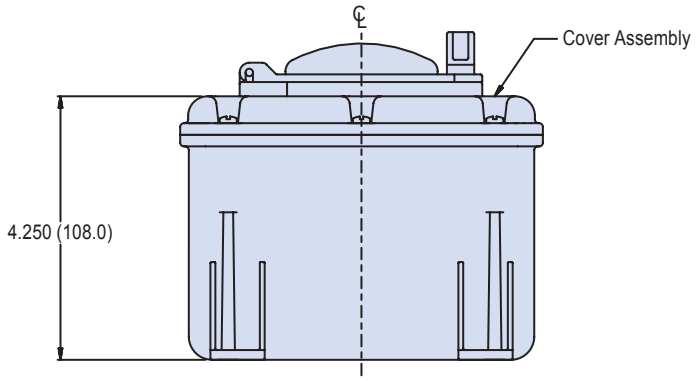

© 2013 Glenair, Inc. CAGE Code 06324 Printed in U.S.A.

147-020XMS-05
(NSN: 5940-01-557-2634)
Dual Electrical Blade Type Receptacle Composite Box
15 Amp, 115 Volt 60 Hz, Grounded • Size 6.8 x 5.9 x 4.25

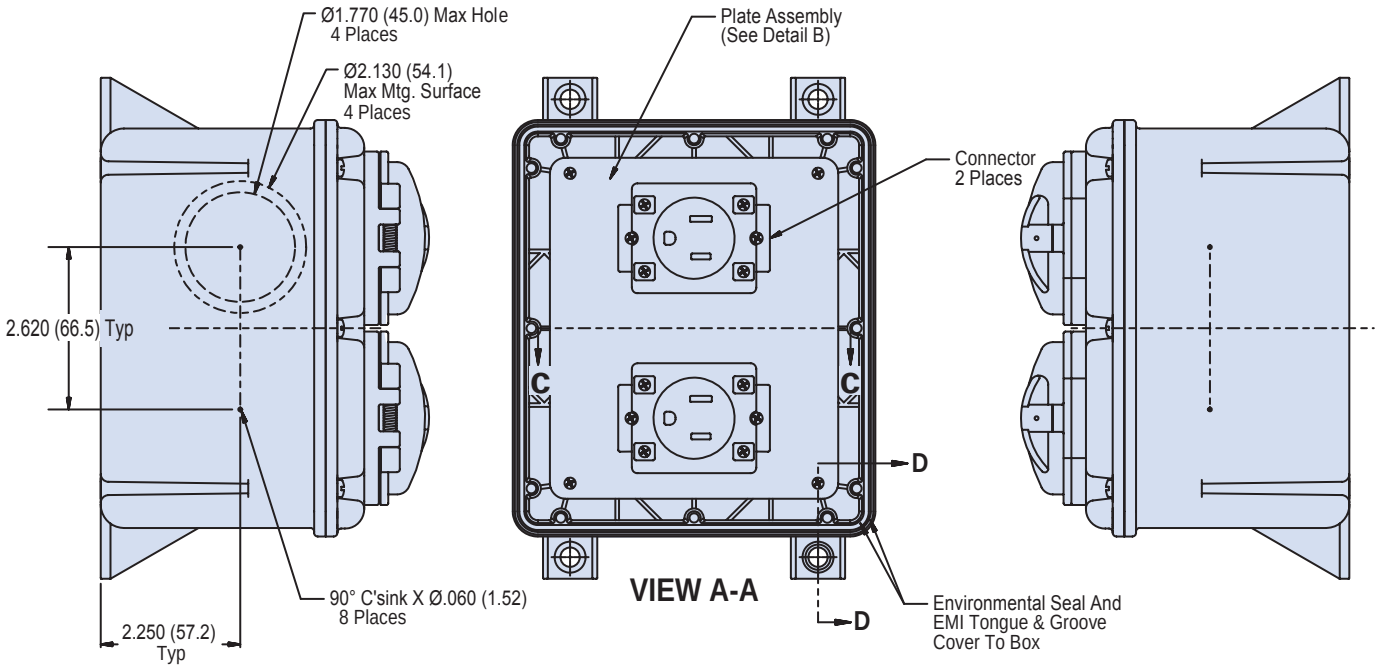

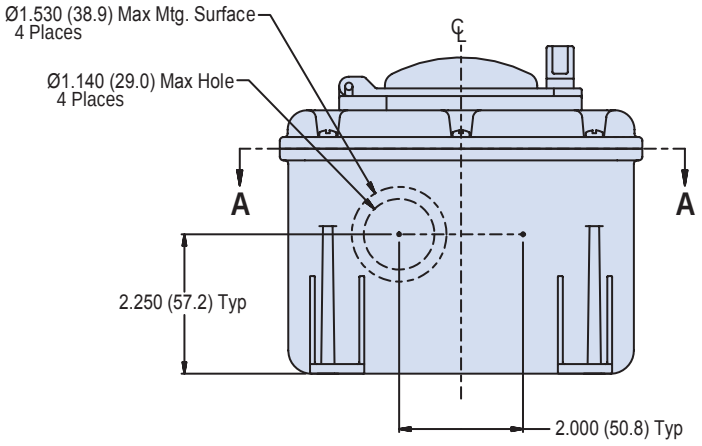

FIGURE 2

© 2013 Glenair, Inc.

GLENAIR, INC. • 1211 AIR WAY • GLENDALE, CA 91201-2497 • 818-247-6000 • FAX 818-500-9912
www.glenair.com
E-Mail: sales@glenair.com

147-020XMS-05
(NSN: 5940-01-557-2634)
Dual Electrical Blade Type Receptacle Composite Box
15 Amp, 115 Volt 60 Hz, Grounded • Size 6.8 x 5.9 x 4.25

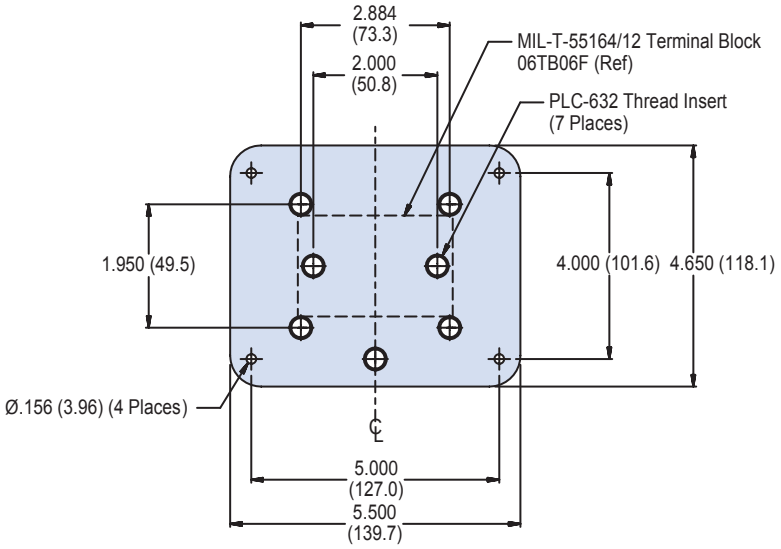

DETAIL B

APPLICATION NOTES

1. Assembly identified with manufacurer's code identification number (Glenair, part number and date code).
2. Color may be subject to fading, however UV exposure will not affect material physical properties.
3. Assembly is similar to symbol part numbers and require installation in accordance with NAVSEA drawing 803-6983506.
4. Material / Finish:
   Box, cover - Thermoplastic grey color/see Table I.
   Hardware - 316 SST/passivate.
   Seals and gaskets - Silicone/N.A.
   Mounting Plate - 300 series SST/passivate.
5. Metric dimensions (mm) are indicated in parentheses.

© 2013 Glenair, Inc.

GLENAIR, INC. • 1211 AIR WAY • GLENDALE, CA 91201-2497 • 818-247-6000 • FAX 818-500-9912
www.glenair.com
E-Mail: sales@glenair.com

147-020XMS-05
(NSN: 5940-01-557-2634)
Dual Electrical Blade Type Receptacle Composite Box
15 Amp, 115 Volt 60 Hz, Grounded • Size 6.8 x 5.9 x 4.25

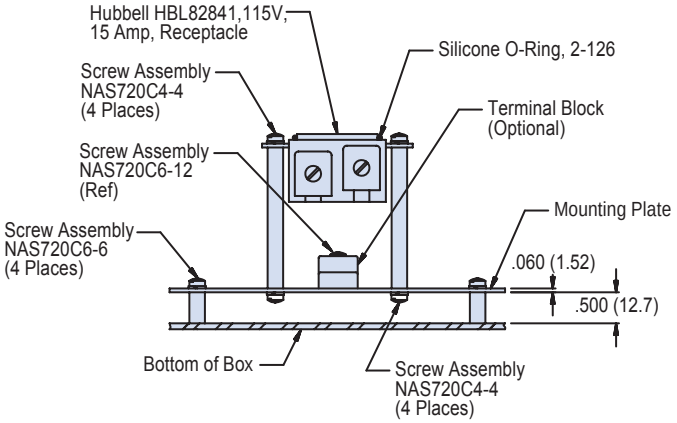

VIEW C-C

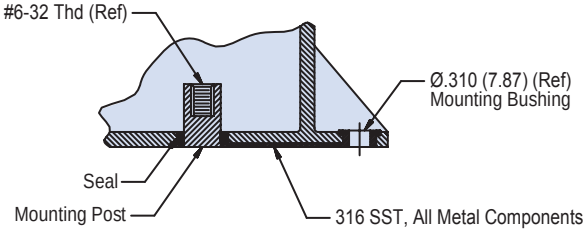

SECTION D-D

Electrical Ground Through Internal Mounting Post To External Mounting Bushing

TABLE I: Finish

Symbol	Description
XMS	Internal Surfaces - Electroless Nickel Exterior Surfaces - Unplated Light Grey Color
XO	No Plating

TABLE II: Replacement Parts

Item	Part Number	Description	Material
1	140-065XMS-16	Cover Assembly	Grey Thermoplastic
2	687-499-2	Cover Screw Assembly	316 SST/Passivate
3	687-305Z132	Mounting Plate Assembly	300 Series SST
4	630-038XO-04K	1/8 Turn Flop Lid	Grey Thermoplastic
5	HBL8284I	Electrical Connector	N/A

© 2013 Glenair, Inc. CAGE Code 06324 Printed in U.S.A.

147-065XMS-**
(See Table I for NSN Designator)
Replacement Lid Assembly for Glenair Composite Box Enclosures

Basic Part Number	Finish *(See Table II)*	Dash Number *(See Table I)*
140-065	XMS	- 01

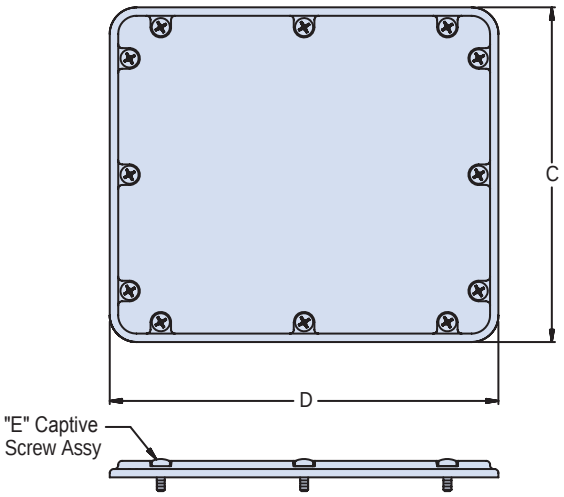

DASH 01, 17, 21 & 24

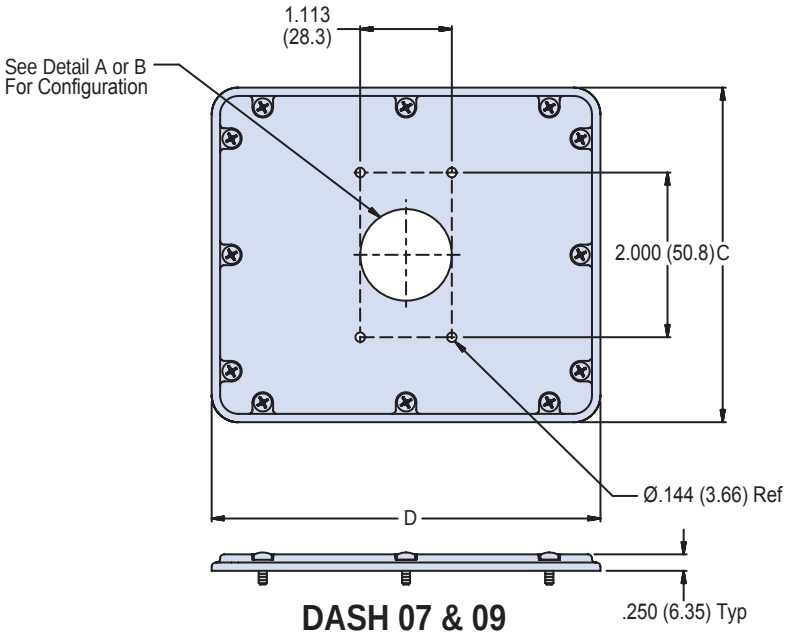

DASH 07 & 09

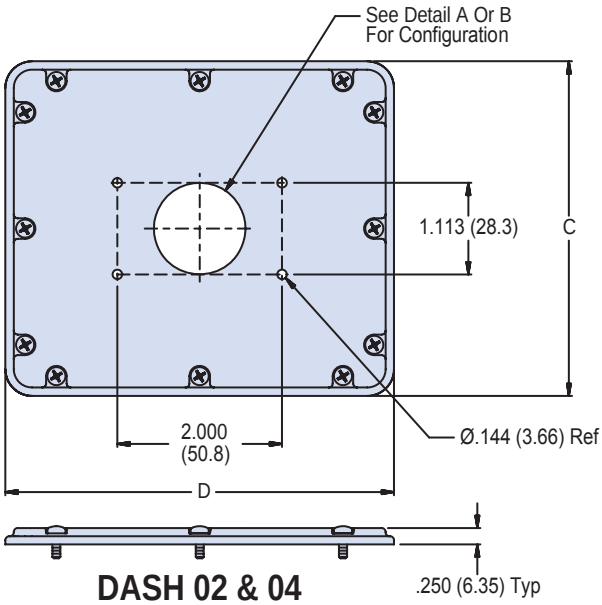

DASH 02 & 04

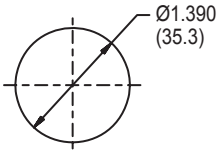

DETAIL A
115 VAC Receptacle, 630-038XO-02 Cover Assembly

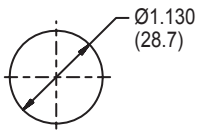

DETAIL B
227-059XO-04 Sound Power Jack, 630-038XO-02 Cover Assembly

© 2013 Glenair, Inc. CAGE Code 06324 Printed in U.S.A.

147-065XMS-**
(See Table I for NSN Designator)
Replacement Lid Assembly
for Glenair Composite Box Enclosures

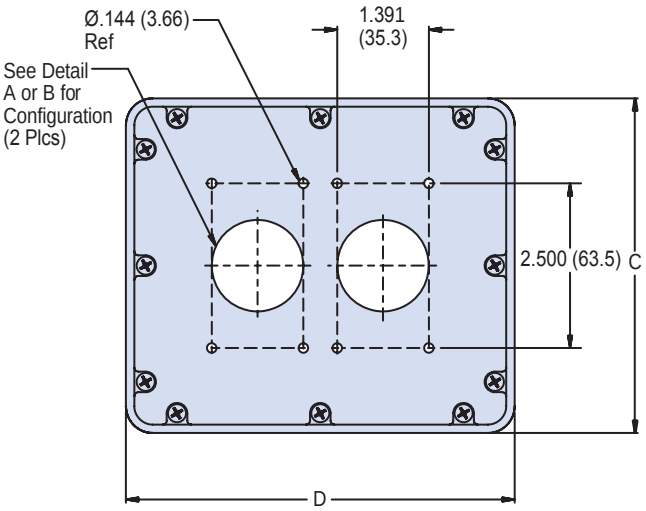

DASH 08 & 10

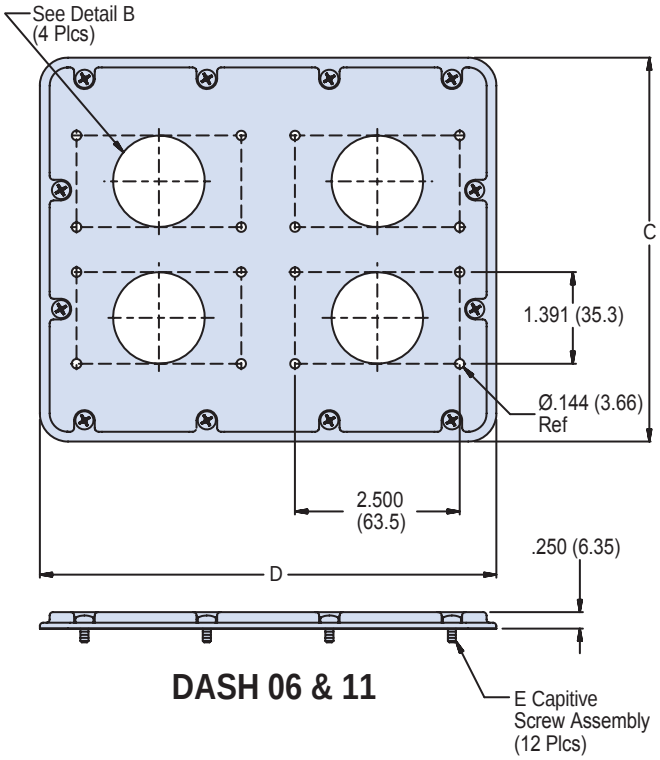

DASH 06 & 11

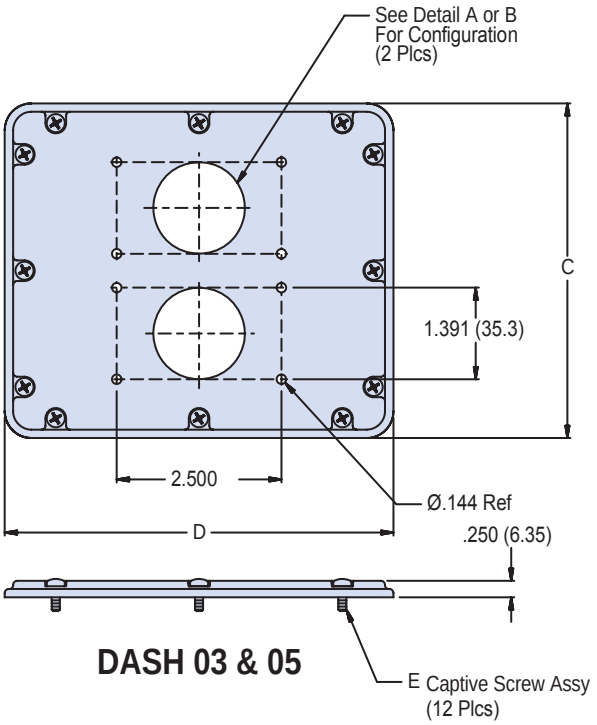

DASH 03 & 05

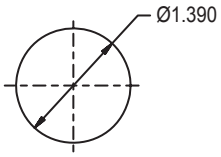

DETAIL A
115 VAC Receptacle,
630-038XO-02 Cover Assembly

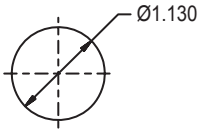

DETAIL B
227-059XO-04 Sound Power Jack,
630-038XO-02 Cover Assembly

© 2013 Glenair, Inc.

GLENAIR, INC. • 1211 AIR WAY • GLENDALE, CA 91201-2497 • 818-247-6000 • FAX 818-500-9912
www.glenair.com
E-Mail: sales@glenair.com

147-065XMS-**
(See Table I for NSN Designator)
Replacement Lid Assembly for Glenair Composite Box Enclosures

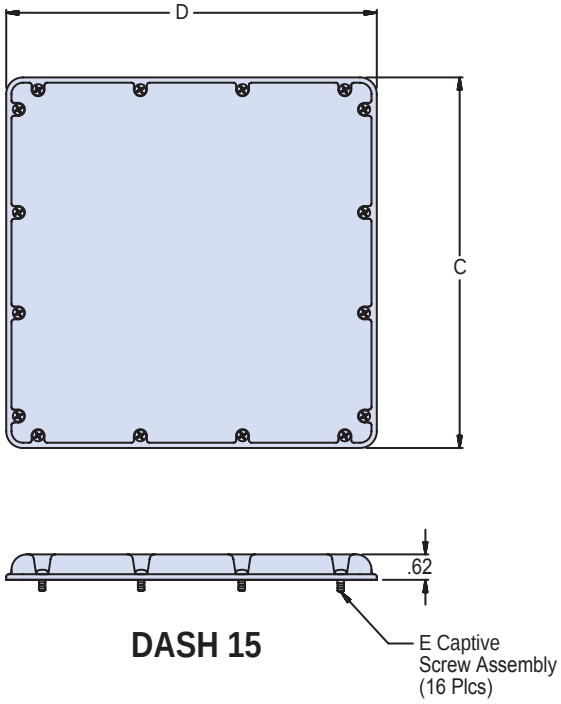

DASH 15

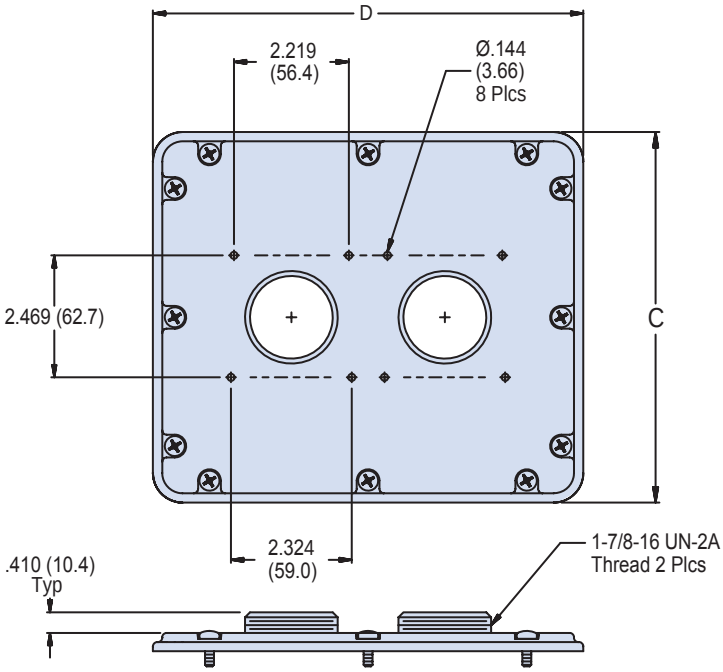

DASH 16

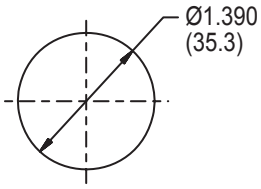

DETAIL A
115 VAC Receptacle,
630-038XO-02 Cover Assembly

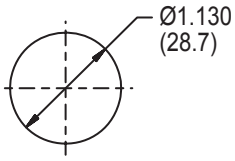

DETAIL B
227-059XO-04 Sound Power Jack,
630-038XO-02 Cover Assembly

© 2013 Glenair, Inc. CAGE Code 06324 Printed in U.S.A.

147-065XMS-**
(See Table I for NSN Designator)
Replacement Lid Assembly
for Glenair Composite Box Enclosures

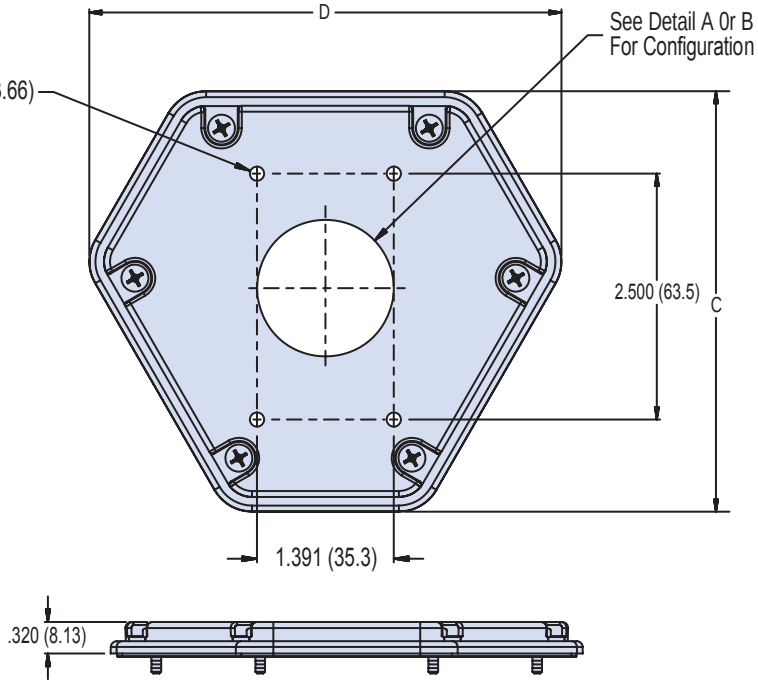

DASH 12 AND 13

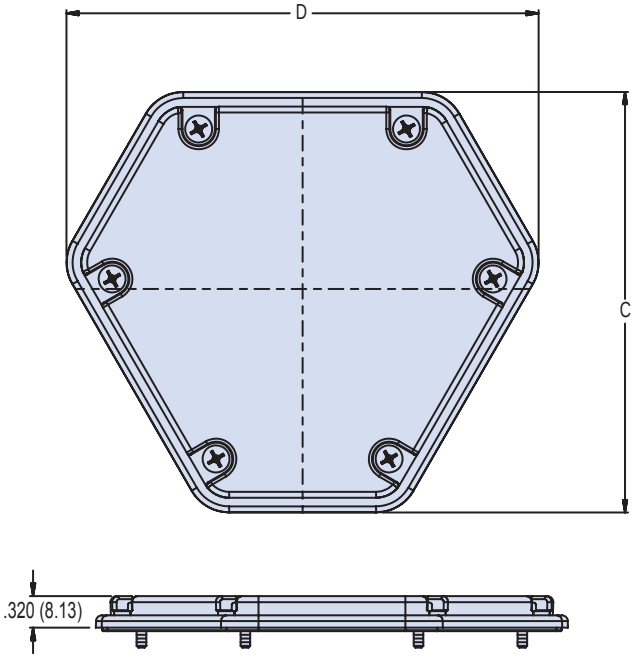

DASH 14

© 2013 Glenair, Inc.

GLENAIR, INC. • 1211 AIR WAY • GLENDALE, CA 91201-2497 • 818-247-6000 • FAX 818-500-9912
www.glenair.com
E-Mail: sales@glenair.com

147-065XMS-**
(See Table I for NSN Designator)
Replacement Lid Assembly for Glenair Composite Box Enclosures

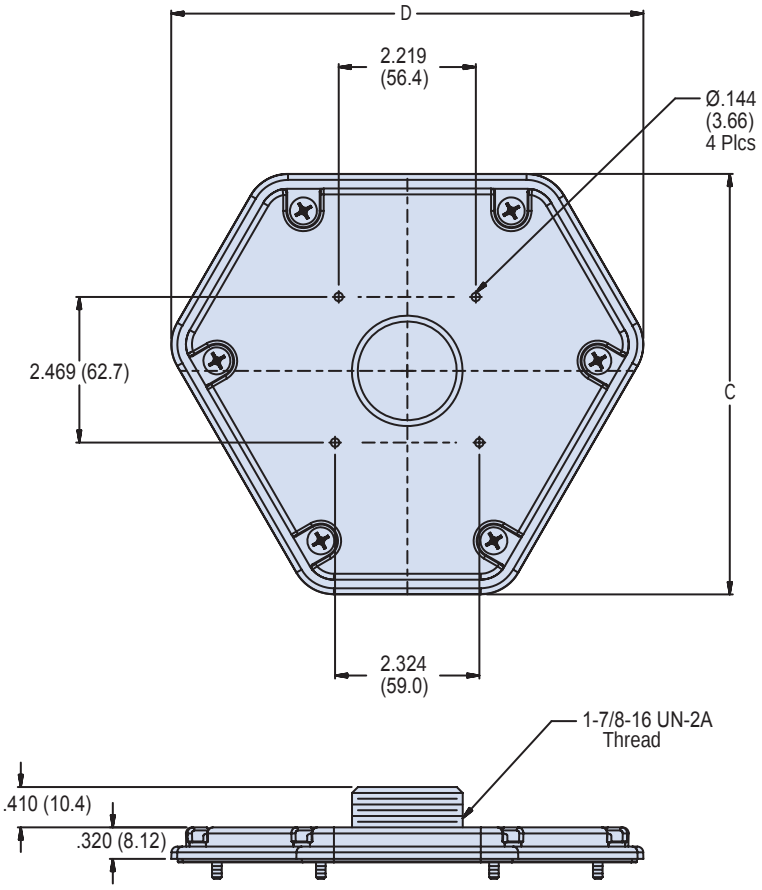

DASH 18

TABLE II: Finish	
Symbol	**Description**
XMS	Internal Surfaces - Electroless Nickel Exterior Surfaces - Unplated Light Grey Color
XO	No Plating

© 2013 Glenair, Inc.

GLENAIR, INC. • 1211 AIR WAY • GLENDALE, CA 91201-2497 • 818-247-6000 • FAX 818-500-9912
www.glenair.com
E-Mail: sales@glenair.com

147-065XMS-**
(See Table I for NSN Designator)
Replacement Lid Assembly
for Glenair Composite Box Enclosures

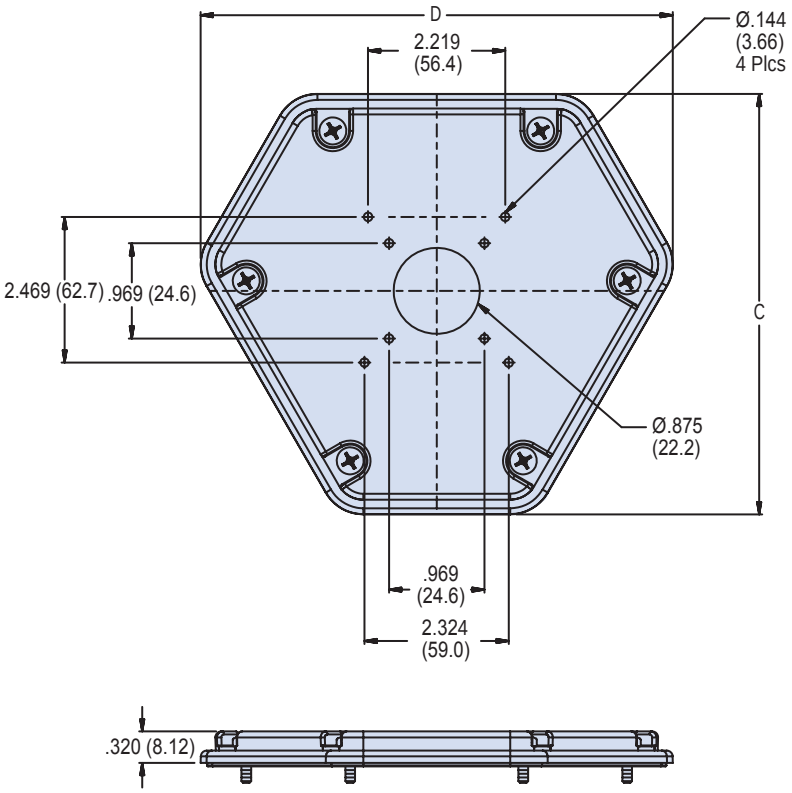

DASH 19

APPLICATION NOTES

1. Assembly to be bagged and tagged.
2. Color may be subject to fading, however UV exposure will not affect material physical properties.
3. Assembly is similar to symbol part numbers and require installation in accordance with NAVSEA drawing 803-6983506.
4. Material / Finish:
   Cover - Thermoplastic grey color/see Table II.
   Hardware - 316 SST/passivate.
   Elastomers - Silicone/N.A.
   Retainer - Buna/N.A.
5. NAVSEA approved; Dwg 803-698-3506.
6. Metric dimensions (mm) are indicated in parentheses.

© 2013 Glenair, Inc. CAGE Code 06324 Printed in U.S.A.

630-038XO-01K
(See Table I for NSN Designator)
Composite Box Cover Assembly for 147-020 and 147-021 Composite Boxes

Basic Part Number		Dash Number (See Table I)	
630-038	XO	- 01	K
	Finish (None)		Four Mounting Screws (NAS720C6-4)

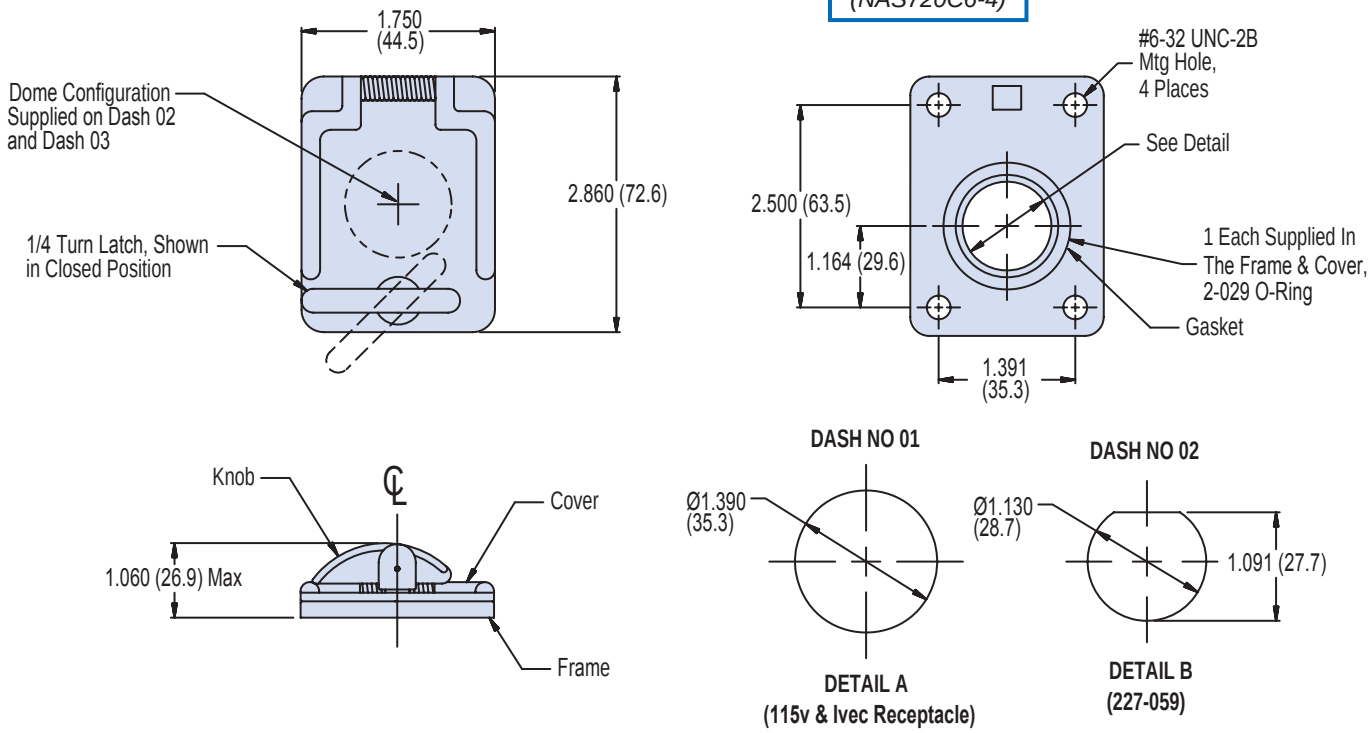

APPLICATION NOTES

1. Assembly identified with manufacturer's name and part number, space permitting.
2. Color may be subject to fading, however UV exposure will not affect material physical properties.
3. Material / Finish:
   Cover - Thermoplastic grey color/see Table II.
   Spring and shaft - 316 SST/passivate.
   Gaskets - Silicone rubber ZZ-R-765/N.A.
4. Metric dimensions (mm) are indicated in parentheses.

© 2013 Glenair, Inc. CAGE Code 06324 Printed in U.S.A.

630-038XO-01K
(See Table I for NSN Designator)
Composite Box Cover Assembly
for 147-020 and 147-021 Composite Boxes

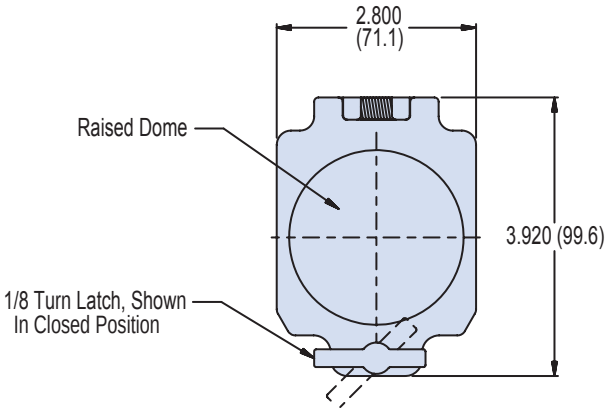

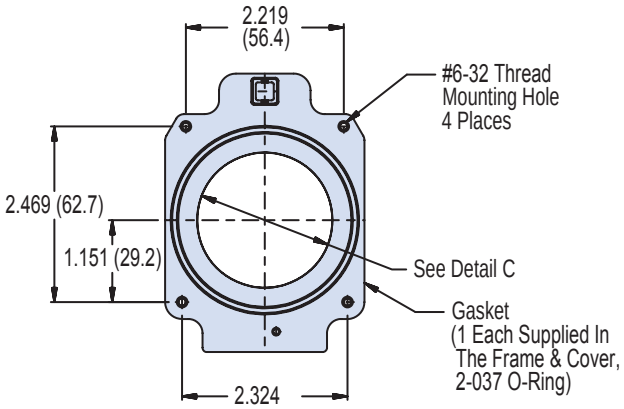

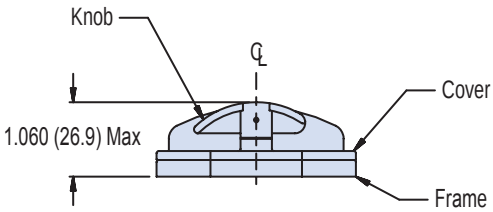

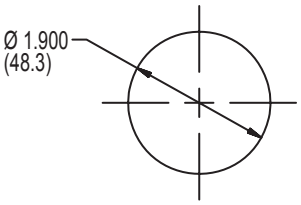

DETAIL C

TABLE I: Dash No. and NSN Designators

Dash No.	Cut-Out Detail	Used On	Sheet Reference	NSN Designator
01	A	147-020 Series	Sheet 1	5975-01-556-9621
02	B	147-021 Series	Sheet 1	5975-01-556-9582
03	A	140-043-0006	Sheet 1	
24	C	147-023-02	Sheet 2	5975-01-556-9627

© 2013 Glenair, Inc. CAGE Code 06324 Printed in U.S.A.

227-059XO-04W
(NSN: 5935-01-558-3700)
Composite Jam Nut Mount Receptacle Connector
Sound Power • MIL-T-24649/7

227-059 **XO** - **04** **W**

- **Basic Part Number**
- **Connector Style** *04 - Jam Nut Mounting*
- **Finish** *(See Table I)*
- **Pre-Wired Assembly** *Omit for None (See Note 5)*

TABLE I: Finish

Symbol	Description
XM	Conductive Electroless Nickel
XO	No Plating, Non Conductive

JAM NUT MOUNTING

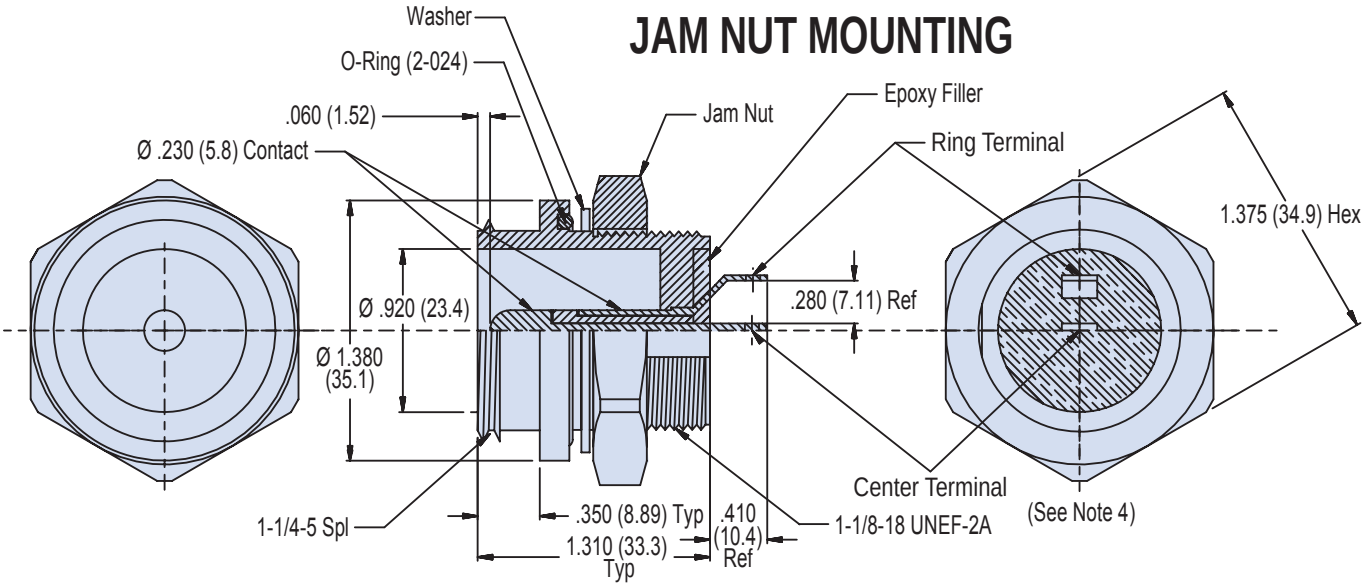

APPLICATION NOTES

1. Assembly identified with manufacturer's name and part number, space permitting.
2. Color may be subject to fading, however UV exposure will not affect material physical properties.
3. Material / Finish:
   Shell, insulator and jam nut - High temperature IAW AIR4567/See Table I.
   Contacts - Copper alloy/gold plate.
   O-Ring - Silicone rubber/N.A.
   Washer - 300 series SST/passivate.
   Filler - Epoxy (Stycast)/N.A.
4. Solder terminal holes for 22 and 20 gage wire.
5. Supplied pre-wired with MIL-W-16878/4 Type E stranded wire, 22 gage, center contact white, ring black, 12 inches (304.8) long with MS25036-101 terminal.
6. Glenair's 227-059 composite receptacle connector is designed to mate with H39A type jack plug and mount to Glenair part number 140-041 composite box lid.
7. Metric dimensions (mm) are indicated in parentheses.

© 2013 Glenair, Inc. CAGE Code 06324 Printed in U.S.A.

The Right Feed-Through Fitting for Every Shipboard Application—in Aluminum, Titanium, Composite Thermoplastic or Stainless Steel

Glenair manufactures a full spectrum line of feed-through fittings for routing wire and cable into and out of switchgear and other types of junction boxes. The fittings are also ideal for thru-panel and bulkhead applications.

From environmental sealers and EMI/RFI shield terminators to strain reliefs and shrink boot adapters—Glenair has the right feed-through for every application requirement. Our composite thermoplastic desings offer significant weight savings and unlimited corrosion protection.

Best of all, many of our most popular part numbers are in stock, in quantity and ready for immediate delivery.

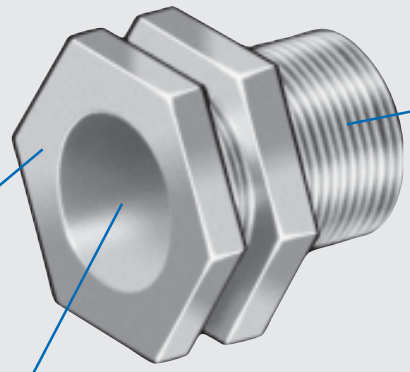

***Composite Thermoplastic Parts:** Unless otherwise specified, feed-through fittings will be finished per Table II. Consult factory for additional options for plating of composite components. Composite feed-throughs should be considered for applications where weight savings and extended corrosion protection is desired. Compared to aluminum alloy, composite materials provide equal or improved RFI/EMI protection; however, composite materials have lower thermal conductivity and reduced high-current grounding characteristics. Composite feed-throughs meet AS85049 requirements and are designed to for harsh environmental conditions and rugged physical strength demands. Please consult the factory for assistance in selecting the best materials and platings for your application.*

© 2013 Glenair, Inc. CAGE Code 06324 Printed in U.S.A.

Feed-Through Fittings
Standard Materials and Notes

The following standard materials are used for the majority of Glenair feed-through fittings and connector accessories. Feed-through components are not limited to those items listed, but are representative of the elements used in the majority of standard components. Contact Glenair for applicable specifications on items not listed below, or for more information on composite thermoplastic material options.

STANDARD MATERIALS - FEED-THROUGH FITTINGS

COMPONENT	MATERIAL	SPECIFICATION
Machined components: such as feed-through bodies, strain reliefs, banding platforms, rotatable couplers, mounting plates, lock nuts, G-spring support rings, EMI ground rings, grommet followers, etc.	Aluminum	QQ-A-200, 225 ASTMB211, 221
Feed-throughs and strain reliefs: available in optional injection molded and/or machined composite thermoplastic.	Engineering thermoplastic such as PEI	AIR 4567 MIL-C-85049
Feed-throughs and strain reliefs: available in optional corrosion resisting steel; and hardware such as screws, washers, rivets, band straps, etc.	Corrosion Resisting Steel	QQ-S-763 (300 Series)
Anti-friction and thrust washers	Teflon	ZZ-R-765
Elastomeric seals: such as O-rings, cable jacket seals, grommets, etc.	Silicone	TFE
Anti-rotation device	Corrosion Resistant Material	

NOTES

On all length callouts, tolerance is ± .060 unless otherwise specified.

Unless otherwise specified, the following other dimensional tolerances will apply:

.xx = ± .03 (0.8)
.xxx = ± .015 (0.4)
Lengths = ± .060 (1.52)
Angles = ± 5°

Metric dimensions (mm) are indicated in parentheses

GENERAL COMPOSITE CHARACTERISTICS

- 24 KPSI - 38 KPSI Tensile Strength
- 33 KPSI - 54 KPSI Flexural Strength
- 1,300 KPSI - 2,100 KPSI Flexural Modulus
- 175 - 200° Celsius Operating Temperature
- CTE, Composite: @ 10^5 inch/inch °F is 1.10 - 1.40
- Meets ASTM-E-595, NASA SP-R-0022A Outgassing Requirements for Space

Contact factory for specific data.

© 2013 Glenair, Inc. CAGE Code 06324 Printed in U.S.A.

TABLE II - STANDARD MATERIALS AND FINISHES	
FINISH	**ALUMINUM ALLOY (I.A.W. QQ-A-225)***
NF	Cadmium Plate, Olive Drab per QQ-P-416, Type II, Class 3 over Electroless Nickel Plate per MIL-C-26074 Class 3 or 4, .0005 Minimum Thickness. 1,000 hrs. Corrosion Resistance.
ZN	Zinc Alloy Plate per ASTMB 841-91, Class 1, Type E, Grade 3, over Electroless Nickel Plate per ASTMB 733-90 SC2, Type 1, Class 5, Olive Drab.
GB	Hard Coat, Anodic, Color Black, MIL-A-8625, Type III, Class 1 (Not suitable for EMI shielding or grounding).
MT	Nickel Plate with PTFE, Gray, 1,000 Hour Salt Spray
TZ	Tin-Zinc, Green/Gold, 1,000 Hour Salt Spray, Cadmium Compatible.
FINISH	**STAINLESS STEEL (300 Series Cres I.A.W. QQ-S-763)**
Z1	Passivate per QQ-P-35. Applicable to corrosion-resisting steel backshells and accessories.
ZM	Electroless Nickel Plate per MIL-C-26074, Class 30R4, Grade A.
MS	Electroless Nickel, Matte Finish
FINISH	**TITANIUM**
TP	Electroless Nickel
FINISH	**HIGH-GRADE ENGINEERING THERMOPLASTIC COMPOSITE**
XB	Nickel Plate, Thermoplastic Composite Material (Non-Conductive).
XO	No Plating, Black Thermoplastic Composite Material (Non-Conductive).
XM	Electroless Nickel Plate, 1,000 hrs. Corrosion Resistance.
XW	Cadmium Plate, Olive Drab over Electroless Nickel. 1,000 hrs. Corrosion Resistance.

* Aluminum components are not recommended for above-deck (weather-deck) shipboard use. Glenair's CostSaver Composite EMI/RFI Junction Boxes should not be paired with aluminum feed-through fittings when used in exposed, harsh-weather environments. Despite protective platings, aluminum interconnect components corrode too quickly when exposed to salt spray or other corrosive liquids to be useful in these settings.

© 2013 Glenair, Inc. CAGE Code 06324 Printed in U.S.A.

630-005
Square Flange Feed-Through Fittings
"G"=Spring RFI/EMI Environmental

Product Series	Fitting Type	Basic Part Number	Finish	Dash Number	Fitting Style	Strain Relief Style
630	A	005	NF	16	2	G

Fitting Type
A - Rear Mount
B - Front Mount

Finish
See Table II, Page D-3

Dash Number
See Table III

Strain Relief Style
G or F
See 1 & 2 Fitting Style Illustrations

Fitting Style
1 - RFI/EMI Only
2 - RFI/EMI Environmental

"G"-Spring Style Shield Termination for Strain Relief Styles G and F

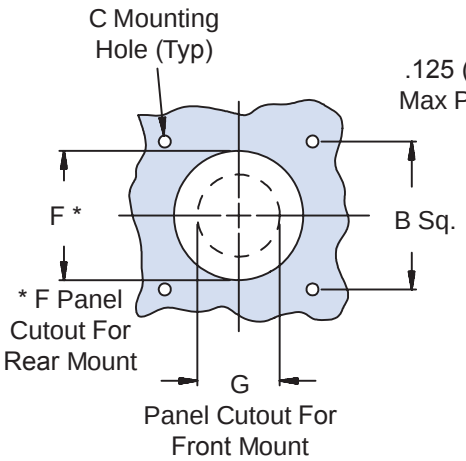

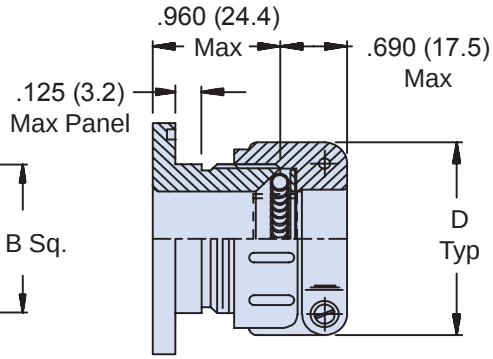

Style 1
Rear Mount Type A
RFI/EMI
(Shown With Style F Strain Relief)

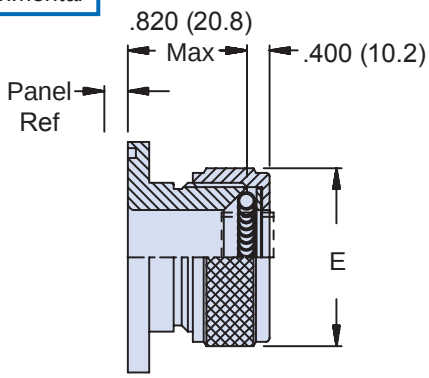

Style 1
Front Mount Type B
RFI/EMI
(Shown With Style G Gland Nut)

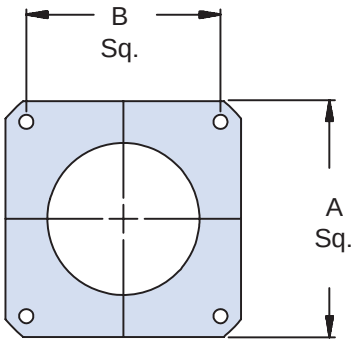

469-001-XX Shield Support Ring (order separately) is recommended for use in all G-Spring Bulkhead Fittings

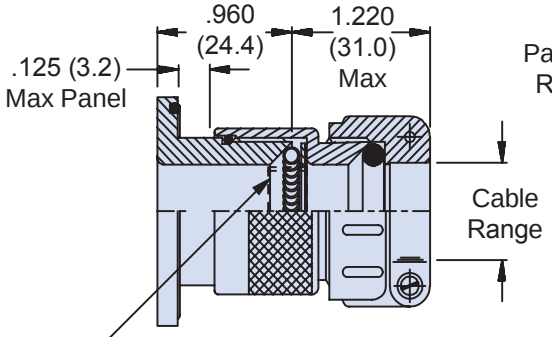

Style 2
Rear Mount Type A
RFI/EMI Environmental
(Shown With Style F Strain Relief)

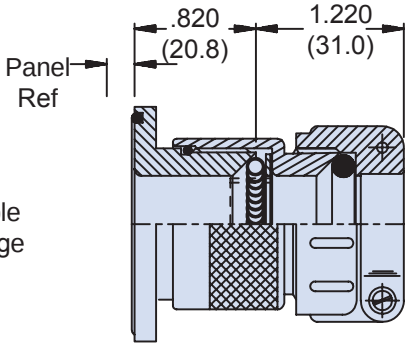

Style 2
Front Mount Type B
RFI/EMI Environmental
(Shown With Style F Strain Relief)

© 2013 Glenair, Inc.

GLENAIR, INC. • 1211 AIR WAY • GLENDALE, CA 91201-2497 • 818-247-6000 • FAX 818-500-9912
www.glenair.com E-Mail: sales@glenair.com

630-005
Square Flange Feed-Through Fittings
"G"=Spring RFI/EMI Environmental

Glenair®

TABLE III: Dash Number, Cable Range and Dimensions (Continued Below)

Dash No.	Cable Range Min		Cable Range Max		A Max		B Dim		C +.015 - 0	(+0.4) (-0.0)
01	.156	(4.0)	.250	(6.4)	.885	(22.5)	.593	(15.1)	.120	(3.0)
02	.188	(4.8)	.375	(9.5)	1.104	(28.0)	.812	(20.6)	.120	(3.0)
03	.250	(6.4)	.438	(11.1)	1.197	(30.4)	.906	(23.0)	.120	(3.0)
04	.280	(7.1)	.500	(12.7)	1.291	(32.8)	.968	(24.6)	.120	(3.0)
05	.375	(9.5)	.625	(15.9)	1.385	(35.2)	1.062	(27.0)	.120	(3.0)
06	.500	(12.7)	.750	(19.1)	1.635	(41.5)	1.250	(31.8)	.120	(3.0)
07	.625	(15.9)	.875	(22.2)	1.760	(44.7)	1.375	(34.9)	.147	(3.7)
08	.750	(19.1)	1.000	(25.4)	2.010	(51.1)	1.562	(39.7)	.147	(3.7)
09	.875	(22.2)	1.125	(28.6)	2.260	(57.4)	1.750	(44.5)	.173	(4.4)
10	1.000	(25.4)	1.250	(31.8)	2.510	(63.8)	1.938	(49.2)	.173	(4.4)
11	1.125	(28.6)	1.375	(34.9)	2.760	(70.1)	2.125	(54.0)	.173	(4.4)

TABLE III: (Continued from Above)

Dash No.	D Max		E Max		F +.015 - 0	(+0.4) (-0.0)	G +.031 - 0	(+0.8) (-0.0)
01	.843	(21.4)	.625	(15.9)	.515	(13.1)	.250	(6.4)
02	.968	(24.6)	.750	(19.1)	.640	(16.3)	.375	(9.5)
03	1.046	(26.6)	.875	(22.2)	.765	(19.4)	.438	(11.1)
04	1.156	(29.4)	1.000	(25.4)	.890	(22.6)	.500	(12.7)
05	1.218	(30.9)	1.125	(28.6)	1.015	(25.8)	.625	(15.9)
06	1.343	(34.1)	1.250	(31.8)	1.140	(29.0)	.750	(19.1)
07	1.468	(37.3)	1.375	(34.9)	1.265	(32.1)	.875	(22.2)
08	1.593	(40.5)	1.500	(38.1)	1.390	(35.3)	1.000	(25.4)
09	1.718	(43.6)	1.625	(41.3)	1.515	(38.5)	1.125	(28.6)
10	1.843	(46.8)	1.750	(44.5)	1.640	(41.7)	1.250	(31.8)
11	2.187	(55.5)	1.875	(47.6)	1.765	(44.8)	1.375	(34.9)

APPLICATION NOTES

1. Assembly identified with manufacturer's name and part number, space permitting.
2. Cable range is defined as the accommodations range for the wire bundle or cable. Dimensions shown are not intended for inspection criteria.
3. Material / Finish: See Table II.
4. For proper termination, it is recommended that Glenair 469-001 shield support bring be used on all assemblies. Place ring over wire and under shield; position under G-spring. Please consult factory for more information.
5. "G"-spring fittings are not available in composite thermoplastic.
6. Metric dimensions (mm) are indicated in parentheses.

© 2013 Glenair, Inc. CAGE Code 06324 Printed in U.S.A.

630-006
Square Flange Feed-Through Fittings
RFI/EMI Environmental

Product Series	Fitting Type	Basic Part Number	Finish	Dash Number	Fitting Style	Strain Relief Style
630	A	006	NF	16	2	A

Fitting Type
A - Rear Mount
B - Front Mount

Finish
See Table II, Page D-3

Dash Number
See Table III

Strain Relief Style
H, A, M or D

Fitting Style
1 - RFI/EMI Only
2 - Environmental Only
3 - RFI/EMI Environmental
4 - Non-RFI/EMI Non-environmental

For Strain Relief Styles H, A, M and D

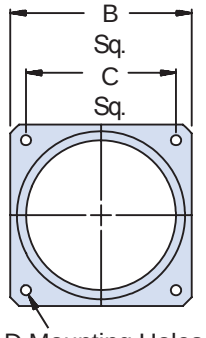

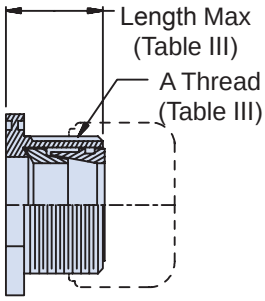

Style 1
Type B - Front Mount
RFI/EMI

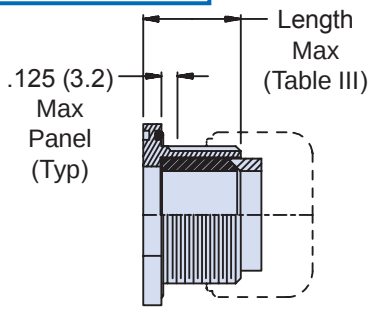

Style 2
Type A - Rear Mount
Environmental

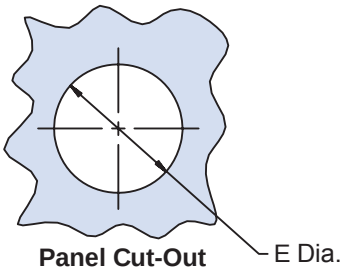

Panel Cut-Out

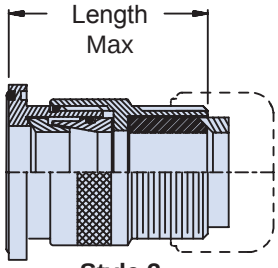

Style 3 -
Type B - Front Mount
RFI/EMI Environmental

APPLICATION NOTES

1. Assembly identified with manufacturer's name and part number, space permitting.
2. Cable range is defined as the accommodations range for the wire bundle or cable. Dimensions shown are not intended for inspection criteria.
3. Material / Finish: See Table II.
4. Metric dimensions (mm) are indicated in parentheses.

STYLE H
Heavy Duty

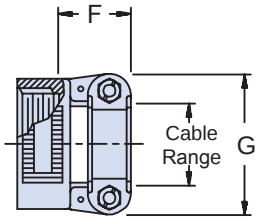

STYLE A
Medium Duty

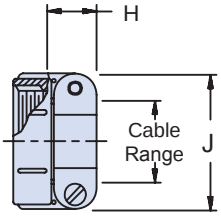

STYLE M
Medium Duty

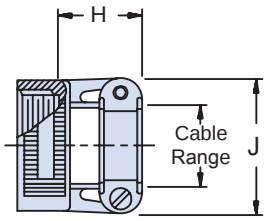

STYLE D
Medium Duty

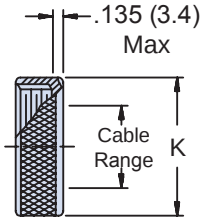

© 2013 Glenair, Inc.

630-006
Square Flange Feed-Through Fittings
RFI/EMI Environmental

Glenair®

TABLE III: Dash Number, Cable Range and Dimensions (Continued Below)

Dash No.	Style	Clamp Size	Cable Range Min		Cable Range Max		A Thread Unified	B Dim		C Sq. ± .010	(± .3)	D Dia -.000 + .015	(+ .4)	E Dia -.000 + .030	(+.8)
01	1, 2, 4	03	.157	(4.0)	.250	(6.4)	1/2 -28	.885	(22.5)	.593	(15.1)	.120	(3.0)	.250	(6.4)
02	3	03	.157	(4.0)	.250	(6.4)	1/2 -28	.885	(22.5)	.593	(15.1)	.120	(3.0)	.250	(6.4)
03	1,2, 4	04	.187	(4.7)	.312	(7.9)	5/8 -24	1.104	(28.0)	.812	(20.6)	.120	(3.0)	.312	(7.9)
04	3	04	.187	(4.7)	.312	(7.9)	5/8 -24	1.104	(28.0)	.812	(20.6)	.120	(3.0)	.312	(7.9)
05	1, 2, 4	06	.281	(7.1)	.437	(11.1)	3/4 -20	1.197	(30.4)	.906	(23.0)	.120	(3.0)	.437	(11.1)
06	3	06	.281	(7.1)	.437	(11.1)	3/4 -20	1.197	(30.4)	.906	(23.0)	.120	(3.0)	.437	(11.1)
07	1,2, 4	08	.344	(8.7)	.562	(14.3)	7/8 -20	1.291	(32.8)	.968	(24.6)	.120	(3.0)	.562	(14.3)
08	3	08	.387	(9.8)	.562	(14.3)	7/8 -20	1.291	(32.8)	.968	(24.6)	.120	(3.0)	.562	(14.3)
09	1, 2, 4	10	.375	(9.5)	.625	(15.9)	1 -20	1.385	(35.2)	1.062	(27.0)	.120	(3.0)	.625	(15.9)
10	3	10	.512	(13.0)	.625	(15.9)	1 -20	1.385	(35.2)	1.062	(27.0)	.120	(3.0)	.625	(15.9)
11	1,2, 4	12	.438	(11.1)	.750	(19.1)	1 3/16 -18	1.635	(41.5)	1.250	(31.8)	.120	(3.0)	.750	(19.1)
12	3	12	.575	(14.6)	.750	(19.1)	1 3/16 -18	1.635	(41.5)	1.250	(31.8)	.120	(3.0)	.750	(19.1)
13	1, 2, 4	16	.625	(15.9)	.937	(23.8)	1 7/16 -18	1.760	(44.7)	1.375	(34.9)	.147	(3.7)	.937	(23.8)
14	3	16	.625	(15.9)	.937	(23.8)	1 7/16 -18	1.760	(44.7)	1.375	(34.9)	.147	(3.7)	.937	(23.8)
15	1,2, 4	20	.875	(22.2)	1.250	(31.8)	1 3/4 -18	2.010	(51.1)	1.562	(39.7)	.147	(3.7)	1.250	(31.8)
16	3	20	.875	(22.2)	1.250	(31.8)	1 3/4 -18	2.010	(51.1)	1.562	(39.7)	.147	(3.7)	1.250	(31.8)
17	1, 2, 4	24	1.000	(25.4)	1.375	(34.9)	2 -18	2.260	(57.4)	1.750	(44.5)	.173	(4.4)	1.375	(34.9)
18	3	24	1.000	(25.4)	1.375	(34.9)	2 -18	2.260	(57.4)	1.750	(44.5)	.173	(4.4)	1.375	(34.9)
19	1,2, 4	28	1.250	(31.8)	1.625	(41.3)	2 1/4 -16	2.510	(63.8)	1.938	(49.2)	.173	(4.4)	1.625	(41.3)
20	3	28	1.250	(31.8)	1.625	(41.3)	2 1/4 -16	2.510	(63.8)	1.938	(49.2)	.173	(4.4)	1.625	(41.3)
21	1, 2, 4	32	1.437	(36.5)	1.875	(47.6)	2 1/2 -16	2.781	(70.6)	2.188	(55.6)	.173	(4.4)	1.875	(47.6)
22	3	32	1.437	(36.5)	1.875	(47.6)	2 1/2 -16	2.781	(70.6)	2.188	(55.6)	.173	(4.4)	1.875	(47.6)
23	1,2, 4	40	1.875	(47.6)	2.375	(60.3)	3 -16	3.281	(83.3)	2.625	(66.7)	.173	(4.4)	2.375	(60.3)
24	3	40	1.875	(47.6)	2.375	(60.3)	3 -16	3.281	(83.3)	2.625	(66.7)	.173	(4.4)	2.375	(60.3)

TABLE III: (Continued from Above)

Dash No.	Style	F Max		G Max		H Max		J Max		K Max		Length Max	
01	1, 2, 4	---	---	---	---	.760	(19.3)	.843	(21.4)	.630	(16.0)	.971	(24.7)
02	3	---	---	---	---	.760	(19.3)	.843	(21.4)	.630	(16.0)	1.820	(46.2)
03	1,2, 4	.780	(19.8)	.957	(24.3)	.760	(19.3)	.906	(23.0)	.755	(19.2)	.971	(24.7)
04	3	.780	(19.8)	.957	(24.3)	.760	(19.3)	.906	(23.0)	.755	(19.2)	1.820	(46.2)
05	1, 2, 4	.780	(19.8)	1.145	(29.1)	.760	(19.3)	1.093	(27.8)	.942	(23.9)	.971	(24.7)
06	3	.780	(19.8)	1.145	(29.1)	.760	(19.3)	1.093	(27.8)	.942	(23.9)	1.820	(46.2)
07	1,2, 4	.780	(19.8)	1.332	(33.8)	.760	(19.3)	1.187	(30.1)	1.067	(27.1)	.971	(24.7)
08	3	.780	(19.8)	1.332	(33.8)	.760	(19.3)	1.187	(30.1)	1.067	(27.1)	1.820	(46.2)
09	1, 2, 4	.780	(19.8)	1.332	(33.8)	.760	(19.3)	1.281	(32.5)	1.192	(30.3)	.971	(24.7)
10	3	.780	(19.8)	1.332	(33.8)	.760	(19.3)	1.281	(32.5)	1.192	(30.3)	1.820	(46.2)
11	1,2, 4	.811	(20.6)	1.551	(39.4)	.760	(19.3)	1.500	(38.1)	1.380	(35.1)	1.031	(26.2)
12	3	.811	(20.6)	1.551	(39.4)	.760	(19.3)	1.500	(38.1)	1.380	(35.1)	1.820	(46.2)
13	1, 2, 4	.905	(23.0)	1.770	(45.0)	1.073	(27.3)	1.719	(43.7)	1.535	(39.0)	1.031	(26.2)
14	3	.905	(23.0)	1.770	(45.0)	1.073	(27.3)	1.719	(43.7)	1.535	(39.0)	1.820	(46.2)
15	1,2, 4	1.092	(27.7)	2.113	(53.7)	1.323	(33.6)	2.062	(52.4)	1.848	(46.9)	1.031	(26.2)
16	3	1.092	(27.7)	2.113	(53.7)	1.323	(33.6)	2.062	(52.4)	1.848	(46.9)	1.820	(46.2)
17	1, 2, 4	1.124	(28.5)	2.363	(60.0)	1.323	(33.6)	2.312	(58.7)	2.255	(57.3)	1.095	(27.8)
18	3	1.124	(28.5)	2.363	(60.0)	1.323	(33.6)	2.312	(58.7)	2.255	(57.3)	1.820	(46.2)
19	1,2, 4	1.399	(35.5)	2.770	(70.4)	1.572	(39.9)	2.719	(69.1)	2.505	(63.6)	1.095	(27.8)
20	3	1.399	(35.5)	2.770	(70.4)	1.572	(39.9)	2.719	(69.1)	2.505	(63.6)	1.820	(46.2)
21	1, 2, 4	1.399	(35.5)	3.020	(76.7)	1.572	(39.9)	2.969	(75.4)	2.755	(70.0)	1.095	(27.8)
22	3	1.399	(35.5)	3.020	(76.7)	1.572	(39.9)	2.969	(75.4)	2.755	(70.0)	1.940	(49.3)
23	1,2, 4	---	---	---	---	1.572	(39.9)	3.531	(89.7)	3.255	(82.7)	1.220	(31.0)
24	3	---	---	---	---	1.572	(39.9)	3.531	(89.7)	3.255	(82.7)	2.060	(52.3)

© 2013 Glenair, Inc. CAGE Code 06324 Printed in U.S.A.

630-007
Jam Nut Feed-Through Fittings
RFI/EMI Environmental

Product Series	Fitting Type	Basic Part Number	Finish	Dash Number	Fitting Style	Strain Relief Style
630	A	007	NF	16	2	A

Fitting Type
A - Rear Mount
B - Front Mount

Finish
See Table II, Page D-3

Dash Number
See Table III

Strain Relief Style
H, A, M or D

Fitting Style
1 - RFI/EMI Only
2 - Environmental Only
3 - RFI/EMI Environmental
4 - Non-RFI/EMI, Non-Environmental

For Strain Relief Styles H, A, M and D

APPLICATION NOTES

1. Assembly identified with manufacturer's name and part number, space permitting.
2. Cable range is defined as the accommodations range for the wire bundle or cable. Dimensions shown are not intended for inspection criteria.
3. Material / Finish: See Table II.
4. Metric dimensions (mm) are indicated in parentheses.

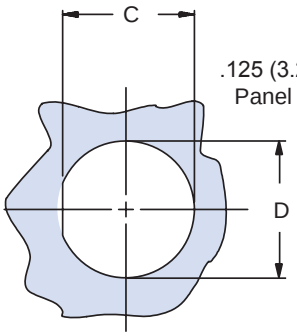

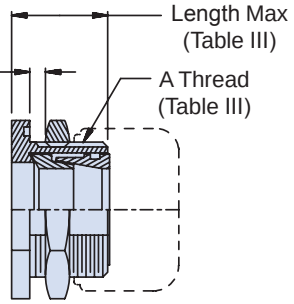

Style 1 - RFI/EMI
Type A - Rear Mount

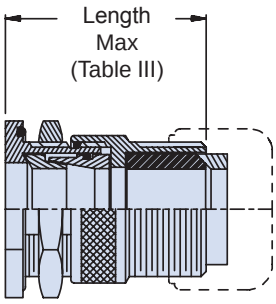

Style 3 - RFI/EMI Environmental
Type A - Rear Mount

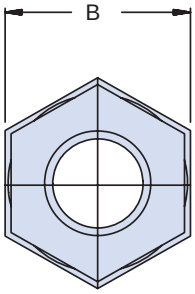

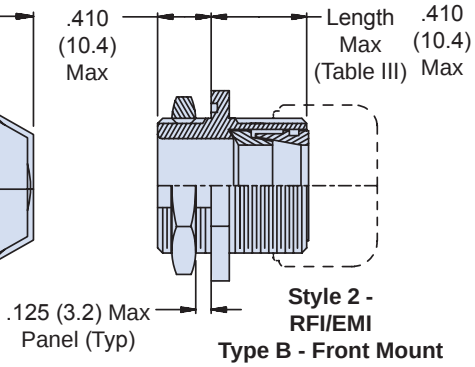

Style 2 - RFI/EMI
Type B - Front Mount

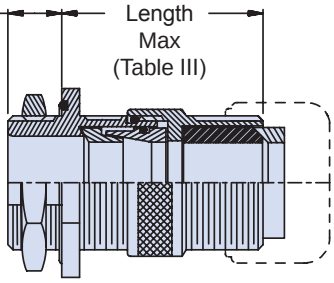

Style 3 - RFI/EMI Environmental
Type B - Front Mount

STYLE H
Heavy Duty

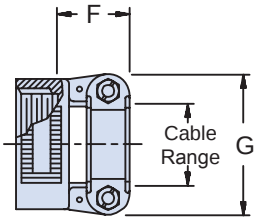

STYLE A
Medium Duty

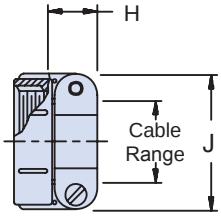

STYLE M
Medium Duty

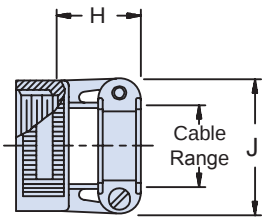

STYLE D
Medium Duty

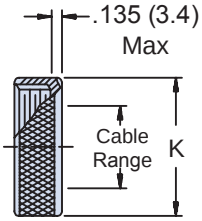

© 2013 Glenair, Inc.

GLENAIR, INC. • 1211 AIR WAY • GLENDALE, CA 91201-2497 • 818-247-6000 • FAX 818-500-9912
www.glenair.com
E-Mail: sales@glenair.com

630-007
Jam Nut Feed-Through Fittings
RFI/EMI Environmental

Glenair®

TABLE III: Dash Number, Cable Range and Dimensions (Continued Below)

Dash No.	Style	Clamp Size	Cable Range Min		Cable Range Max		A Thread Unified	B Dim		C Flat ± .010	(± .3)	D Dia ± .010	(± .3)
01	1, 2	03	.157	(4.0)	.250	(6.4)	1/2 -28	.688	(17.5)	.479	(12.2)	.515	(13.1)
02	3	03	.157	(4.0)	.250	(6.4)	1/2 -28	.688	(17.5)	.479	(12.2)	.515	(13.1)
03	1,2	04	.187	(4.7)	.312	(7.9)	5/8 -24	.813	(20.7)	.595	(15.1)	.640	(16.3)
04	3	04	.187	(4.7)	.312	(7.9)	5/8 -24	.813	(20.7)	.595	(15.1)	.640	(16.3)
05	1, 2	06	.281	(7.1)	.437	(11.1)	3/4 -20	.938	(23.8)	.720	(18.3)	.765	(19.4)
06	3	06	.281	(7.1)	.437	(11.1)	3/4 -20	.938	(23.8)	.720	(18.3)	.765	(19.4)
07	1,2	08	.344	(8.7)	.562	(14.3)	7/8 -20	1.063	(27.0)	.845	(21.5)	.890	(22.6)
08	3	08	.387	(9.8)	.562	(14.3)	7/8 -20	1.063	(27.0)	.845	(21.5)	.890	(22.6)
09	1, 2	10	.375	(9.5)	.625	(15.9)	1 -20	1.250	(31.8)	.970	(24.6)	1.015	(25.8)
10	3	10	.512	(13.0)	.625	(15.9)	1 -20	1.250	(31.8)	.970	(24.6)	1.015	(25.8)
11	1,2	12	.438	(11.1)	.750	(19.1)	1 3/16 -18	1.375	(34.9)	1.158	(29.4)	1.202	(30.5)
12	3	12	.575	(14.6)	.750	(19.1)	1 3/16 -18	1.375	(34.9)	1.158	(29.4)	1.202	(30.5)
13	1, 2	16	.625	(15.9)	.937	(23.8)	1 7/16 -18	1.625	(41.3)	1.408	(35.8)	1.452	(36.9)
14	3	16	.625	(15.9)	.937	(23.8)	1 7/16 -18	1.625	(41.3)	1.408	(35.8)	1.452	(36.9)
15	1,2	20	.875	(22.2)	1.250	(31.8)	1 3/4 -18	2.000	(50.8)	1.720	(43.7)	1.765	(44.8)
16	3	20	.875	(22.2)	1.250	(31.8)	1 3/4 -18	2.000	(50.8)	1.720	(43.7)	1.765	(44.8)
17	1, 2	24	1.000	(25.4)	1.375	(34.9)	2 -18	2.188	(55.6)	1.970	(50.0)	2.015	(51.2)
18	3	24	1.000	(25.4)	1.375	(34.9)	2 -18	2.188	(55.6)	1.970	(50.0)	2.015	(51.2)
19	1,2	28	1.250	(31.8)	1.625	(41.3)	2 1/4 -16	2.438	(61.9)	2.220	(56.4)	2.265	(57.5)
20	3	28	1.250	(31.8)	1.625	(41.3)	2 1/4 -16	2.438	(61.9)	2.220	(56.4)	2.265	(57.5)
21	1, 2	32	1.437	(36.5)	1.875	(47.6)	2 1/2 -16	2.813	(71.5)	2.470	(62.7)	2.515	(63.9)
22	3	32	1.437	(36.5)	1.875	(47.6)	2 1/2 -16	2.813	(71.5)	2.470	(62.7)	2.515	(63.9)
23	1,2	40	1.875	(47.6)	2.375	(60.3)	3 -16	3.375	(85.7)	2.970	(75.4)	3.015	(76.6)
24	3	40	1.875	(47.6)	2.375	(60.3)	3 -16	3.375	(85.7)	2.970	(75.4)	3.015	(76.6)

TABLE III: (Continued from Above)

Dash No.	Style	E Max		F Max		G Max		H Max		J Max		Length Max	
01	1, 2	---	---	---	---	.760	(19.3)	.843	(21.4)	.630	(16.0)	1.281	(32.5)
02	3	---	---	---	---	.760	(19.3)	.843	(21.4)	.630	(16.0)	1.969	(50.0)
03	1,2	.780	(19.8)	.957	(24.3)	.760	(19.3)	.906	(23.0)	.755	(19.2)	1.281	(32.5)
04	3	.780	(19.8)	.957	(24.3)	.760	(19.3)	.906	(23.0)	.755	(19.2)	1.969	(50.0)
05	1, 2	.780	(19.8)	1.145	(29.1)	.760	(19.3)	1.093	(27.8)	.942	(23.9)	1.281	(32.5)
06	3	.780	(19.8)	1.145	(29.1)	.760	(19.3)	1.093	(27.8)	.942	(23.9)	1.969	(50.0)
07	1,2	.780	(19.8)	1.332	(33.8)	.760	(19.3)	1.187	(30.1)	1.067	(27.1)	1.281	(32.5)
08	3	.780	(19.8)	1.332	(33.8)	.760	(19.3)	1.187	(30.1)	1.067	(27.1)	1.969	(50.0)
09	1, 2	.780	(19.8)	1.332	(33.8)	.760	(19.3)	1.281	(32.5)	1.192	(30.3)	1.281	(32.5)
10	3	.780	(19.8)	1.332	(33.8)	.760	(19.3)	1.281	(32.5)	1.192	(30.3)	1.969	(50.0)
11	1,2	.811	(20.6)	1.551	(39.4)	.760	(19.3)	1.500	(38.1)	1.380	(35.1)	1.344	(34.1)
12	3	.811	(20.6)	1.551	(39.4)	.760	(19.3)	1.500	(38.1)	1.380	(35.1)	1.969	(50.0)
13	1, 2	.905	(23.0)	1.770	(45.0)	1.073	(27.3)	1.719	(43.7)	1.535	(39.0)	1.344	(34.1)
14	3	.905	(23.0)	1.770	(45.0)	1.073	(27.3)	1.719	(43.7)	1.535	(39.0)	1.969	(50.0)
15	1,2	1.062	(27.0)	2.113	(53.7)	1.323	(33.6)	2.062	(52.4)	1.848	(46.9)	1.344	(34.1)
16	3	1.092	(27.7)	2.113	(53.7)	1.323	(33.6)	2.062	(52.4)	1.848	(46.9)	2.062	(52.4)
17	1, 2	1.124	(28.5)	2.363	(60.0)	1.323	(33.6)	2.312	(58.7)	2.255	(57.3)	1.406	(35.7)
18	3	1.124	(28.5)	2.363	(60.0)	1.323	(33.6)	2.312	(58.7)	2.255	(57.3)	2.062	(52.4)
19	1,2	1.399	(35.5)	2.770	(70.4)	1.572	(39.9)	2.719	(69.1)	2.505	(63.6)	1.406	(35.7)
20	3	1.399	(35.5)	2.770	(70.4)	1.572	(39.9)	2.719	(69.1)	2.505	(63.6)	2.062	(52.4)
21	1, 2	1.399	(35.5)	3.020	(76.7)	1.572	(39.9)	2.969	(75.4)	2.755	(70.0)	1.406	(35.7)
22	3	1.399	(35.5)	3.020	(76.7)	1.572	(39.9)	2.969	(75.4)	2.755	(70.0)	2.375	(60.3)
23	1,2	---	---	---	---	1.572	(39.9)	3.531	(89.7)	3.255	(82.7)	1.531	(38.9)
24	3	---	---	---	---	1.572	(39.9)	3.531	(89.7)	3.255	(82.7)	2.375	(60.3)

© 2013 Glenair, Inc.

630-008
Square Flange Feed-Through Fittings
RFI/EMI Environmental

Product Series	Fitting Type	Basic Part Number	Finish	Dash Number	Fitting Style	Strain Relief Style
630	A	008	NF	06	2	A

Fitting Type
A - Rear Mount
B - Front Mount

Finish
See Table II, Page D-3

Dash Number
See Table III

Strain Relief Style
G or F

Fitting Style
1 - RFI/EMI Only
2 - RFI/EMI Environmental

For Strain Relief Styles G and F

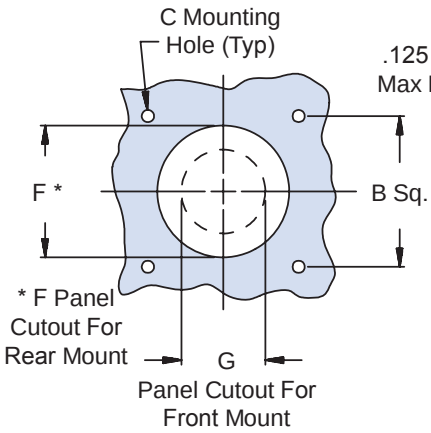

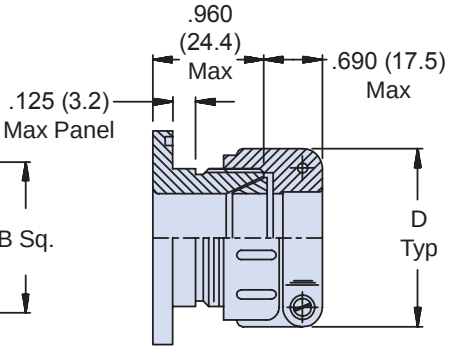

Style 1
Rear Mount Type A
RFI/EMI
(Shown With Style F Strain Relief)

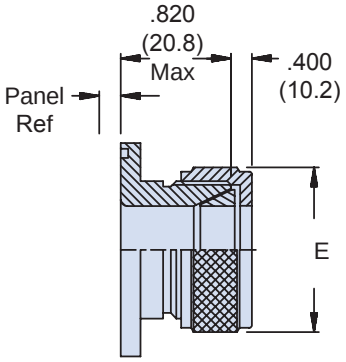

Style 1
Front Mount Type B
RFI/EMI
(Shown With Style G Gland Nut)

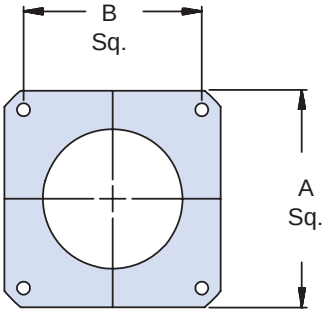

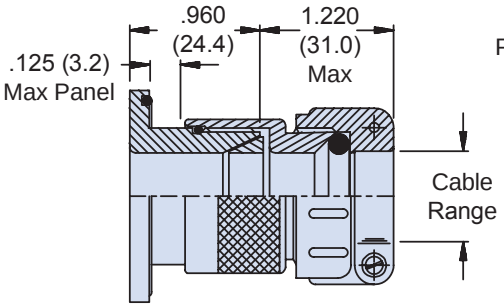

Style 2

Rear Mount Type A
RFI/EMI Environmental
(Shown With Style F Strain Relief)

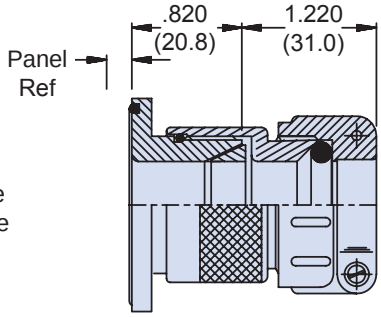

Style 2
Front Mount Type A
RFI/EMI Environmental
(Shown With Style F Strain Relief)

© 2013 Glenair, Inc. CAGE Code 06324 Printed in U.S.A.

TABLE III: Dash Number, Cable Range and Dimensions (Continued Below)

Dash No.	Cable Range Min		Cable Range Max		A Max		B Dim		C +.015 - 0	(+0.4) (-0.0)
01	.125	(3.2)	.250	(6.4)	.885	(22.5)	.593	(15.1)	.120	(3.0)
02	.156	(4.0)	.375	(9.5)	1.104	(28.0)	.812	(20.6)	.120	(3.0)
03	.250	(6.4)	.438	(11.1)	1.197	(30.4)	.906	(23.0)	.120	(3.0)
04	.280	(7.1)	.500	(12.7)	1.291	(32.8)	.968	(24.6)	.120	(3.0)
05	.375	(9.5)	.625	(15.9)	1.385	(35.2)	1.062	(27.0)	.120	(3.0)
06	.500	(12.7)	.750	(19.1)	1.635	(41.5)	1.250	(31.8)	.120	(3.0)
07	.625	(15.9)	.875	(22.2)	1.760	(44.7)	1.375	(34.9)	.147	(3.7)
08	.750	(19.1)	1.000	(25.4)	2.010	(51.1)	1.562	(39.7)	.147	(3.7)
09	.875	(22.2)	1.125	(28.6)	2.260	(57.4)	1.750	(44.5)	.173	(4.4)
10	1.000	(25.4)	1.250	(31.8)	2.510	(63.8)	1.938	(49.2)	.173	(4.4)

TABLE III: (Continued from Above)

Dash No.	D Max		E Max		F +.015 - 0	(+0.4) (-0.0)	G +.031 - 0	(+0.8) (-0.0)
01	.843	(21.4)	.625	(15.9)	.515	(13.1)	.250	(6.4)
02	.968	(24.6)	.750	(19.1)	.640	(16.3)	.375	(9.5)
03	1.046	(26.6)	.875	(22.2)	.765	(19.4)	.438	(11.1)
04	1.156	(29.4)	1.000	(25.4)	.890	(22.6)	.500	(12.7)
05	1.218	(30.9)	1.125	(28.6)	1.015	(25.8)	.625	(15.9)
06	1.343	(34.1)	1.250	(31.8)	1.140	(29.0)	.750	(19.1)
07	1.468	(37.3)	1.375	(34.9)	1.265	(32.1)	.875	(22.2)
08	1.593	(40.5)	1.500	(38.1)	1.390	(35.3)	1.000	(25.4)
09	1.718	(43.6)	1.625	(41.3)	1.515	(38.5)	1.125	(28.6)
10	1.843	(46.8)	1.750	(44.5)	1.640	(41.7)	1.250	(31.8)

APPLICATION NOTES

1. Assembly identified with manufacturer's name and part number, space permitting.
2. Cable range is defined as the accommodations range for the wire bundle or cable. Dimensions shown are not intended for inspection criteria.
3. Material / Finish: See Table II.
4. Metric dimensions (mm) are indicated in parentheses.

© 2013 Glenair, Inc.

GLENAIR, INC. • 1211 AIR WAY • GLENDALE, CA 91201-2497 • 818-247-6000 • FAX 818-500-9912
www.glenair.com
E-Mail: sales@glenair.com

630-015
Fiber Optic Bulkhead Feed-Through Adapter
Cable with Kevlar

Basic Part Number

630-015

Dash Number *(See Table I)*

NF - 01 T

Finish *(See Table II)*

Shield Nut Option
*Supplied with 447-822*** Shield Nut instead of Jam Nut*
Omit Symbol "T" for part with Jam Nut

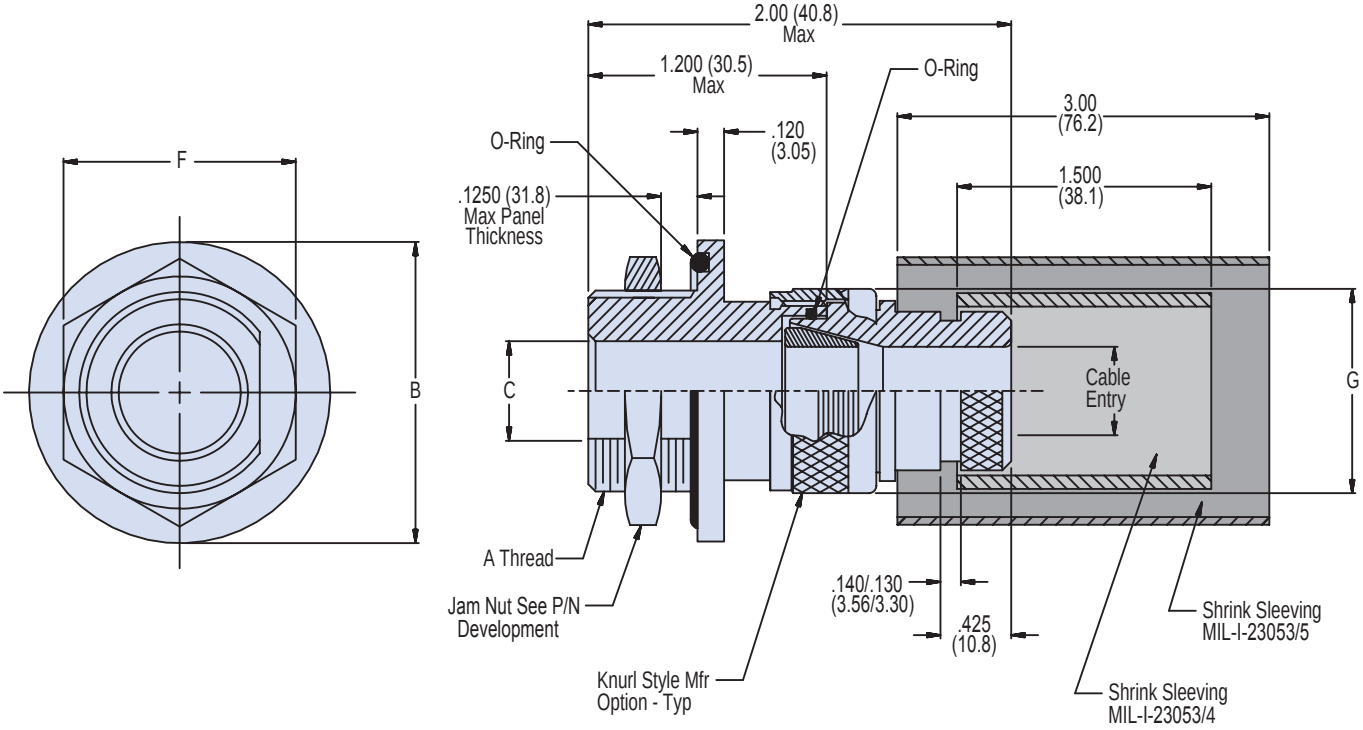

TABLE I: Dash Number and Dimensions

Dash No.	A Thread Class 2A	B Max	C +.010 (0.25) -.0	D +.010 (0.25) -.0	E +.010 (0.25) -.0	F	G Max	H Min	Max Cable Entry	MIL-I-23053 Shrink Sleeve	MIL-I-23053 Shrink Sleeve	Braid Sock 103-005-005 Ref
01	3/4-20 UNEF	1.140 (29.0)	.340 (8.6)	.755 (19.2)	.691 (17.6)	.938 (23.8)	1.004 (25.5)	6.0	.335 (8.5)	/4-204-0	/5-109-0	A10
02	3/4-20 UNEF	1.140 (29.0)	.460 (11.7)	.755 (19.2)	.691 (17.6)	.938 (23.8)	1.132 (28.8)	6.0	.455 (11.6)	/4-204-0	/5-109-0	A10
03	7/8-20 UNEF	1.280 (32.5)	.630 (16.0)	.880 (22.4)	.816 (20.7)	1.062 (27.0)	1.343 (34.1)	6.0	.625 (15.9)	/4-205-0	/5-110-0	A10
04	1 1/16-18 UNEF	1.490 (37.8)	.755 (19.2)	1.067 (27.1)	1.004 (25.5)	1.250 (31.8)	1.468 (37.3)	6.0	.750 (19.1)	/4-206-0	/5-110-0	A14
05	1 3/16-18 UNEF	1.640 (41.7)	.880 (22.4)	1.192 (30.3)	1.130 (28.7)	1.375 (34.9)	1.593 (40.5)	6.0	.875 (22.2)	/4-506-0	/5-111-0	A16
06	1 5/16-18 UNEF	1.930 (49.0)	1.005 (25.5)	1.137 (28.9)	1.254 (31.9)	1.625 (41.3)	1.656 (42.1)	6.0	1.000 (25.4)	/4-305-0	/5-111-0	A18

© 2013 Glenair, Inc. CAGE Code 06324 Printed in U.S.A.

630-015
Fiber Optic Bulkhead Feed-Through Adapter
Cable with Kevlar

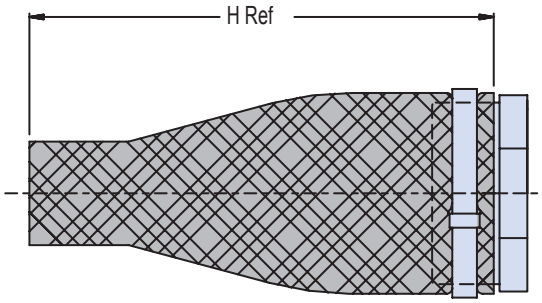

447-822* ASSEMBLY**
Style T see P/N Development

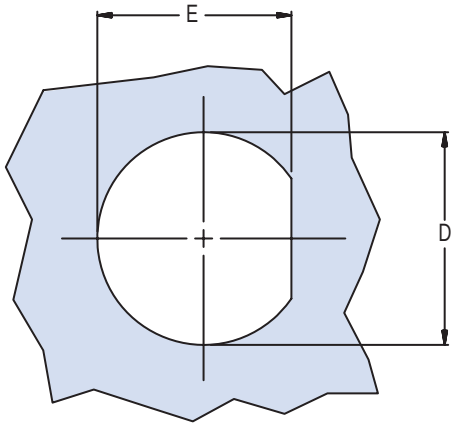

RECOMMENDED PANEL CUT-OUT

TABLE I: Finish

Symbol	Description
B	Cadmium Plate/Olive Drab
M	Electroless Nickel
N	Cadmium Plate/Olive Drab over Nickel
NF	Cad/O.D. over Electroless Nickel (1,000 Hr. Salt Spray

APPLICATION NOTES

1. Assembly identified with manufacurer's code identification number (Glenair, part number and classification code 490).
2. Glenair series 600 backshell assembly tools are recommended for assembly and installation.
3. Material / Finish:
   Adapters, Jam Nut, Ferrule, Coupling Nut - Al alloy/see Table I.
   Hardware - 316 SST/passivate.
   Seals and gaskets - Silicone/N.A.
   Mounting Plate - 300 series SST/passivate.
4. MIL-T-23053/4 & /5 shrink sleeving to be packaged loose in a plastic bag.
5. Metric dimensions (mm) are indicated in parentheses.

© 2013 Glenair, Inc. CAGE Code 06324 Printed in U.S.A.

630-022
Feed-Through Fittings
Banding Adapter RFI/EMI Environmental

Product Series	Fitting Type	Basic Part Number	Finish	Dash Number	Termination Area	Termination Band	Shrink Boot
630	A	022	NF	16	B	P	T

Fitting Type
A - Rear Mount
B - Front Mount
C - Flange Mount

Finish
See Table II, Page D-3

Dash Number
See Table III

Termination Area
Polysulfide Stripes
(Omit for None)

Termination Band
B - Band
K - Precoiled Band
(Omit for None)

Shrink Boot
Table V
(Omit for None)

RFI/EMI Environmental with External Banding Porch

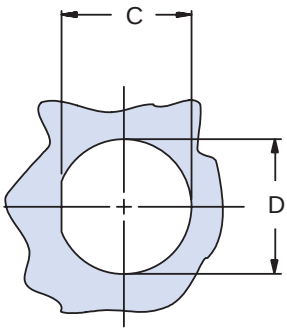

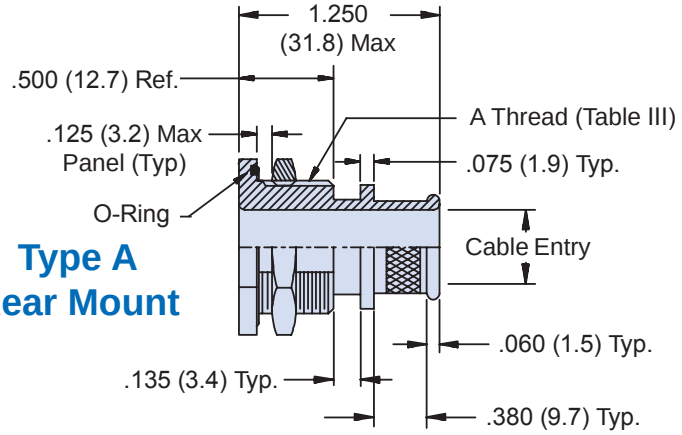

Type A Rear Mount

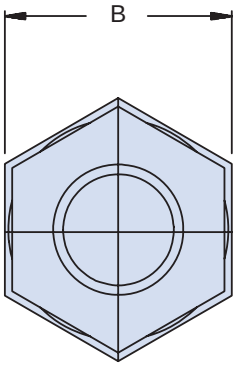

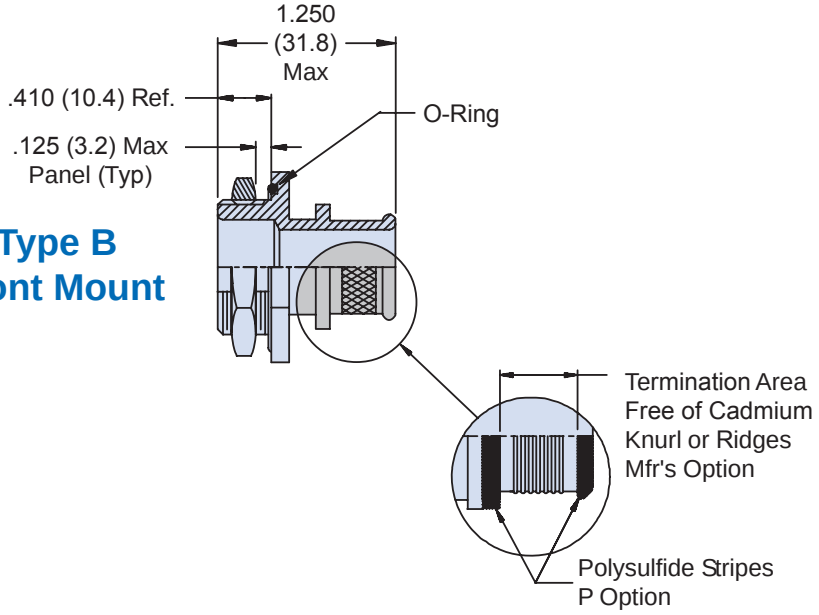

Type B Front Mount

© 2013 Glenair, Inc.

GLENAIR, INC. • 1211 AIR WAY • GLENDALE, CA 91201-2497 • 818-247-6000 • FAX 818-500-9912
www.glenair.com
E-Mail: sales@glenair.com

630-022
Feed-Through Fittings
Banding Adapter RFI/EMI Environmental

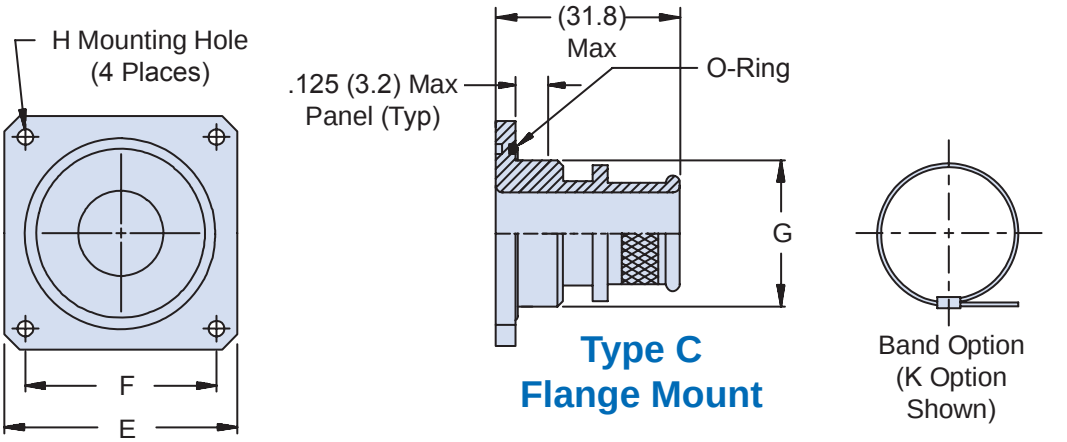

TABLE III: Dash Number, Cable Range and Dimensions

No.	Cable Entry Dia	A Thread Unified	B Dim	C Flat ± .010 (± .3)	D Dia ± .010 (± .3)	E Sq ± .031 (± .8)	F Dim.	□ Dia □.00□ (□.1) □.01□ (□.□
03	.188 (4.8)	1/2 -28	.688 (17.5)	.480 (12.2)	.515 (13.1)	.875 (22.2)	.594 (15.1)	.500 (12.7)
04	.250 (6.4)	1/2 -28	.688 (17.5)	.480 (12.2)	.515 (13.1)	.875 (22.2)	.594 (15.1)	.500 (12.7)
05	.313 (8.0)	5/8 -24	.813 (20.7)	.605 (15.4)	.640 (16.3)	1.000 (25.4)	.719 (18.3)	.625 (15.9)
06	.375 (9.5)	5/8 -24	.813 (20.7)	.605 (15.4)	.640 (16.3)	1.000 (25.4)	.719 (18.3)	.625 (15.9)
07	.438 (11.1)	3/4 -20	.938 (23.8)	.730 (18.5)	.765 (19.4)	1.094 (27.8)	.812 (20.6)	.750 (19.1)
08	.500 (12.7)	3/4 -20	.938 (23.8)	.730 (18.5)	.765 (19.4)	1.094 (27.8)	.812 (20.6)	.750 (19.1)
09	.563 (14.3)	7/8 -20	1.063 (27.0)	.855 (21.7)	.890 (22.6)	1.188 (30.2)	.906 (23.0)	.875 (22.2)
10	.625 (15.9)	7/8 -20	1.063 (27.0)	.855 (21.7)	.890 (22.6)	1.188 (30.2)	.906 (23.0)	.875 (22.2)
11	.688 (17.5)	1 -20	1.188 (30.2)	.980 (24.9)	1.015 (25.8)	1.281 (32.5)	.969 (24.6)	1.000 (25.4)
12	.750 (19.1)	1 -20	1.188 (30.2)	.980 (24.9)	1.015 (25.8)	1.281 (32.5)	.969 (24.6)	1.000 (25.4)
13	.813 (20.7)	1 1/8 -18	1.313 (33.4)	1.105 (28.1)	1.140 (29.0)	1.375 (34.9)	1.062 (27.0)	1.125 (28.6)
14	.875 (22.2)	1 1/4 -18	1.438 (36.5)	1.230 (31.2)	1.265 (32.1)	1.500 (38.1)	1.156 (29.4)	1.250 (31.8)
15	.938 (23.8)	1 1/4 -18	1.438 (36.5)	1.230 (31.2)	1.265 (32.1)	1.500 (38.1)	1.156 (29.4)	1.250 (31.8)
16	1.000 (25.4)	1 3/8 -18	1.563 (39.7)	1.355 (34.4)	1.390 (35.3)	1.625 (41.3)	1.250 (31.8)	1.375 (34.9)
17	1.063 (27.0)	1 3/8 -18	1.563 (39.7)	1.355 (34.4)	1.390 (35.3)	1.625 (41.3)	1.250 (31.8)	1.375 (34.9)
18	1.125 (28.6)	1 1/2 -18	1.688 (42.9)	1.480 (37.6)	1.515 (38.5)	1.750 (44.5)	1.375 (34.9)	1.500 (38.1)
19	1.188 (30.2)	1 1/2 -18	1.688 (42.9)	1.480 (37.6)	1.515 (38.5)	1.750 (44.5)	1.375 (34.9)	1.500 (38.1)
20	1.250 (31.8)	1 5/8 -18	1.813 (46.1)	1.605 (40.8)	1.640 (41.7)	1.812 (46.0)	1.500 (38.1)	1.625 (41.3)
22	1.375 (34.9)	1 3/4 -18	1.938 (49.2)	1.730 (43.9)	1.765 (44.8)	2.000 (50.8)	1.562 (39.7)	1.750 (44.5)
24	1.500 (38.1)	2 -18	2.188 (55.6)	1.980 (50.3)	2.015 (51.2)	2.250 (57.2)	1.750 (44.5)	2.000 (50.8)
26	1.625 (41.3)	2 -18	2.188 (55.6)	1.980 (50.3)	2.015 (51.2)	2.250 (57.2)	1.750 (44.5)	2.000 (50.8)
28	1.750 (44.5)	2 1/4 -16	2.438 (61.9)	2.230 (56.6)	2.265 (57.5)	2.500 (63.5)	1.938 (49.2)	2.250 (57.2)

TABLE IV

Dash Nos.	H Dia + .015 - .000	(+ .4) (- .0)
03-17	.125	(3.2)
18-20	.156	(4.0)
22-28	.188	(4.8)

TABLE V: SHRINK BOOT

Dash No.	Shrink Boot (Note 4)
03	770-003S111
04-06	770-003S112
07-11	770-001S104
12-15	770-001S105
16-17	770-001S106
18-22	770-001S107
24-28	770-001S108

APPLICATION NOTES

1. Assembly identified with manufacturer's name and part number, space permitting.
2. Cable range is defined as the accommodations range for the wire bundle or cable. Dimensions shown are not intended for inspection criteria.
3. Material / Finish: See Table II.
4. Glenair shrink boot supplied with "T" option (see P/N development)
5. Metric dimensions (mm) are indicated in parentheses.

© 2013 Glenair, Inc. CAGE Code 06324 Printed in U.S.A.

630-030
Composite Thru-Box, Panel and Bulkhead
RFI/EMI/Environmental Banding Adapter

Product Series
630 - Bulkhead Feed-Thru

Basic Part Number

Entry Code
(See Table I)

Polysulfide
(Omit for None)

630	A	030	XM	16	B	P	T

Fitting Type
A - Rear Mount
B - Front Mount
C - Flange Mount

Finish Symbol
(See Table II)

Band Option
B - Band
K - Pre-Coiled Band
(Omit for None)

Shrink Boot
770-001 Shrink Boot
Supplied with T Option

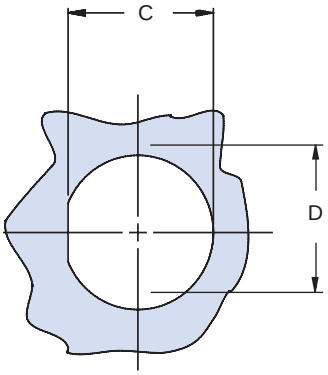

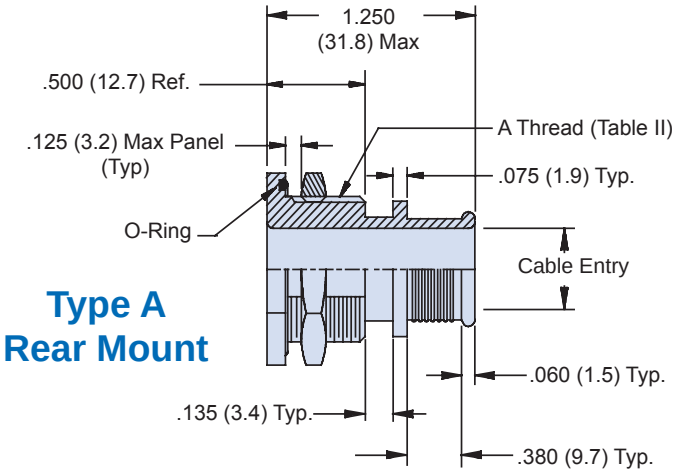

Type A
Rear Mount

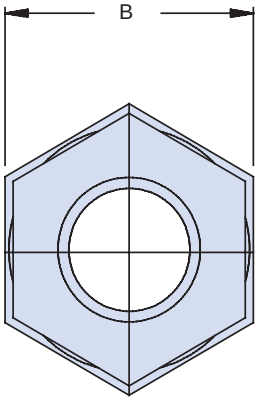

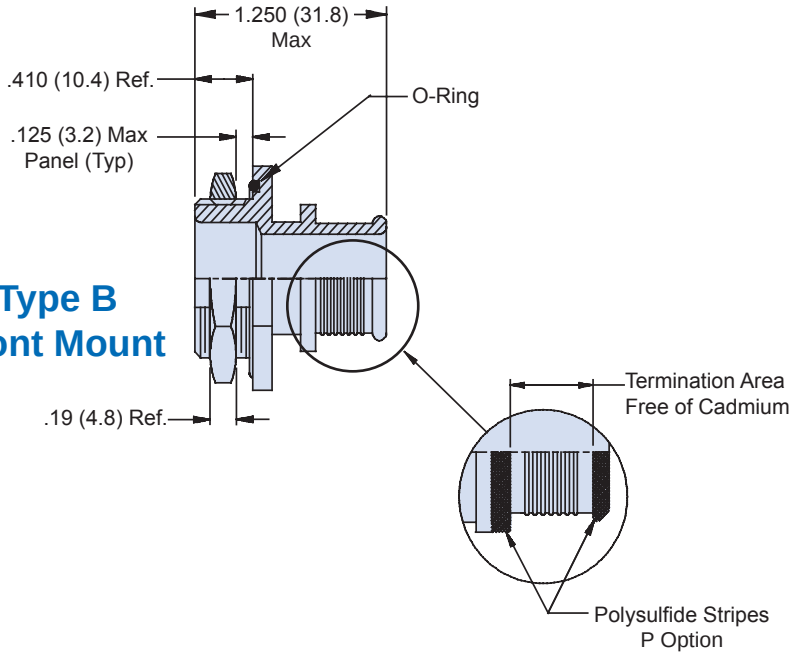

Type B
Front Mount

© 2013 Glenair, Inc.

GLENAIR, INC. • 1211 AIR WAY • GLENDALE, CA 91201-2497 • 818-247-6000 • FAX 818-500-9912
www.glenair.com
E-Mail: sales@glenair.com

630-030
Composite Thru-Box, Panel and Bulkhead
RFI/EMI/Environmental Banding Adapter

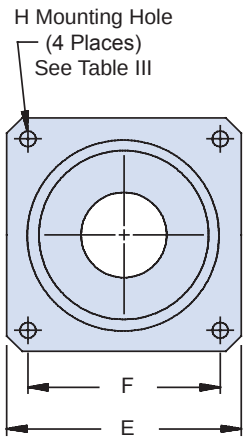

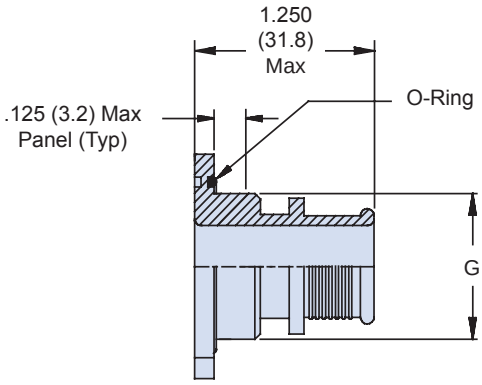

Type C
Flange Mount

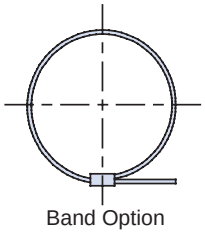

Band Option
(K Option Shown)

TABLE I: CABLE ENTRY

Entry Code	Cable Entry Dia	A Thread Unified	B Dim	C Flat ± .010 (± .3)	D Dia ± .010 (± .3)	E Sq ± .031 (± .8)	F Dim.	G Dia + .005 (+ .1) - .015 (- .4)
03	.188 (4.8)	1/2 -28	.688 (17.5)	.480 (12.2)	.515 (13.1)	.875 (22.2)	.594 (15.1)	.500 (12.7)
04	.250 (6.4)	1/2 -28	.688 (17.5)	.480 (12.2)	.515 (13.1)	.875 (22.2)	.594 (15.1)	.500 (12.7)
05	.313 (8.0)	5/8 -24	.813 (20.7)	.605 (15.4)	.640 (16.3)	1.000 (25.4)	.719 (18.3)	.625 (15.9)
06	.375 (9.5)	5/8 -24	.813 (20.7)	.605 (15.4)	.640 (16.3)	1.000 (25.4)	.719 (18.3)	.625 (15.9)
07	.438 (11.1)	3/4 -20	.938 (23.8)	.730 (18.5)	.765 (19.4)	1.094 (27.8)	.812 (20.6)	.750 (19.1)
08	.500 (12.7)	3/4 -20	.938 (23.8)	.730 (18.5)	.765 (19.4)	1.094 (27.8)	.812 (20.6)	.750 (19.1)
09	.563 (14.3)	7/8 -20	1.063 (27.0)	.855 (21.7)	.890 (22.6)	1.188 (30.2)	.906 (23.0)	.875 (22.2)
10	.625 (15.9)	7/8 -20	1.063 (27.0)	.855 (21.7)	.890 (22.6)	1.188 (30.2)	.906 (23.0)	.875 (22.2)
11	.688 (17.5)	1 -20	1.188 (30.2)	.980 (24.9)	1.015 (25.8)	1.281 (32.5)	.969 (24.6)	1.000 (25.4)
12	.750 (19.1)	1 -20	1.188 (30.2)	.980 (24.9)	1.015 (25.8)	1.281 (32.5)	.969 (24.6)	1.000 (25.4)
13	.813 (20.7)	1 1/8 -18	1.313 (33.4)	1.105 (28.1)	1.140 (29.0)	1.375 (34.9)	1.062 (27.0)	1.125 (28.6)
14	.875 (22.2)	1 1/4 -18	1.438 (36.5)	1.230 (31.2)	1.265 (32.1)	1.500 (38.1)	1.156 (29.4)	1.250 (31.8)
15	.938 (23.8)	1 1/4 -18	1.438 (36.5)	1.230 (31.2)	1.265 (32.1)	1.500 (38.1)	1.156 (29.4)	1.250 (31.8)
16	1.000 (25.4)	1 3/8 -18	1.563 (39.7)	1.355 (34.4)	1.390 (35.3)	1.625 (41.3)	1.250 (31.8)	1.375 (34.9)
17	1.063 (27.0)	1 3/8 -18	1.563 (39.7)	1.355 (34.4)	1.390 (35.3)	1.625 (41.3)	1.250 (31.8)	1.375 (34.9)
18	1.125 (28.6)	1 1/2 -18	1.688 (42.9)	1.480 (37.6)	1.515 (38.5)	1.750 (44.5)	1.375 (34.9)	1.500 (38.1)
19	1.188 (30.2)	1 1/2 -18	1.688 (42.9)	1.480 (37.6)	1.515 (38.5)	1.750 (44.5)	1.375 (34.9)	1.500 (38.1)
20	1.250 (31.8)	1 5/8 -18	1.813 (46.1)	1.605 (40.8)	1.640 (41.7)	1.812 (46.0)	1.500 (38.1)	1.625 (41.3)
22	1.375 (34.9)	1 3/4 -18	1.938 (49.2)	1.730 (43.9)	1.765 (44.8)	2.000 (50.8)	1.562 (39.7)	1.750 (44.5)
24	1.500 (38.1)	2 -18	2.188 (55.6)	1.980 (50.3)	2.015 (51.2)	2.250 (57.2)	1.750 (44.5)	2.000 (50.8)
26	1.625 (41.3)	2 -18	2.188 (55.6)	1.980 (50.3)	2.015 (51.2)	2.250 (57.2)	1.750 (44.5)	2.000 (50.8)
28	1.750 (44.5)	2 1/4 -16	2.438 (61.9)	2.230 (56.6)	2.265 (57.5)	2.500 (63.5)	1.938 (49.2)	2.250 (57.2)

TABLE II

Symbol	Finish Description
XM	2000 Hour Corrosion Resistant Electroless Nickel
XMT	2000 Hour Corrosion Resistant Ni-PTFE, Nickel-Fluorocarbon Polymer. *1000 Hour Grey™*
XW	2000 Hour Corrosion Resistant Cadmium/Olive Drab over Electroless Nickel

TABLE III: MOUNTING

Dash Nos.	H Dia + .015 - .000	(+ .4) (- .0)
03-17	.125	(3.2)
18-20	.156	(4.0)
22-28	.188	(4.8)

APPLICATION NOTES

1. Metric dimensions (mm) are in parentheses and are for reference only
2. Consult factory for shrink boot to be supplied with part.

© 2013 Glenair, Inc. CAGE Code 06324 Printed in U.S.A.

GLENAIR, INC. • 1211 AIR WAY • GLENDALE, CA 91201-2497 • 818-247-6000 • FAX 818-500-9912
www.glenair.com E-Mail: sales@glenair.com

630-031
Composite RFI/EMI Environmental Feed-Through
Jam-Nut Mount Accessory Adapter

For Use With MIL-DTL-38999 Series III and IV Accessory Threads (Glenair Code H)

Product Series	Angular Function	Basic Part Number	Finish	Dash Number	Dash Number
	S - Straight		*See Table I*	*See Table II*	*See Table III*
630	S	031	XM	04	17

APPLICATION NOTES

1. MIL-DTL-38999 Series III and IV accessory interface, Glenair Code H.
2. Metric dimensions (mm) are indicated in parentheses.

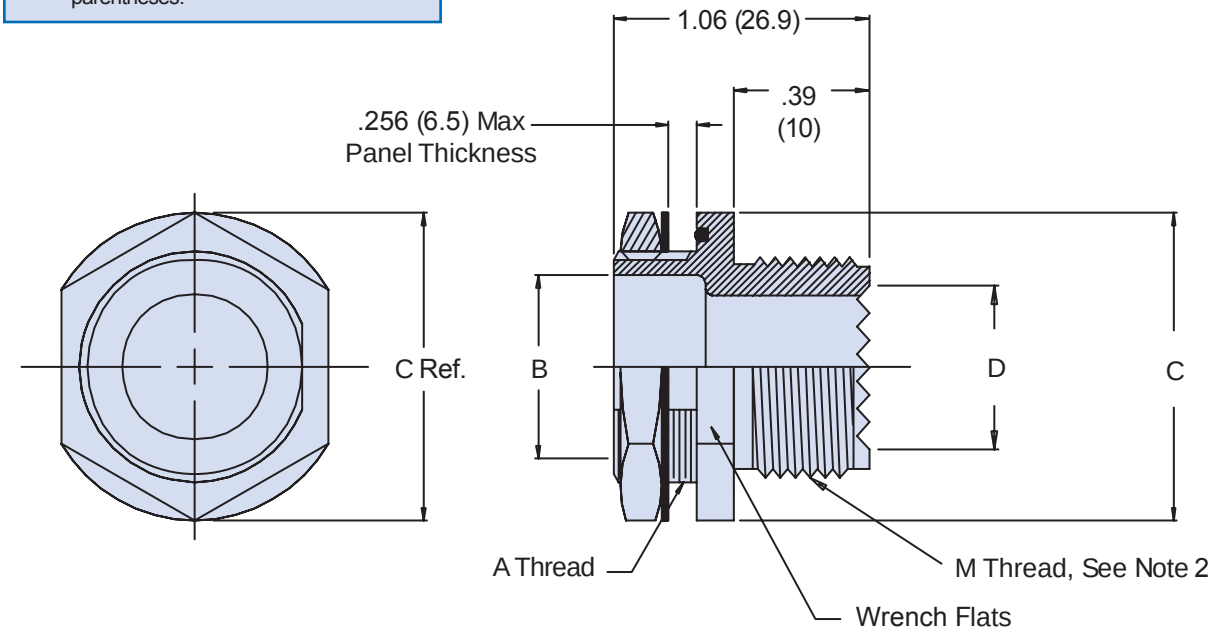

TABLE I: Finish

XM	Electroless Nickel
XW	Cadmium Olive Drab Over Electroless Nickel

TABLE II: Dash Number, Max Entry

Dash No.	A Thread ISO Metric	B Dia. Min.		C Max.		Max Entry Table III
01	M 16 x 1.5-6g	.394	(10.0)	1.024	(26.0)	11
02	M 20 x 1.5-6g	.551	(14.0)	1.181	(30.0)	13
03	M 27 x 2.0-6g	.866	(22.0)	1.496	(38.0)	21
04	M 36 x 2.0-6g	1.181	(30.0)	1.850	(47.0)	25

TABLE III: Dash Number

Dash No.	M Thread ISO Metric	D Min	
09	M 12 x 1.0-6g	.250	(6.4)
11	M 15 x 1.0-6g	.375	(9.5)
13	M 18 x 1.0-6g	.500	(12.7)
15	M 22 x 1.0-6g	.625	(15.9)
17	M 25 x 1.0-6g	.750	(19.1)
19	M 28 x 1.0-6g	.812	(20.6)
21	M 31 x 1.0-6g	.938	(23.8)
23	M 34 x 1.0-6g	1.062	(27.0)
25	M 37 x 1.0-6g	1.188	(30.2)

© 2013 Glenair, Inc. CAGE Code 06324 Printed in U.S.A.

637-062
Composite Shrink Boot Feed-Through Adapter
Jam Nut Mount Environmental

Glenair®

Product Series	Angular Function	Basic Part Number	Finish	Dash Number	Less Shrink Boot	Dash Number
	S - Straight		*See Table I*	*See Table II*	*Omit for Boot*	*See Table III*
637	S	062	XM	04	06	L

APPLICATION NOTES

1. Consult factory for shrink boot to be supplied with product.
2. Metric dimensions (mm) are indicated in parentheses.

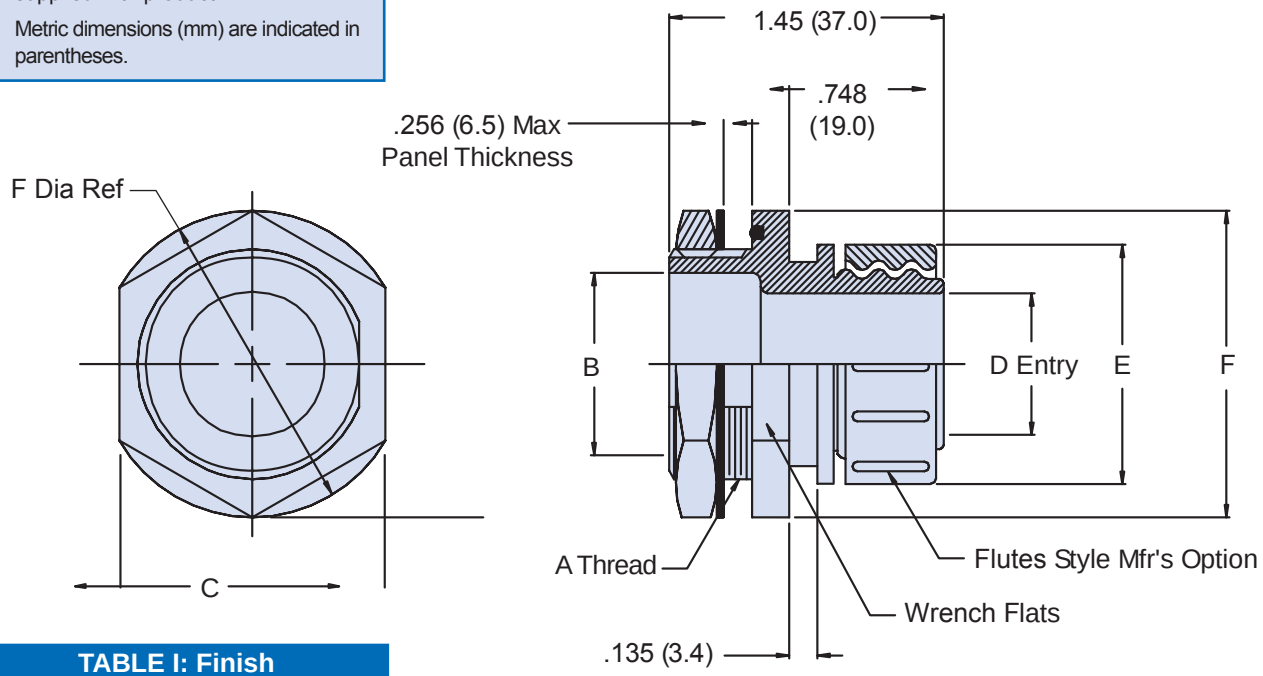

TABLE I: Finish

XM	Electroless Nickel
XW	Cadmium Olive Drab Over Electroless Nickel

TABLE II: Dash Number, Max Entry

Dash No.	A Thread ISO Metric	B Dia Min	C Max	F Dia	Max Entry Table III
01	M 16 x 1.5-6g	.394 (10.0)	.98 (24.9)	1.10 (27.9)	03
02	M 20 x 1.5-6g	.551 (14.0)	1.18 (30.0)	1.31 (33.3)	04
03	M 27 x 2.0-6g	.866 (22.0)	1.50 (38.1)	1.63 (41.4)	07
04	M36 x 2.0-6g	1.181 (30.0)	1.97 (54.1)	2.13 (54.1)	08

TABLE III: Dash Number

Dash No.	D +.03 -.00	D (.8) (.0)	E Max	E Max
01	.125	(3.2)	.531	(13.5)
02	.250	(6.4)	.656	(16.7)
03	.375	(9.5)	.781	(19.8)
04	.500	(12.7)	.906	(23.0)
05	.625	(15.9)	1.031	(26.2)
06	.750	(19.1)	1.156	(29.4)
07	.875	(22.2)	1.281	(32.5)
08	1.000	(25.4)	1.406	(35.7)

© 2013 Glenair, Inc. CAGE Code 06324 Printed in U.S.A.

637-094
Composite Box Conduit or Cable
Feed-Through Adapter Series

Product Series
637 - Bulkhead Feed-Thru

Basic Part Number

Bulkhead Thread Size
(See Table I)

Fitting Style
1 - EMI/RFI
2 - Environmental
3 - EMI/RFI and Environmental
4 - Environmental (see note II)
5 - Conduit (PEEK)
6 - Conduit and Environmental (ETFE, FEP and PFA)
7 - Conduit and Environmental (PEEK)

637	B	094	XM	04	06	2	C	B

Fitting Type
B - Front Mount

Finish Symbol
(See Table III)

Dash Number
(See Table II)

Strain Relief Style
C - Clamp
*N - Nut**

Bushing
*B - Supplied with MS3420-**D*
(Omit for None)

**(for styles A, B and C only)*

Type B Environmental Style 2

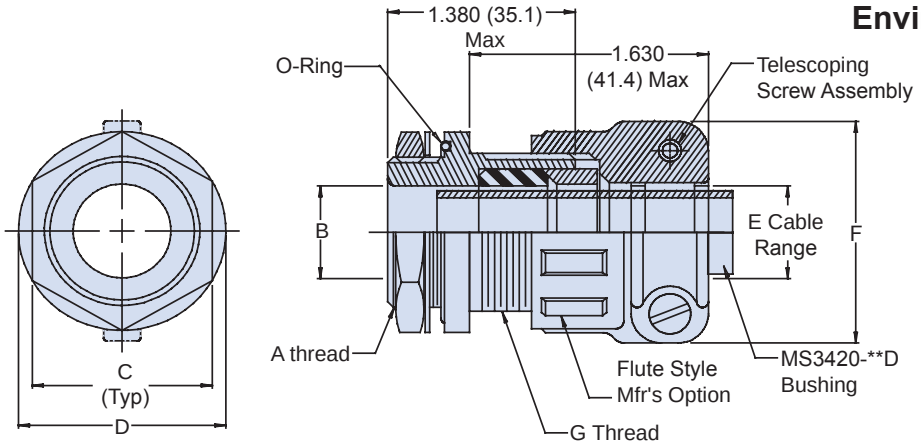

Type B Environmental Conduit Adapter Style 6 or 7

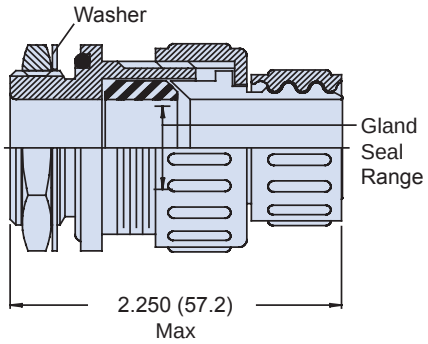

Type B RFI/EMI & Environmental Style 3

Style 1 RFI/EMI

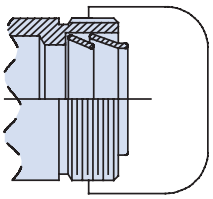

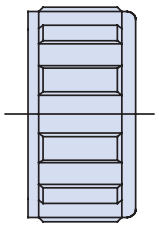

Nut

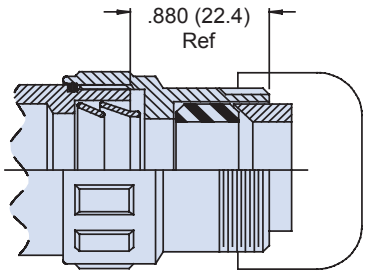

Type B Conduit Adapter Style 5

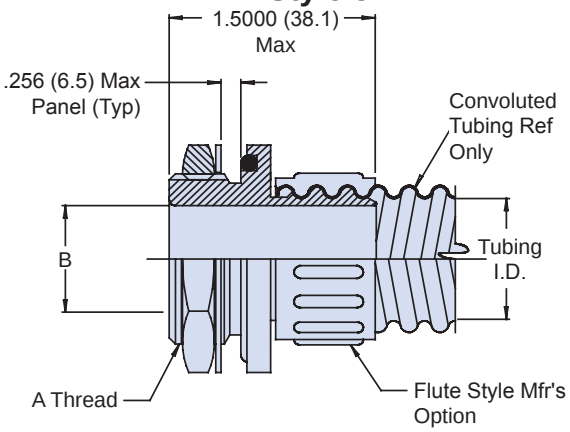

F

© 2013 Glenair, Inc.
CAGE Code 06324
Printed in U.S.A.

TABLE I: BULKHEAD THREAD SIZE

Dash No.	A Thread ISO Metric	B Ref Diameter	C	D Max Diameter	Max Entry Table II
01	M16 x 1.5-6g	.55 (14.0)	.875 (22.2)	1.06 (27.2)	06
02	M20 x 1.5-6g	.61 (15.5)	1.062 (27.0)	1.19 (30.5)	10
03	M27 x 2.0-6g	.86 (21.8)	1.375 (34.9)	1.50 (38.4)	16
04	M36 x 2.0-6g	1.21 (30.7)	1.750 (44.5)	2.00 (51.1)	20
05	1 -20 UNEF-2A	.78 (19.8)	1.250 (31.8)	1.38 (35.3)	12

TABLE II: CONNECTOR SHELL SIZE ORDER NUMBER

Dash No.	E Min	E Max	F Max	G Thread Unified Class 2A	MS3420-**D	Ref. Conduit Size Styles 5, 6 & 7
04	.188 (4.8)	.312 (7.9)	1.150 (29.2)	11/16-24	-04	14
06	.291 (7.1)	.438 (11.1)	1.270 (32.3)	13/16-20	-06	16
10	.375 (9.5)	.610 (15.5)	1.460 (37.1)	1 1/16-18	-06 & -10	24
12	.438 (11.1)	.750 (19.1)	1.620 (41.1)	1 1/4-18	-08 & -12	28
16	.625 (15.9)	.860 (21.8)	1.770 (44.9)	1 1/2-18	-12 & -16	32
20	.875 (22.2)	1.210 (30.7)	2.060 (52.3)	1 13/16-16	-16 & -20	40

TABLE III

Symbol	Finish Description
XB	No Plating - Black Color (Non-Conductive Finish)
XM	2000 Hour Corrosion Resistant Electroless Nickel
XMT	2000 Hour Corrosion Resistant Ni-PTFE, Nickel-Fluorocarbon Polymer. *1000 Hour Grey™*
XO	No Plating - Brown Color (Non-Conductive Finish)
XW	2000 Hour Corrosion Resistant Cadmium/Olive Drab over Electroless Nickel

© 2013 Glenair, Inc.

GLENAIR, INC. • 1211 AIR WAY • GLENDALE, CA 91201-2497 • 818-247-6000 • FAX 818-500-9912
www.glenair.com
E-Mail: sales@glenair.com

637-120
Composite Feed-Through Fitting
Universal Conduit/Cable Accessory Adapter

For Use With Conduit or Cable

Product Series — 637

Basic Part Number — 120

Fitting Style
- *A - RFI/EMI*
- *B - Environmental*
- *C - RFI/EMI & Environmental*
- *D - Conduit (ETFE, FEP & PFA)*
- *DK - Conduit (PEEK)*
- *E - Conduit & Environmental (ETFE, FEB & PFA)*
- *EK - Condit & Environmental (PEEK)*

Strain Relief
- *C - Clamp*
- *N - Nut (For Styles A, B and C Only)*

Finish — XM
See Table III

Dash Number — 06
Use Table I for Styles D & E
Use Table II for Styles A, B & C

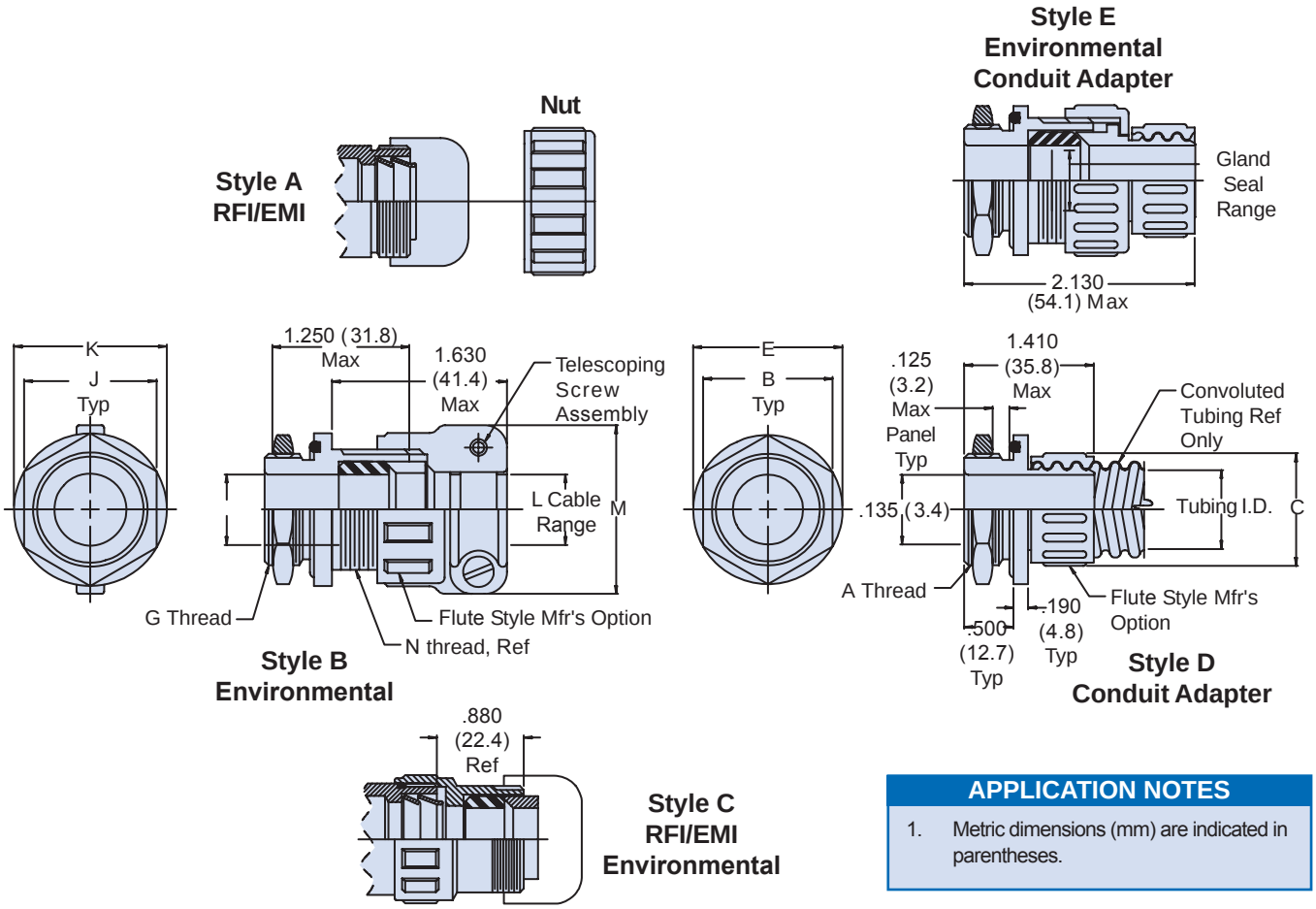

APPLICATION NOTES

1. Metric dimensions (mm) are indicated in parentheses.

© 2013 Glenair, Inc.
CAGE Code 06324
Printed in U.S.A.

637-120
Composite Feed-Through Fitting
Universal Conduit/Cable Accessory Adapter

Glenair®

TABLE I

Dash No.	A Thread Class 2A	B Across Flat	C Max	D Min	E Max	Tubing I.D. Min	Tubing I.D. Max	Gland Seal Range Min	Gland Seal Range Max
06	1/2-28 UNEF	.750 (19.1)	.500 (12.7)	.162 (4.1)	.900 (22.9)	.181 (4.6)	.187 (4.7)	.156 (4.0)	.250 (6.4)
09	1/2-28 UNEF	.750 (19.1)	.600 (15.2)	.244 (6.2)	.900 (22.9)	.273 (6.9)	.281 (7.1)	.156 (4.0)	.250 (6.4)
10	5/8-24 UNEF	.880 (22.4)	.630 (16.0)	.274 (7.0)	1.030 (26.2)	.306 (7.8)	.312 (7.9)	.156 (4.0)	.250 (6.4)
12	5/8-24 UNEF	.880 (22.4)	.700 (17.8)	.326 (8.3)	1.030 (26.2)	.364 (9.2)	.375 (9.5)	.188 (4.8)	.312 (7.9)
14	3/4-20 UNEF	1.000 (25.4)	.760 (19.3)	.382 (9.7)	1.160 (29.5)	.427 (10.8)	.437 (11.1)	.250 (6.4)	.438 (11.1)
16	3/4-20 UNEF	1.000 (25.4)	.850 (21.6)	.434 (11.0)	1.160 (29.5)	.485 (12.3)	.500 (12.7)	.250 (6.4)	.438 (11.1)
20	7/8-20 UNEF	1.130 (28.7)	.970 (24.6)	.539 (13.7)	1.280 (32.5)	.608 (15.4)	.625 (15.9)	.375 (9.5)	.625 (15.9)
24	1-20 UNEF	1.250 (31.8)	1.140 (29.0)	.649 (16.5)	1.410 (35.8)	.730 (18.5)	.750 (19.1)	.375 (9.5)	.625 (15.9)
28	1 1/8-18 UNEF	1.500 (38.1)	1.280 (32.5)	.769 (19.5)	1.530 (38.9)	.860 (21.8)	.875 (22.2)	.438 (11.1)	.750 (19.1)
32	1 3/8-18 UNEF	1.750 (44.5)	1.450 (36.8)	.868 (22.0)	1.780 (45.2)	.975 (24.8)	1.000 (25.4)	.625 (15.9)	.938 (23.8)
40	1 1/2-18 UNEF	1.880 (47.8)	1.760 (44.7)	1.078 (27.4)	1.890 (48.0)	1.210 (30.7)	1.250 (31.8)	.875 (22.2)	1.250 (31.8)
48	1 3/4-18 UNEF	2.130 (54.1)	2.060 (52.3)	1.200 (30.5)	2.280 (57.9)	1.437 (36.5)	1.500 (38.1)	1.000 (25.4)	1.375 (34.9)
56	2-18 UNS	2.380 (60.5)	2.390 (60.7)	1.400 (35.6)	2.530 (64.3)	1.688 (42.9)	1.750 (44.5)	1.250 (31.8)	1.625 (41.3)
64	2 1/4-16 UN	2.630 (66.8)	2.570 (65.3)	1.600 (40.6)	2.780 (70.6)	1.937 (49.2)	2.000 (50.8)	1.250 (31.8)	1.625 (41.3)

TABLE II

Dash No.	G Thread Class 2A	H Min	J Across Flat	K Max	L Min	L Max	M Max	N Thread Unified Class 2 A
04	5/8-24 UNEF	.362 (9.2)	.880 (22.4)	1.030 (26.2)	.188 (4.8)	.312 (7.9)	1.150 (29.2)	11/16-24
06	3/4-20 UNEF	.434 (11.0)	1.000 (25.4)	1.160 (29.5)	.281 (7.1)	.438 (12.3)	1.270 (32.3)	13/16-20
10	1-20 UNEF	.649 (16.5)	1.250 (31.8)	1.410 (35.8)	.375 (9.5)	.610 (15.5)	1.460 (37.1)	1 1/16-18
12	1 1/8-18 UNEF	.769 (19.5)	1.500 (38.1)	1.530 (38.9)	.438 (12.3)	.750 (19.1)	1.620 (41.1)	1 1/4-18
16	1 3/8-18 UNEF	.868 (22.0)	1.750 (44.5)	1.780 (45.2)	.625 (15.9)	.860 (21.8)	1.770 (45.0)	1 1/2-18
20	1 3/4-10 UNEF	1.200 (30.5)	2.130 (54.1)	2.280 (57.9)	.875 (22.2)	1.210 (30.7)	2.060 (52.3)	1 13/16-16

TABLE III

XM	Electroless Nickel
XW	Cadmium Olive Drab Over Electroless Nickel
XO	No Plating - Base Material Non-Conductive

APPLICATION NOTES

1. Metric dimensions (mm) are indicated in parentheses.

© 2013 Glenair, Inc. CAGE Code 06324 Printed in U.S.A.

MASTER SEAL

Self-Vulcanizing Sealing Tape

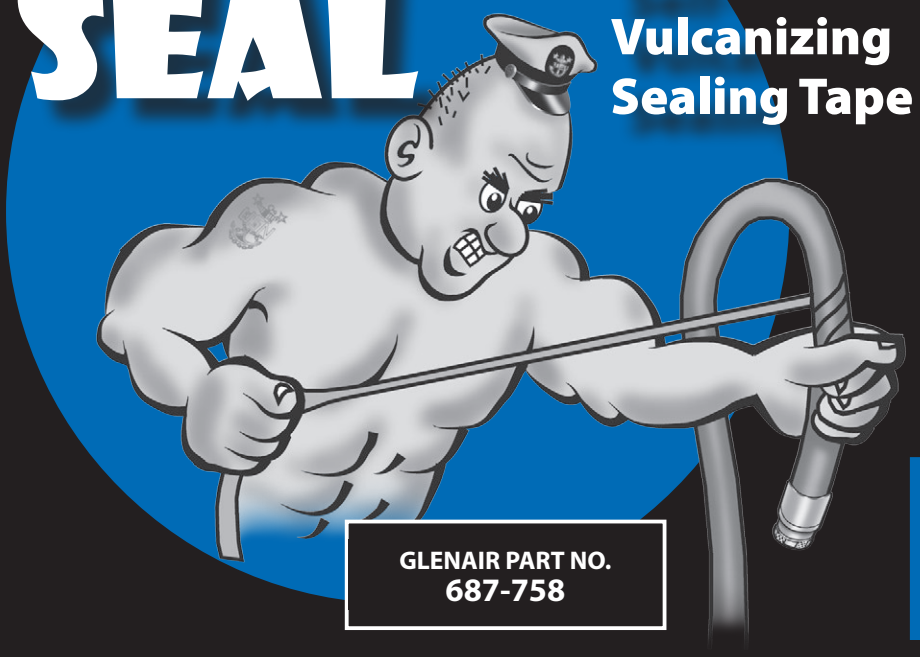

GLENAIR PART NO.
687-758

Halogen Free!

"BlueJacket" material sealing tape designed for temporary repairs to topside conduit; Stops water incursion into conduit until a permanent repair using MIL-PRF-24758A components can be made.

Glenair®

Get the U.S. Navy's

Handbook of Shipboard Electromagnetic Shielding Practices

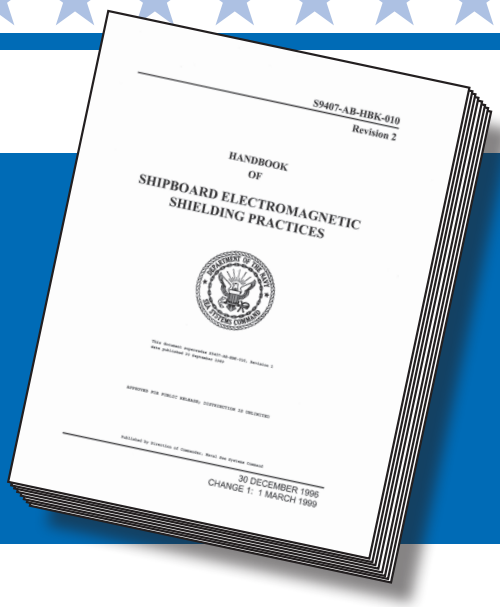

S9407-AB-HBK-010, Rev. 2

Available on Glenair's website

http://www.glenair.com/shipboard_connector_and_conduit_solutions/pdf/handbook_of_shipboard_electromagnetic_shielding_practices.pdf

Glenair is also qualified for the following GR2000 and RP2000 series fittings. Consult factory for drawings and specifications.

NAVSEA HANDBOOK S9407-AB-HBK-010	NAVSEA HANDBOOK 0967-LP-283-5010
GR2120-X-XX-EMXX-XX	GR2120-X-X-X-XXSN
GR2121-XXSM	GR2121-XXSN
GR2122-XXXSM (Style A)	GR2122-XXXSN (Style A)
GR2122-XXXESM (Style B)	GR2122-XXXESN (Style B)
GR2123-X-XX-EMXX	GR2123-X-X-XXSN
GR2124-X-EMXX-XX	GR2124-X-X-XXSN
GR2125-X-EMXX-XX	GR2125-X-X-XXSN
GR2126-EMXX	GR2126-XX
GR2127-EMXX	GR2127-XX
GR2128-EMXX	GR2128-XXSM
GR2129-EMXX	GR2129-XX
RP2100-EMXX-T(S) Telescoping/Short	RP2100-GXX-T(S)
RP2110-EMXX-T(S) Telescoping/Short	RP2110-GXX-T(S)
RP2120-EMXX-T(S) Telescoping/Short	RP2120-GXX-T(S)
RP2130-EMXX	RP2130-GXX
RP2140-EMXX	RP2140-GXX
RP2141-EMXX	RP2141-GXX
RP2200-EMXX	RP2200-GXX
RP2210-EMXX	RP2210-GXX
RP2311-XX-XX-XXSM	RP2311-XX-XX-XXSN
RP2321-XX-XXSM	RP2321-XX-XXSN
RP2330-XX-XX-N (No Letter Steel) SM	RP2330-XX-XX-N (No Letter Steel) SN
RP2340-XX-XX-XXSM	RP2340-XX-XX-XXSN
RP2350-XX-XX-XX-XSM	RP2350-XX-XX-XX-XSN
RP2360-XX-XX-XXSM	RP2360-XX-XX-XXSN
RP2400-XX-XXSM	RP2400-XX-XXSN
RP2411-XX-XXSM	RP2411-XX-XXSN
RP2420-XX-XXSM	RP2420-XX-XXSN
RP2430-XXSM	RP2430-XXSN
RP2431-XXSM	RP2431-XXSN
RP2440-XXSM	RP2440-XXSN
RP2500-XXSM	RP2500-XXSN
RP2610-XXSM	RP2610-XXSN
RP2620-XXSM	RP2620-XXSN
SM = Electroless Nickel Plating/Mild Steel	SN = Cadmium over Electroless Nickel/Mild Steel

© 2013 Glenair, Inc. CAGE Code 06324 Printed in U.S.A.

Selected Material and Finish Options for Glenair Connectors

Glenair Connectors: Selected Material and Finish Options								
Code	**Material**	**Finish**	**Finish Specification**	**Hrs. Salt Spray**	**Electrical Conductivity**	**Operating Temp. Range**	**RoHS**	**Notes**
M	Aluminum	Electroless Nickel	AMS-C-26074 Class 4 Grade B; ASTM-B-733, SC 2, Type IV	48	Conductive	-65 to +200°C	✓	Glenair's standard electroless nickel finish.
MT	Aluminum	Nickel-PTFE	GMF-002 Type II Class 1	500	Conductive	-65 to +175°C	✓	Approved for MIL-DTL-38999L and MIL-DTL-83513G.
NF	Aluminum	Cadmium, Olive Drab	SAE-AMS-QQ-P-416 Type II Class 2 over electroless nickel	500	Conductive	-65 to +175°C		Glenair's standard olive drab cadmium finish.
XB	Composite	Unplated Black		2000	Non-Conductive	-65 to +175°C	✓	Glenair's standard unplated composite.
XM	Composite	Electroless Nickel	AMS-C-26074 Class 4, Grade B	2000	Conductive	-65 to +200°C	✓	Glenair's standard electroless nickel finish over composite.
XW	Composite	Cadmium, Olive Drab	SAE-AMS-QQ-P-416 Type II Class 3 over electroless nickel	2000	Conductive	-65 to +175°C		Glenair's standard olive drab cadmium finish over composite.
Z1	Stainless Steel	Passivate	SAE AMS 2700	500	Conductive	-65 to +200°C	✓	Glenair's standard passivated stainless steel.
ZM	Stainless Steel	Electroless Nickel	AMS-C-26074 Class 1 Grade A		Conductive	-65 to +200°C	✓	Used on hermetic connectors. Use ZM for other applications.
ZN	Aluminum	Zinc-Nickel, Olive Drab	ASTM B841 Grade 5 over electroless nickel	500	Conductive	-65 to +175°C		Glenair's standard olive drab zinc-nickel finish.
ZR	Aluminum	Zinc-Nickel, Black	ASTM B841 Grade 5 over electroless nickel	500	Conductive	-65 to +175°C	✓	Glenair's RoHS compliant black zinc-nickel
ZU	Stainless Steel	Cadmium, Black	SAE-AMS-QQ-P-416 Type II Class 2	500	Conductive	-65 to +175°C		Glenair's standard black cadmium over stainless steel.

© 2013 Glenair, Inc.

GLENAIR, INC. • 1211 AIR WAY • GLENDALE, CA 91201-2497 • 818-247-6000 • FAX 818-500-9912
www.glenair.com
E-Mail: sales@glenair.com

Selected Material and Finish Options for Glenair Backshells

Glenair®

Glenair Backshells: Selected Material and Finish Options								
Code	**Material**	**Finish**	**Finish Specification**	**Hrs. Salt Spray**	**Electrical Conductivity**	**Operating Temp. Range**	**RoHS**	**Notes**
M	Aluminum	Electroless Nickel	AMS-C-26074 Class 4 Grade B; ASTM-B-733, SC 2, Type IV	48	Conductive	-65 to +200°C	✓	Glenair's standard electroless nickel finish.
MT	Aluminum	Nickel-PTFE	GMF-002 Type II Class 1	1000	Conductive	-65 to +175°C	✓	Approved for MIL-DTL-38999L and MIL-DTL-83513G.
NF	Aluminum	Cadmium, Olive Drab	SAE-AMS-QQ-P-416 Type II Class 2 over electroless nickel	1000	Conductive	-65 to +175°C		Glenair's standard olive drab cadmium finish.
P	Stainless Steel	Electro-deposited Nickel	SAE-AMS-QQ-N-290 Class 1 Grade F	500	Conductive	-65 to +200°C	✓	Use ZM for electroless nickel alternative.
XM	Composite	Electroless Nickel	AMS-C-26074	2000	Conductive	-65 to +175°C	✓	Glenair's standard electroless nickel finish over composite.
XO	Composite	Unplated Light Brown		2000	Non-Conductive	-65 to +175°C	✓	Not recommended for new projects. Use XB.
XW	Composite	Cadmium, Olive Drab	SAE-AMS-QQ-P-416 Type II Class 3 over electroless nickel	2000	Conductive	-65 to +175°C		Glenair's standard olive drab cadmium finish over composite.
Z1	Stainless Steel	Passivate	SAE-AMS-SAE-AMS-QQ-P-35 Type VI	1000	Conductive	-65 to +200°C	✓	Glenair's standard passivated stainless steel.
ZM	Stainless Steel	Electroless Nickel	AMS-C-26074 Class 1 Grade A		Conductive	-65 to +200°C	✓	Glenair's preferred nickel-plated stainless steel.
ZN	Aluminum	Zinc-Nickel, Olive Drab	ASTM B841 Grade 5 over electroless nickel	1000	Conductive	-65 to +175°C		Glenair's standard olive drab zinc-nickel finish.
ZR	Aluminum	Zinc-Nickel, Black	ASTM B841 Grade 5 over electroless nickel	500	Conductive	-65 to +175°C	✓	Glenair's RoHs compliant black zinc-nickel.
ZU	Stainless Steel	Cadmium, Black	SAE-AMS-QQ-P-416 Type II Class 3	1000	Conductive	-65 to +175°C		Glenair's standard black cadmium over stainless steel.

© 2013 Glenair, Inc.

GLENAIR, INC. • 1211 AIR WAY • GLENDALE, CA 91201-2497 • 818-247-6000 • FAX 818-500-9912
www.glenair.com
E-Mail: sales@glenair.com

COMMON ACCESSORY INTERFACE DATA TABLE

CONNECTOR DESIGNATOR											A THREAD*	B	C	D	E
A	C*	D	E	F	G	H	J	K	L	S	REFERENCE	DIA MAX	DIA MAX	DIA MAX	DIA MAX
		08	08	08 [9]				08	08	08	7/16 – 28 UNEF	.590 (15.)	.650 (16.5)	.770 (19.6)	.690 (17.5)
						09 [A]					M12 x 1 – 6H	.650 (16.5)	.770 (19.6)		.940 (24.8)
08											1/2 – 20 UNF	.650 (16.5)	.650 (16.5)		.690 (17.5)
							08 [A]	10			1/2 – 28 UNEF	.650 (16.5)	.770 (19.6)	.770 (19.6)	
03		10	10	10 [11]				11	10	10	9/16 – 24 UNEF	.720 (18.3)	.770 (19.6)	.890 (22.6)	.820 (20.8)
						11 [B]					M15 x 1 – 6H	.770 (19.6)	.820 (20.8)		1.060 (26.9)
10								12 [13]			5/8 – 24 UNEF	.770 (19.6)	.770 (19.6)	.890 (22.6)	.820 (20.8)
							10 [B]				5/8 – 28 UN	.770 (19.6)	.890 (22.6)		
		12		12 [13]					12	12	11/16 – 24 UNEF	.840 (21.3)	.890 (22.6)	1.020 (25.9)	.940 (23.8)
						13 [C]					M18 x 1 – 6H	.890 (22.6)	.940 (23.9)		1.170 (29.7)
12 [7]	12		12		11 [A]			14 [15]			3/4 – 20 UNEF	.970 (24.6)	.940 (23.9)	1.020 (25.9)	.940 (23.8)
		14	14	14 [15]					14	14	13/16 – 20 UNEF	.970 (24.6)	1.020 (29.2)	1.150 (29.2)	1.060 (26.9)
						15 [D]					M22 x 1 – 6H	1.030 (26.2)	1.070 (26.2)		1.290 (32.7)
14 [12]	14				13 [B]			16 [17]			7/8 – 20 UNEF	1.090 (27.7)	1.020 (25.9)	1.150 (29.2)	1.060 (26.9)
							14 [D]				7/8 – 28 UN	1.030 (26.2)	1.150 (29.2)		
		16	16	16 [17]					16	16	15/16 – 20 UNEF	1.090 (27.7)	1.150 (29.2)	1.260 (32.0)	1.170 (29.7)
						17 [E]					M25 x 1 – 6H	1.150 (29.2)	1.210 (30.7)		1.420 (36.1)
16 [19]	16				15 [C]			18			1 – 20 UNEF	1.220 (29.2)	1.210 (30.7)	1.230 (31.2)	1.170 (29.7)
							16 [E]				1 - 28 UN	1.150 (29.2)	1.360 (34.5)		
18 [27]		18	18	18 [19]					18	18	1 1/16 – 18 UNEF	1.220 (31.0)	1.230 (31.2)	1.400 (35.6)	1.290 (32.7)
						19 [F]					M28 x 1 – 6H	1.280 (32.5)	1.360 (34.5)		1.540 (39.1)
	18				17 [D]			20			1 1/8 – 18 UNEF	1.340 (34.0)	1.360 (34.5)	1.360 (34.5)	
							18 [F]				1 1/8 – 28 UN	1.280 (32.5)	1.480 (37.6)		
20 [37]		20	20	20 [21]					20	20	1 3/16 – 18 UNEF	1.340 (34.0)	1.360 (34.5	1.530 (38.9)	1.420 (36.0)
						21 [G]					M31 x 1 – 6H	1.410 (35.8)	1.480 (37.6)		1.670 (42.4)
	20				19 [E]			22			1 1/4 – 18 UNEF	1.470 (37.3)	1.530 (38.9)	1.480 (37.6)	
							20 [G]				1 1.4 – 28 UN	1.410 (35.8)	1.600 (40.6)		
22		22	22	22 [23]					22	22	1 5/16 – 18 UNEF	1.470 (37.3	1.480 (37.6)	1.600 (40.6)	1.540 (39.1)
						23 [H]					M34 x 1 - 6H	1.530 (38.9)	1.600 (40.6)		2.010 (51.1)
	22							24			1 3/8 – 18 UNEF	1.590 (40.4)		1.600 (40.6)	
							22 [H]				1 3/8 – 28 UN	1.530 (38.9)	1.730 (43.9)		
24		24	24	24 [25]	23 [F]				24	24	1 7/16 – 18 UNEF	1.590 (40.4)	1.730 (43.9)	1.940 (49.3)	1.660 (42.2)
						25 [J]					M37 x 1 – 6H	1.660 (42.2)	1.700 (43.2)		2.120 (53.8)
61											1 1/2 – 18 UNEF	1.660 (42.2)	1.670 (42.4)		
							24 [J]				1 1/2 – 28 UN	1.660 (42.2)	1.940 (49.3)		
					25 [G]						1 9/16 – UNEF		1.820 (46.2)		
	24							28			1 5/8 – UNEF	1.840 (46.7)		1.940 (49.3)	
28											1 3/4 – 18 UNS	1.970 (50.0)	1.970 (50.0)		2.010 (51.1)
	28				29 [H]			32			1 7/8 – 16 UN	2.090 (53.1)	2.190 (55.6)	2.190 (55.6)	
32											2 – 18 UNS	2.280 (57.9)	2.220 (56.4)		2.260 (57.4)
	32				33 [J]						2 1/16 – 16 UNS	2.340 (59.4)	2.440 (62.0)	2.440 (62.0)	
								36			2 1/8 – 16 UN	2.340 (59.4)		2.440 (62.0)	
36											2 1/4 – 16 UN	2.530 (64.3)	2.47 (62.7)		2.530 (64.3)
	36										2 5/16 – 16 UNS	2.590 (65.8)		2.690 (68.3)	
								40			2 3/8 – 16 UN	2.590 (65.8)		2.690 (68.3)	
40											2 1/2 – 16 UN	2.780 (70.6)	2.720 (69.1)		3.040 (77.2)
	40										2 5/8 – 16 UN	2.910 (73.9)		2.930 (74.4)	
44											2 3/4 – 16 UN	3.030 (77.0)	2.970 (75.4)		
	44										2 7/8 – 16 UN	3.160 (80.3)			
48											3 – 16 UN	3.220 (81.8)	3.220 (81.8)		
	48										3 1/16 – 16 UN	3.410 (86.6)			

* Code C, MIL-C-22992, Left-Hand Thread. Connector designations depicted thus [ ] are for reference only and are not to be used in part number development.

BACKSHELL INTERFACE STANDARDS

DESIG.	SPEC.	SERIES
A	MIL-DTL-5015	MS3400
	MIL-DTL-264822	
	AS81703	3
	MIL-DTL-83723I & III	
	40M39569	
	DEF 5326-3	
	EN 2997, 3646	
	ESC 10, 11	
	LN 29504	
	NFC93422	HE302
	PAN 6432-1, -2	

DESIG.	SPEC.	SERIES
A	PATT 602	
B	MIL-DTL-5015	MS3100
C	MIL-C-22992	MS173XX
D	MIL-DTL-264821	
E	MIL-DTL-26500	Aluminum
F	MIL-DTL-38999I & II	
	40M38277	
	PAN 6433-1	
	PATT 614	
	PATT 616	
	NFC93422	HE308, 9

DESIG.	SPEC.	SERIES
G	MIL-C-28840	
H	MIL-DTL-38999III & IV	
	EN3645	
J	MIL-C-81511	1, 2, 3 & 4
	VG95329	
K	MIL-DTL-83723II	

DESIG.	SPEC.	SERIES
L	EN3372	
	JN 1003	
	LN 29729	
	NFC93422	HE306
	PAN 6433-2	
	PATT 615	
	VG 96912	
S	PATT 105	
	PATT 603	
	PATT 608	

WHY CHOOSE GLENAIR?

Outstanding Customer Service!

Plenty of Raw Materials!

In-House Assembly!

Abundant Machining Capacity!

Huge "Same-Day" Inventory!

Glenair®

Out of This World

INTERCONNECT SOLUTIONS

Glenair, Inc.
1211 Air Way • Glendale, California • 91201-2497
Telephone: 818-247-6000 • Fax: 818-500-9912 • sales@glenair.com
www.glenair.com

Glenair Power Products Group
860 N. Main Street Extension
Wallingford, CT
06492
Telephone: 203-741-1115
Facsimile: 203-741-0053
sales@glenair.com

Glenair UK Ltd
40 Lower Oakham Way
Oakham Business Park
P.O. Box 37, Mansfield
Notts, NG18 5BY England
Telephone: +44-1623-638100
Facsimile: +44-1623-638111
sales@glenair.co.uk

Glenair Microway Systems
7000 North Lawndale Avenue
Lincolnwood, IL
60712
Telephone: 847-679-8833
Facsimile: 847-679-8849

Glenair Nordic AB
Gustav III : S Boulevard 46
S - 169 27 Solna
Sweden
Telephone: +46-8-50550000
Facsimile: +46-8-50550001
sales@glenair.se

Glenair Electric GmbH
Schaberweg 28
61348 Bad Homburg
Germany
Telephone: 06172 / 68 16 0
Facsimile: 06172 / 68 16 90
germany@glenair.com

Glenair Iberica
C/ La Vega, 16
45612 Velada
Spain
Telephone: +34-925-89-29-88
Facsimile: +34-925-89-29-87
sales@glenair.es

Glenair Italia S.p.A.
Via Del Lavoro, 7
40057 Quarto Inferiore –
Granarolo dell'Emilia
Bologna, Italy
Telephone: +39-051-782811
Facsimile: +39-051-782259
info@glenair.it

Glenair France SARL
7, Avenue Parmentier
Immeuble Central Parc #2
31200 Toulouse
France
Telephone: +33-5-34-40-97-40
Facsimile: +33-5-61-47-86-10
sales@glenair.fr

© 2013 Glenair, Inc.

Printed in U.S.A.